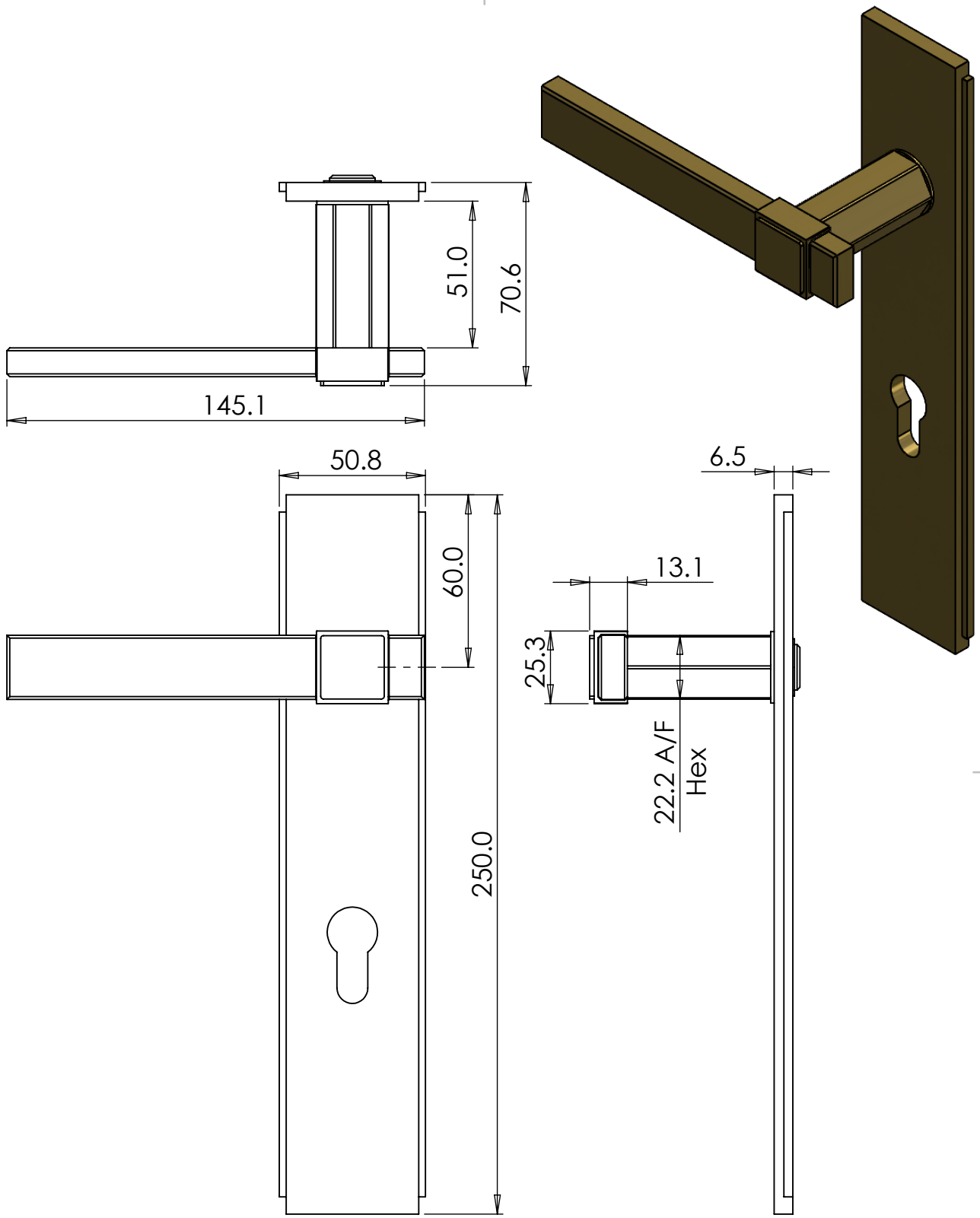

dortrend	FINISH: Antique/Satin	DEBURR AND BREAK SHARP EDGES IF IN DOUBT, ASK	DO NOT SCALE DRAWING REVISION 1 Dortrend International Ltd

	NAME	SIGNATURE	DATE
DRAWN	P.Roberts		13/12/2024
CHK'D			
APPV'D			

Dortrend International Ltd
86A Blackpole Trading Estate West
Worcester
WR3 8TJ

Unless Otherwise Specified:
Dimensions in mm
Tolerances:
Linear: ±0.2 mm
Angular: ±0.5°

MATERIAL: Brass

WEIGHT: 1061 g

TITLE: Art Deco: Long Plate 1 - Stem 1 - Lever 7

DWG NO. ARTDECO/GA/LP1-S1-L7

A4

SCALE:1:2

SHEET 1 OF 1