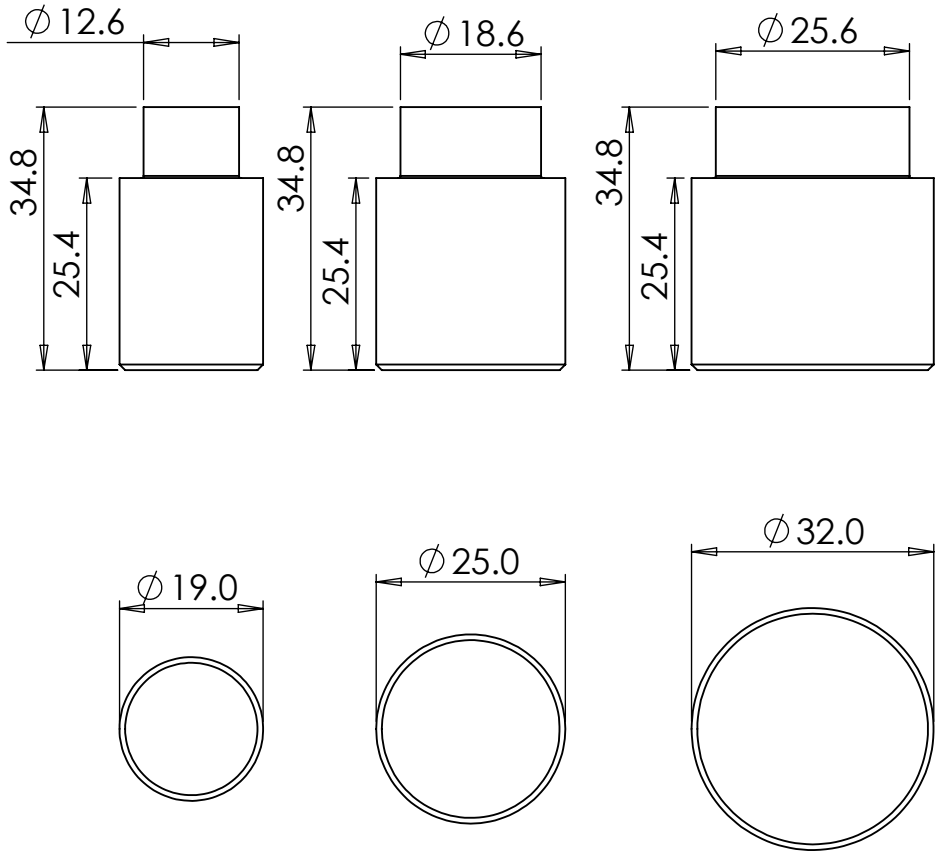

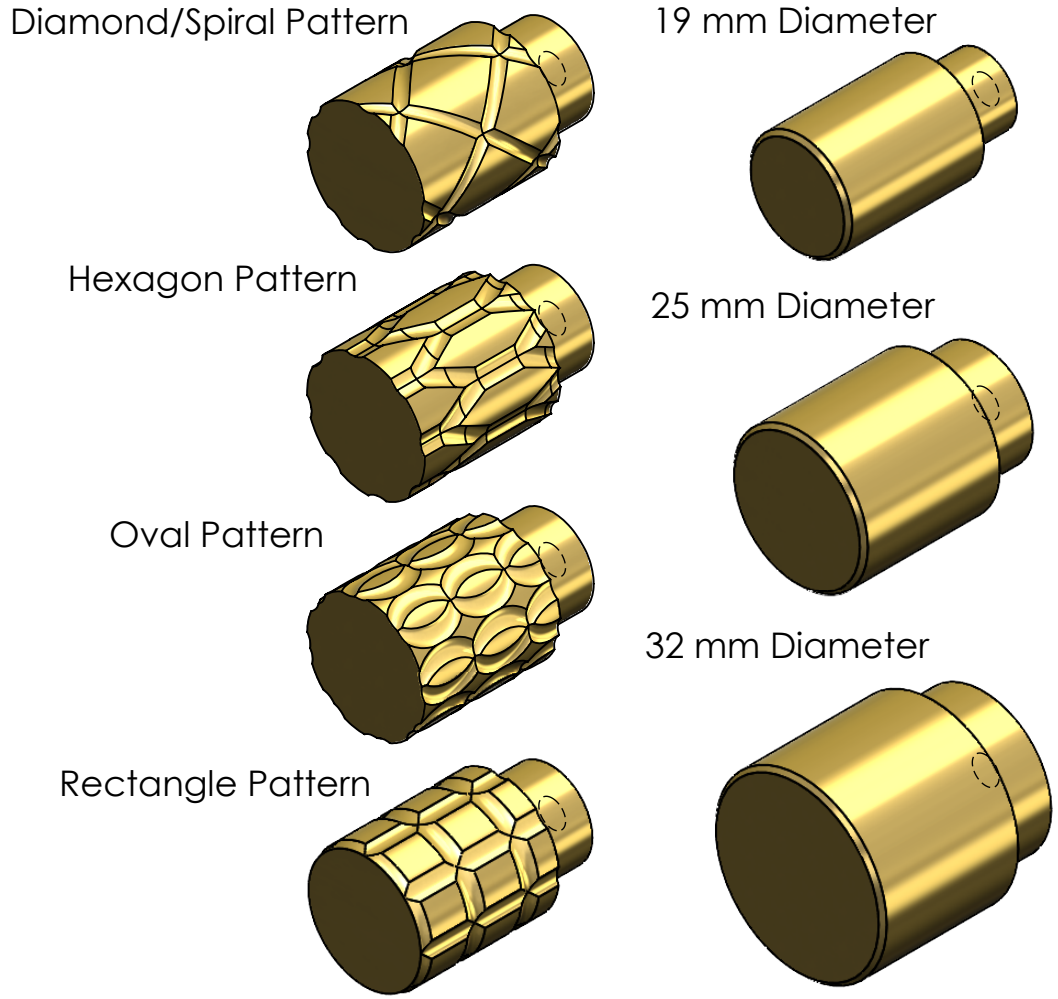

Not shown: M5 Tapped Hole for fixing

dortrend	FINISH: Satin/Aged	DEBURR AND BREAK SHARP EDGES IF IN DOUBT, ASK	DO NOT SCALE DRAWING — REVISION 1
			Dortrend International Ltd

	NAME	SIGNATURE	DATE
DRAWN	P.Roberts		09/04/2025
CHK'D			
APPV'D			

Dortrend International Ltd
86A Blackpole Trading Estate West
Worcester
WR3 8TJ

Unless Otherwise Specified:
Dimensions in mm
Tolerances:
Linear: ±0.2 mm
Angular: ±0.5°

TITLE: Sadler Cupboard Knob

MATERIAL: Brass
19, 25 or 32 mm Diameter

DWG NO. Sadler Cupboard Knobs — A4

WEIGHT: 69 g ∅19, 125 g ∅25, 212 g ∅32 — SCALE:1:1 — SHEET 1 OF 1