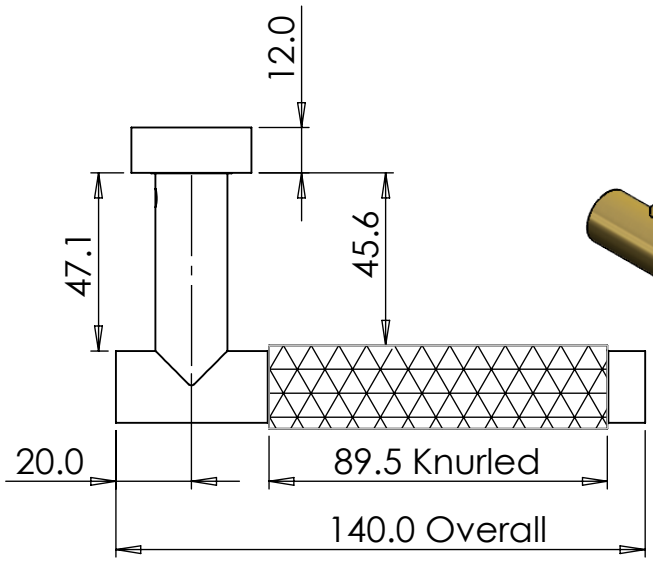

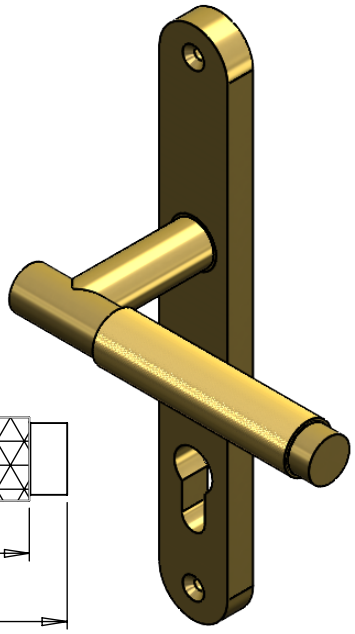

Isometric View
Scale 1:2.5

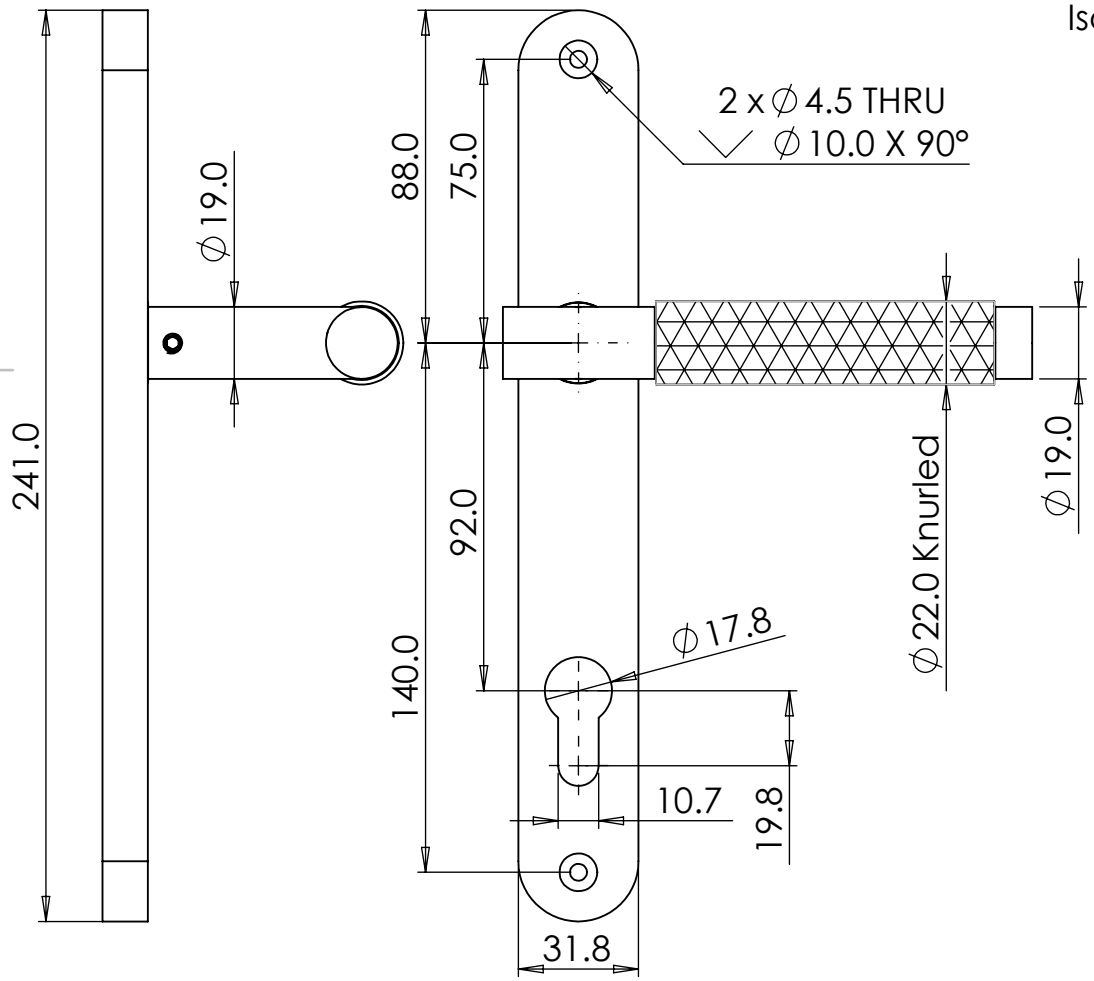

dortrend	FINISH: Satin & Knurled Lever	DEBURR AND BREAK SHARP EDGES IF IN DOUBT, ASK	DO NOT SCALE DRAWING REVISION 1 Dortrend International Ltd

	NAME	SIGNATURE	DATE
DRAWN	P.Roberts		12/03/2025
CHK'D			
APPV'D			

Dortrend International Ltd
86A Blackpole Trading Estate West
Worcester
WR3 8TJ

Unless Otherwise Specified:
Dimensions in mm
Tolerances:
Linear: ±0.2 mm
Angular: ±0.5°

MATERIAL: Brass

WEIGHT: 1123 g

TITLE: ESPAG Designer (241x32 mm Slot) + Knurled T-Bar Lever: Front Fixing

DWG NO. ESPAGDES/241x32SL

A4

SCALE:1:2

SHEET 1 OF 2

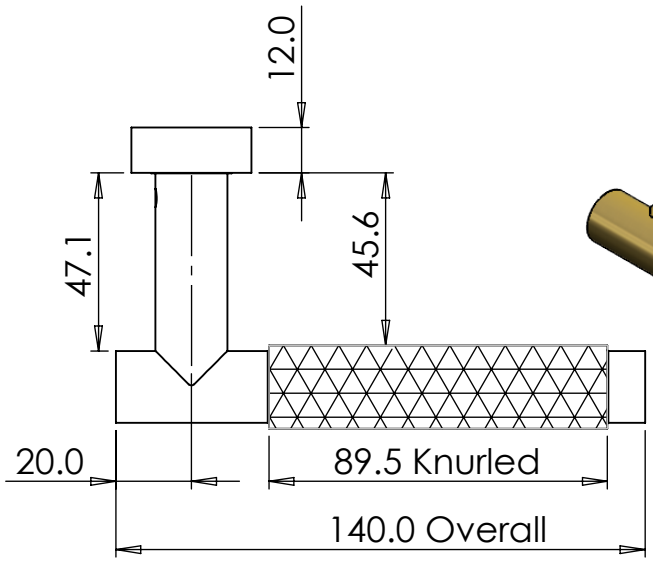

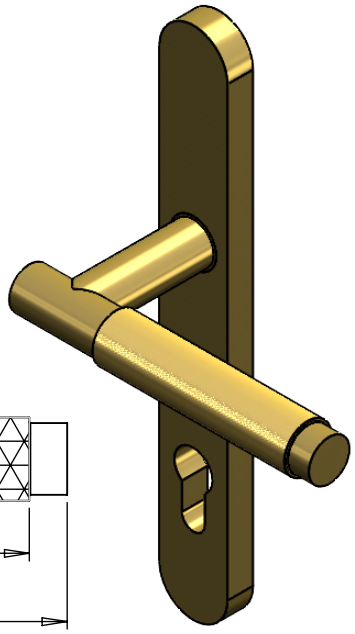

Isometric View
Scale 1:2.5

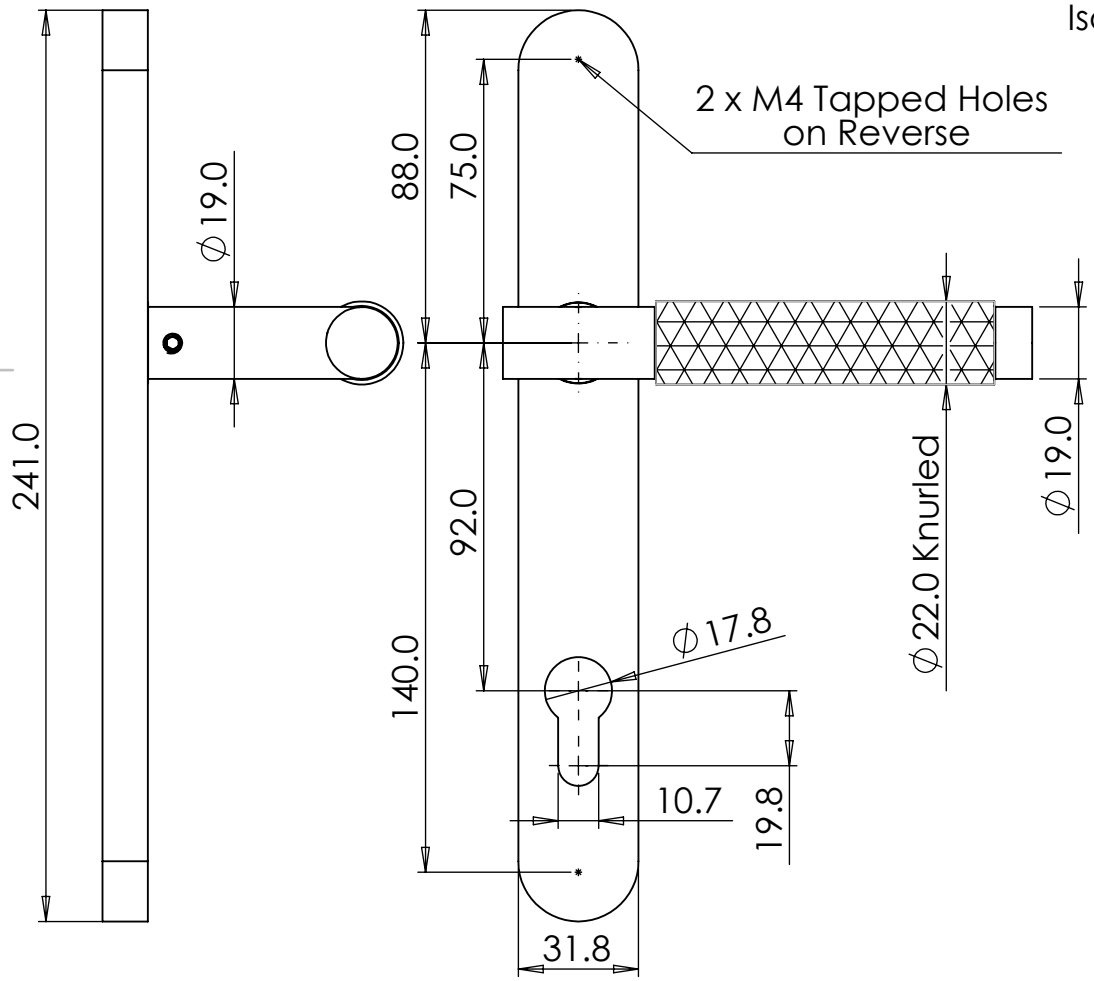

dortrend	FINISH: Satin & Knurled Lever	DEBURR AND BREAK SHARP EDGES IF IN DOUBT, ASK	DO NOT SCALE DRAWING REVISION 1 Dortrend International Ltd

	NAME	SIGNATURE	DATE
DRAWN	P.Roberts		12/03/2025
CHK'D			
APPV'D			

Dortrend International Ltd
86A Blackpole Trading Estate West
Worcester
WR3 8TJ

Unless Otherwise Specified:
Dimensions in mm
Tolerances:
Linear: ±0.2 mm
Angular: ±0.5°

MATERIAL: Brass

WEIGHT: 1127 g

TITLE: ESPAG Designer (241x32 mm Slot) + Knurled T-Bar Lever: Back Fixing

DWG NO. ESPAGDES/241x32SL

A4

SCALE:1:2

SHEET 2 OF 2