Isometric View
Scale 1.5:1

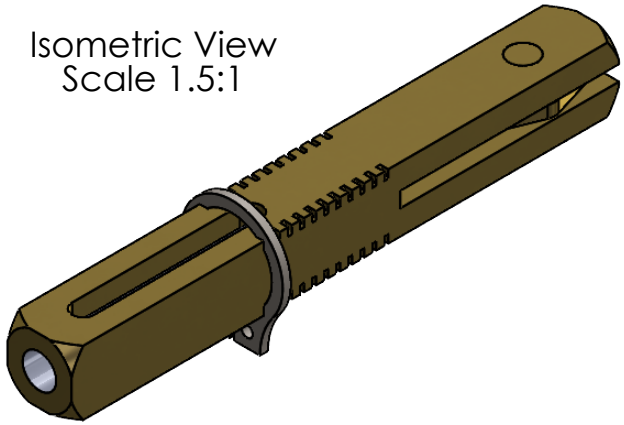

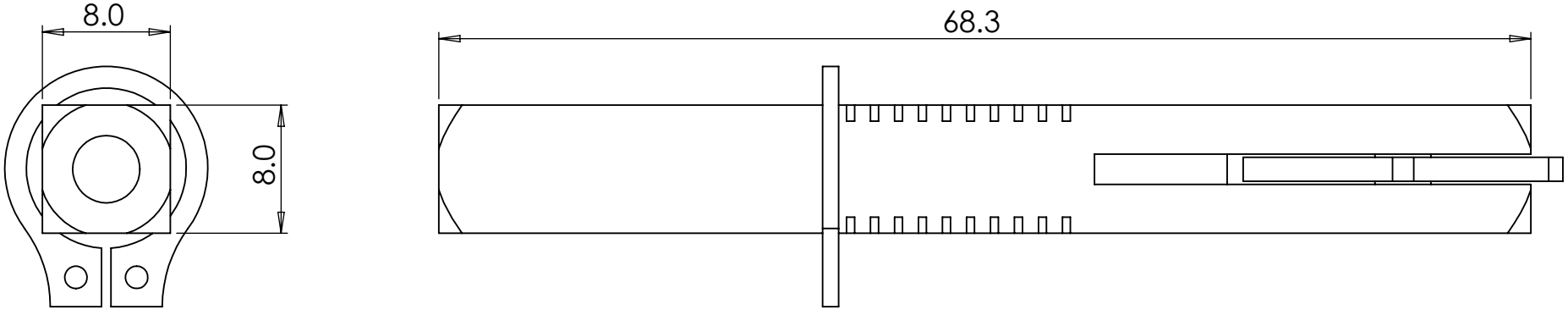

dortrend	FINISH: As Machined	DEBURR AND BREAK SHARP EDGES IF IN DOUBT, ASK	DO NOT SCALE DRAWING / REVISION 1
			Dortrend International Ltd

	NAME	SIGNATURE	DATE
DRAWN	P.Roberts		10/10/2024
CHK'D			
APPV'D			

Dortrend International Ltd
86A Blackpole Trading Estate West
Worcester
WR3 8TJ

Unless Otherwise Specified:
Dimensions in mm
Tolerances:
Linear: ±0.2 mm
Angular: ±0.5°

MATERIAL: Brass

WEIGHT: 27 g

TITLE: Half Spindle YGCSP08ZP

DWG NO. YGCSP08ZP

A4

SCALE:2.5:1

SHEET 1 OF 1