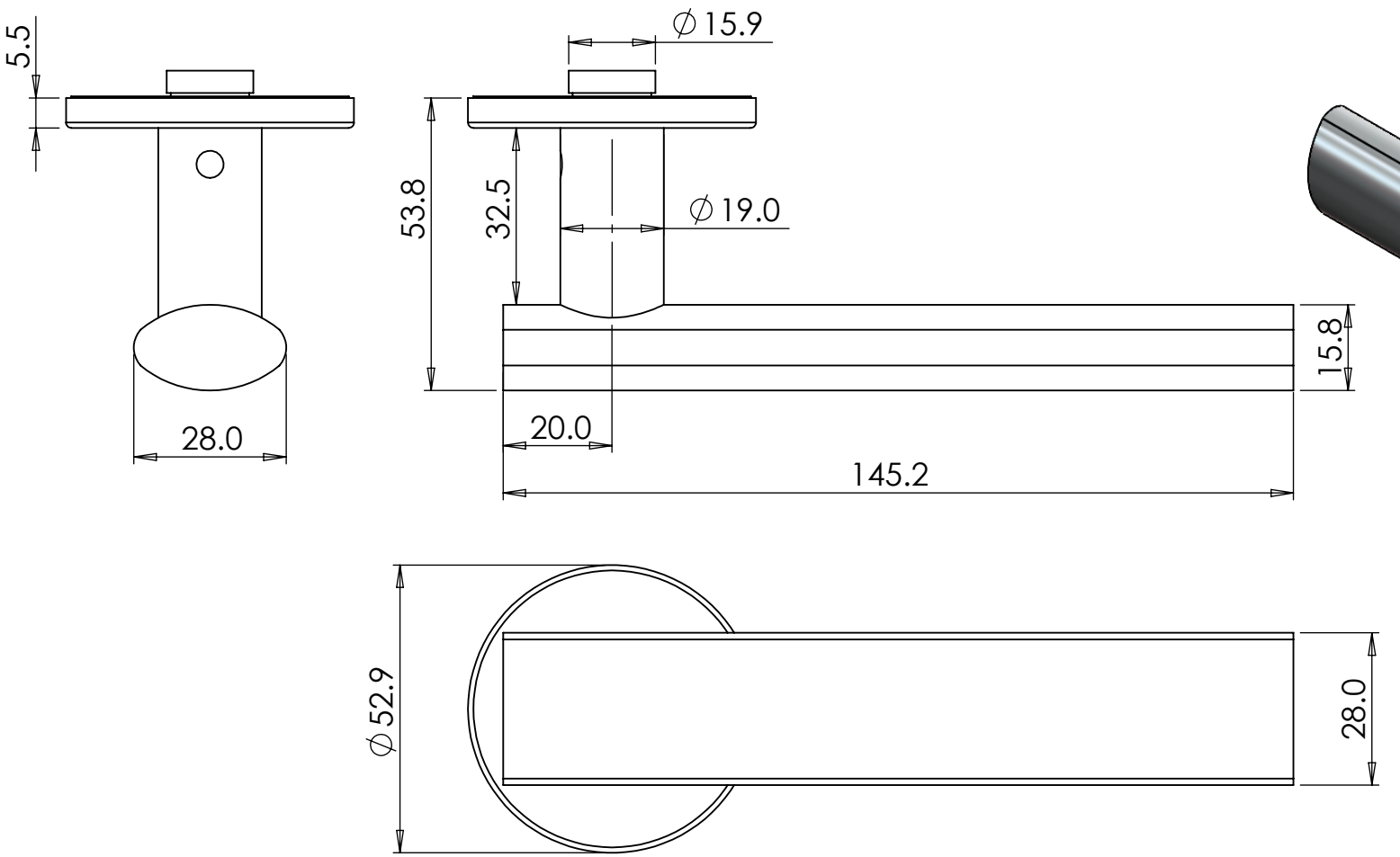

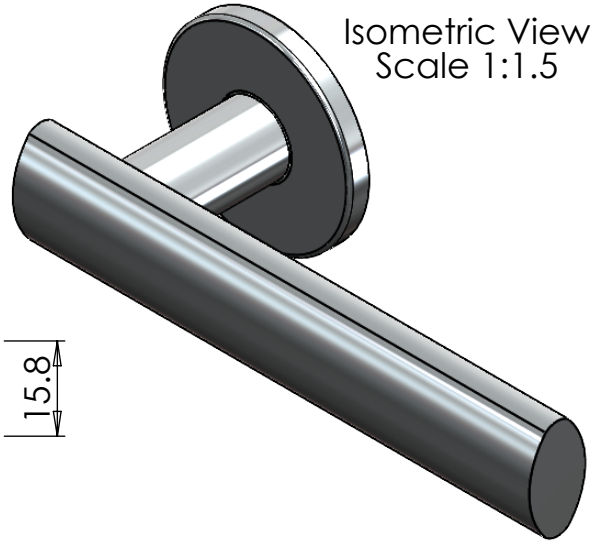

dortrend	FINISH: Mirror Polish		DEBURR AND BREAK SHARP EDGES IF IN DOUBT, ASK	DO NOT SCALE DRAWING	REVISION 1
				Dortrend International Ltd	
	NAME	SIGNATURE	DATE	Unless Otherwise Specified: Dimensions in mm Tolerances: Linear: ±0.2 mm Angular: ±0.5°	TITLE: Oval Handle on Rose
DRAWN	P.Roberts		10/12/2024		
CHK'D					
APPV'D					
Dortrend International Ltd 86A Blackpole Trading Estate West Worcester WR3 8TJ				MATERIAL: Chrome	DWG NO. Oval Handle — A4
				WEIGHT: 487 g	SCALE:1:1.25 — SHEET 1 OF 1