Isometric Views
Scale 1:2.5

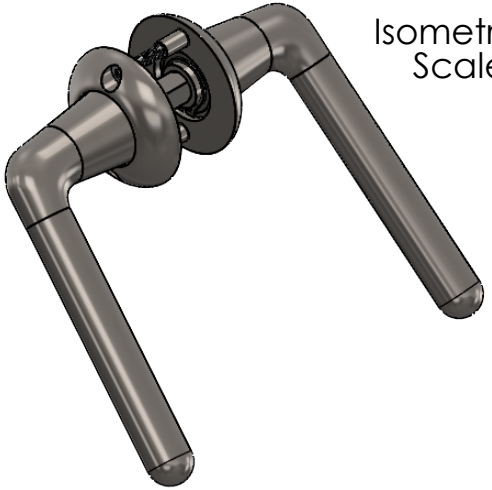

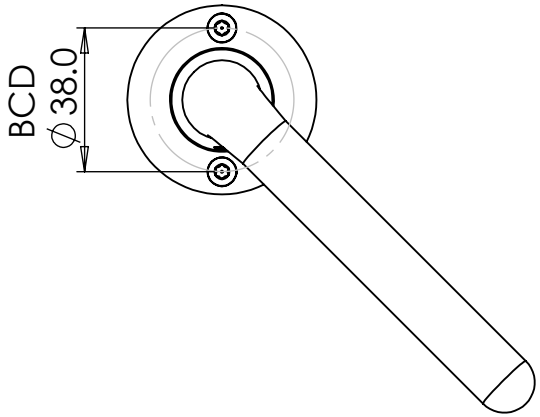

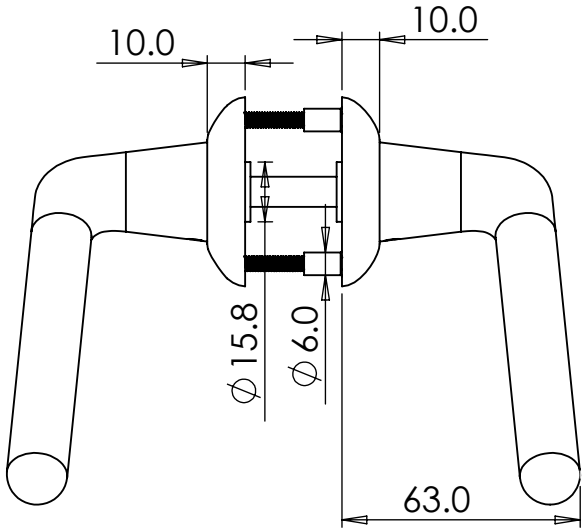

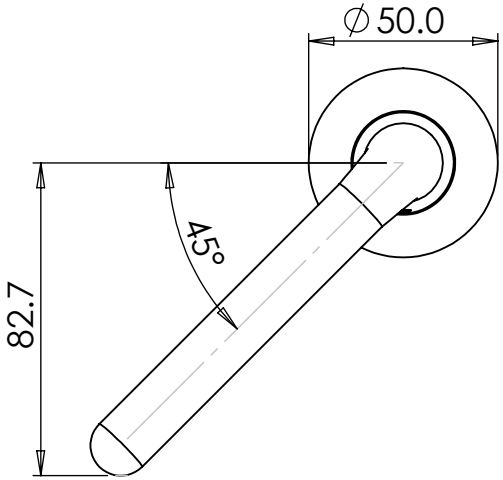

dortrend	FINISH: Satin	DEBURR AND BREAK SHARP EDGES IF IN DOUBT, ASK	DO NOT SCALE DRAWING — REVISION 1
			Dortrend International Ltd

	NAME	SIGNATURE	DATE
DRAWN	P.Roberts		31/10/2024
CHK'D			
APPV'D			

Dortrend International Ltd
86A Blackpole Trading Estate West
Worcester
WR3 8TJ

Unless Otherwise Specified:
Dimensions in mm
Tolerances:
Linear: ±0.2 mm
Angular: ±0.5°

TITLE:
ANTNS7EXT on 50 mm Rose (Pair)

MATERIAL: Stainless Steel

DWG NO. ANTNS7EXTSSS

A4

WEIGHT: 806 g

SCALE:1:2

SHEET 1 OF 1