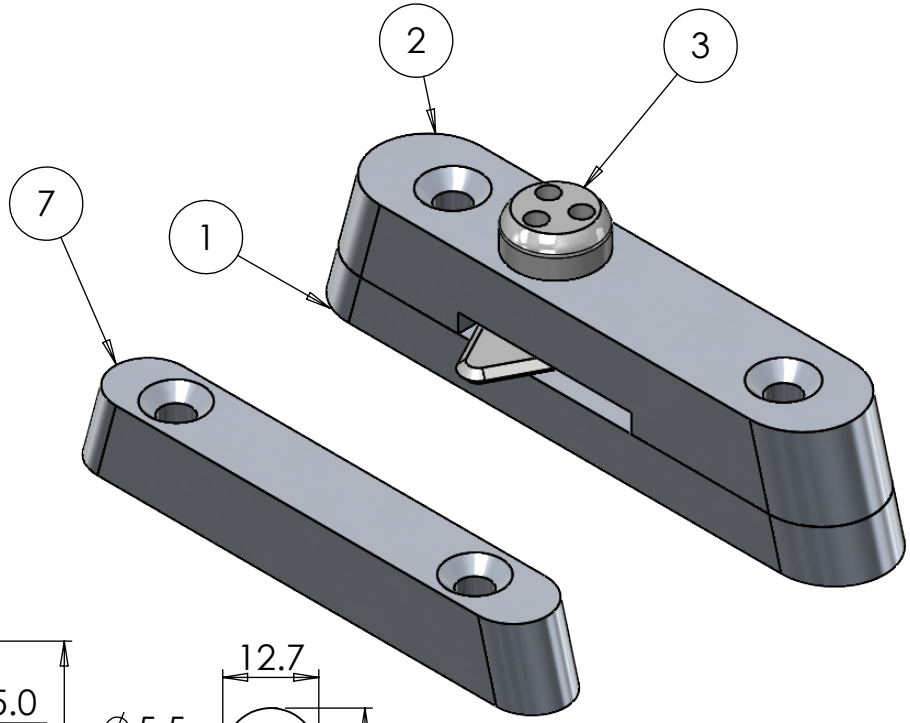

ITEM NO.	PART NUMBER	DESCRIPTION	QTY.
1	QANTWIN10BASE		1
2	QANTWIN10TOP		1
3	M8x25 Tripin Screw - QANTWIN10SCREW Modified	M8 x 25 Tri-Pin Screw, Modified with Square End	1
4	QANTWIN10LOCK		1
5	97161A120	∅2.5 x 16 mm Roll Pin	2
6	92125A130	M3 x 10 Hex Drive Flat Head Screw	2
7	QANTWIN10KEEP		1

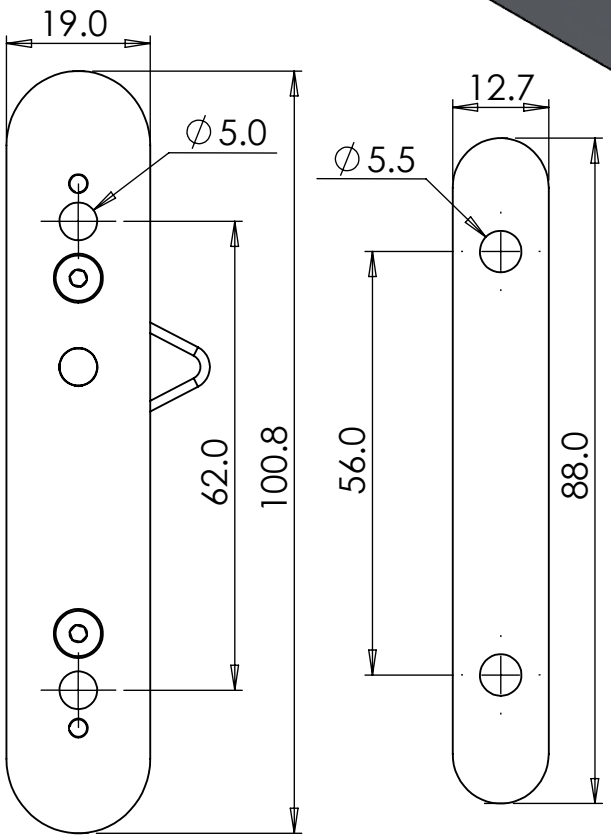

dortrend

FINISH: Polished

DEBURR AND BREAK SHARP EDGES

IF IN DOUBT, ASK

DO NOT SCALE DRAWING

REVISION 1

Dortrend International Ltd

	NAME	SIGNATURE	DATE
DRAWN	P.Roberts		07/06/2024
CHK'D			
APPV'D			

Dortrend International Ltd
86A Blackpole Trading Estate West
Worcester
WR3 8TJ

Unless Otherwise Specified:
Dimensions in mm
Tolerances:
Linear: ±0.2 mm
Angular: ±0.5°

TITLE:

Casement Fastener with Tri-Pin Screw

MATERIAL: Aluminium

DWG NO. QANTWIN10AS

A4

WEIGHT: 122 g

SCALE:1:1

SHEET 2 OF 2