Model: Regency CG-U 8768



Features

- cUPC
- High-grade 304 stainless steel
- Classic rectangular undermount sink
- Sound-DAMPENING pads
- Seamless undermount lip
- High tensile strength
- Drain Opening: Centered 3-1/2" opening
- Available color: natural stainless steel color

Product measurements

- Inside dimension: 28" x 16"
- Overall dimensions: 30" x 18"
- Bowl depth: 9-1/2"
- Weight: 15 lbs (Shipping weight: 18 - 20 lbs)*

Codes/Standards

File No.: 8864
ASME A112.19.2-2018
/CSA B45.1-18

Undermount
Lavatory

OVER FLOW
Includes
Overflow

Spec and Installation Notes

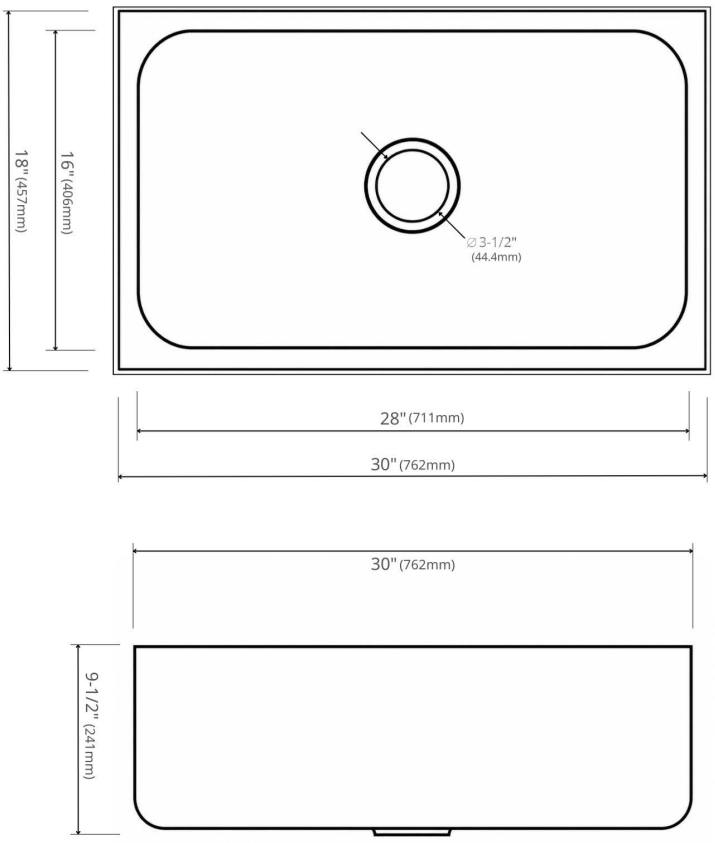

Recommended cut-out size:

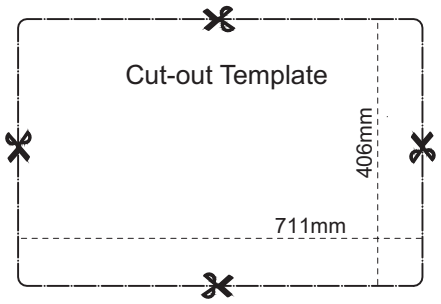

Recommended installation:

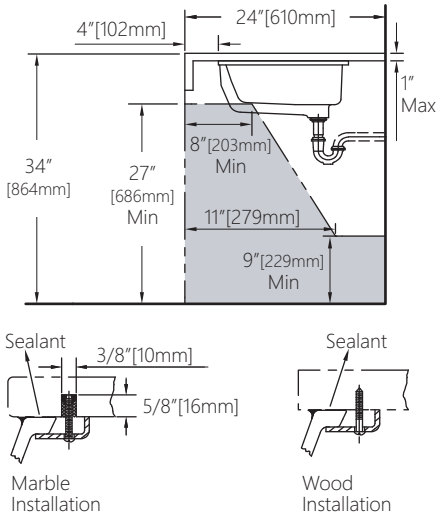

*Shipping dimension: 32" (L) x 20" (W) x 12" (H)