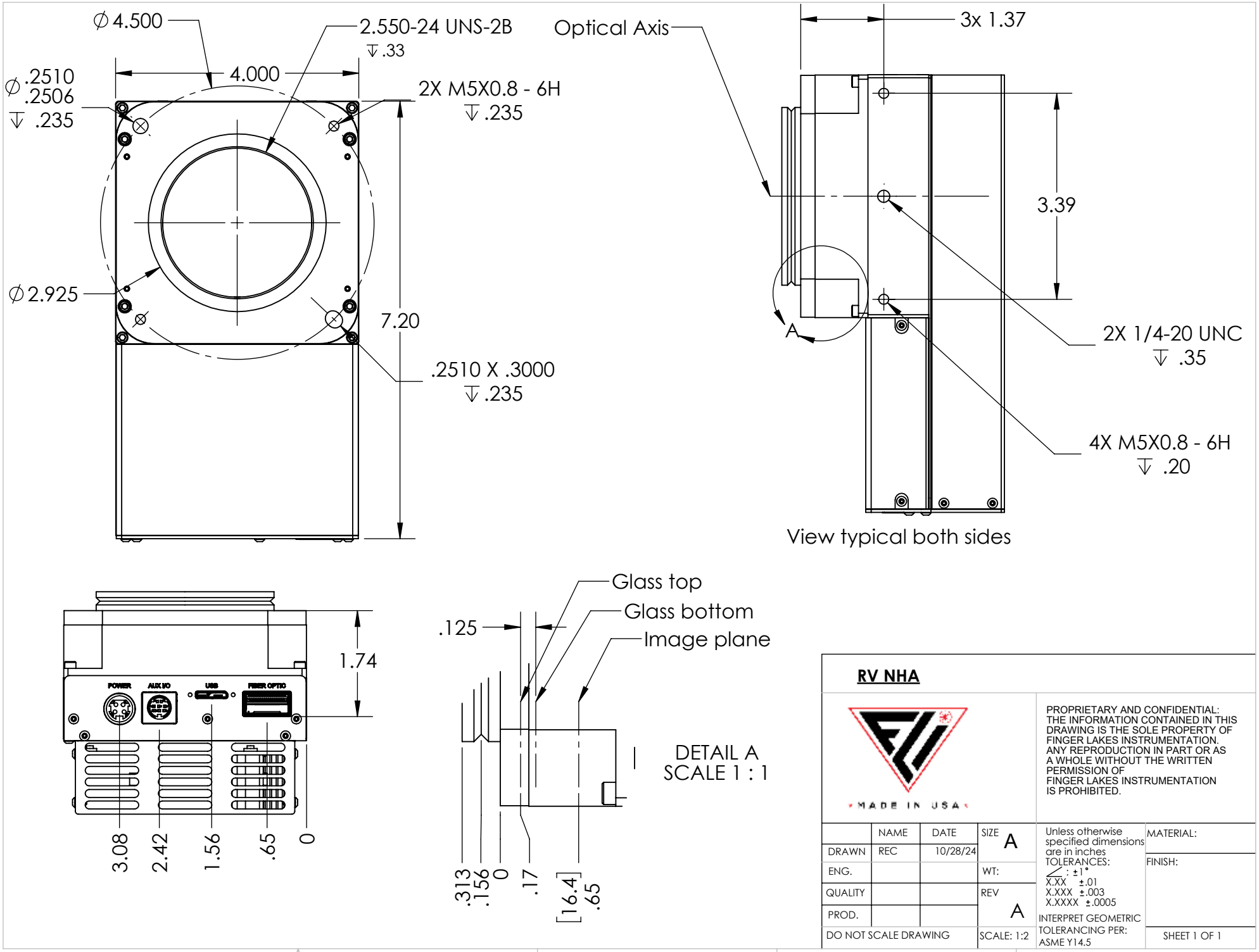
∅4.500
2.550-24 UNS-2B
↧.33
4.000
∅.2510
.2506
↧ .235
2X M5X0.8 - 6H
↧.235
∅2.925
7.20
.2510 X .3000
↧.235
Optical Axis
3x 1.37
3.39
A
2X 1/4-20 UNC
↧ .35
4X M5X0.8 - 6H
↧ .20
View typical both sides
POWER
AUX I/O
USB
FIBER OPTIC
1.74
3.08
2.42
1.56
.65
0
Glass top
Glass bottom
Image plane
.125
.313
.156
0
.17
[16.4]
.65
DETAIL A
SCALE 1 : 1
RV NHA
MADE IN USA
PROPRIETARY AND CONFIDENTIAL:
THE INFORMATION CONTAINED IN THIS DRAWING IS THE SOLE PROPERTY OF FINGER LAKES INSTRUMENTATION. ANY REPRODUCTION IN PART OR AS A WHOLE WITHOUT THE WRITTEN PERMISSION OF FINGER LAKES INSTRUMENTATION IS PROHIBITED.
NAME
DATE
DRAWN
REC
10/28/24
ENG.
QUALITY
PROD.
DO NOT SCALE DRAWING
SIZE
A
WT:
REV
A
SCALE: 1:2
Unless otherwise specified dimensions are in inches
TOLERANCES:
∠ : ±1°
X.XX ±.01
X.XXX ±.003
X.XXXX ±.0005
INTERPRET GEOMETRIC TOLERANCING PER:
ASME Y14.5
MATERIAL:
FINISH:
SHEET 1 OF 1
5
4
3
2
1