FINGER LAKES INSTRUMENTATION

KEPLER CMOS CAMERA

KL400 FI.

MADE IN USA

DATASHEET flicamera.com/models/kl400-fi

PRODUCT PAGE

1.5 e- Noise RMS

The Kepler KL400 FI provides high sensitivity, ultra-low noise with high frame rates, all at a game-changing price to performance ratio. The front illuminated version does not have microlenses.



Also available with 45mm shutter

KEY SPECIFICATIONS

SENSOR	SIZE (MM)	RESOLUTION	PIXEL SIZE
GPixel GSense400	22.5 X 22.5 mm (31.9 mm)	2048 x 2048	11 x 11 µm

FULL WELL	READ NOISE	DARK CURRENT	BIT DEPTH
120000 electrons	1.5 e-	0.15 eps at -20C	16 bit

TECHNICAL DATA

Sensor Type	Front Illuminated CMOS	**Sensor**	GPixel GSense400
Shutter Type	Rolling	**Active Pixels**	2048 x 2048
Pixel Size (microns)	11 x 11 µm	**Imaging Area (Diagonal)**	22.5 X 22.5 mm (31.9 mm)
Full Well Capacity (e-)	120000 electrons	**Typical Readout Noise**	1.5 e-
Dynamic Range	97.7 dB	**Frame Rate (fps)**	24 HDR; 48 LDR
Cooling Method	Air and Liquid [1]	**Max. Cooling (Air)**	45°C below ambient
Temperature Stability	0.1°C	**Dark Current (typical)**	0.15 eps at -20C
Interface	USB 3.0	**Data Bit Depth**	16 bit
Optional Shutter	45 mm	**Optional Mounts**	Nikon or Canon
Subarray Readout	Standard	**External Trigger In/Out**	Standard

SDK / Software	Kepler SDK (Open Source) /	**Weight**	3 lbs (1.3 kg)

TECHNICAL FIGURES

Absolute quantum efficiency

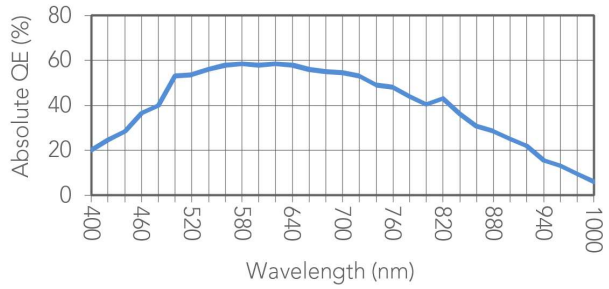

Mechanical outline

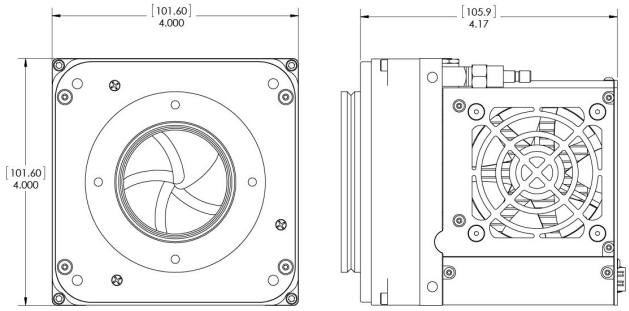

NOTES AND OPERATING CONDITIONS

1 Liquid circulation connectors sold separately.

2 16-bit data merged from two 12 bit converters.

See FLIcamera.com for alternate configurations

FINGER LAKES INSTRUMENTATION · MADE IN USA

Request a quote for KL400 FI

REQUEST A QUOTE

flicamera.com/models/kl400-fi · USA 585-624-3760