FINGER LAKES INSTRUMENTATION

KEPLER CMOS CAMERA

KL4040 BI.

DATASHEET flicamera.com/models/kl4040-bi

PRODUCT PAGE

MADE IN USA

4K x 4K at 23 fps

The KL4040 BI scientific CMOS camera has the same pixel size and imaging area as the popular KAF-16803 CCD, but with 1/4 the noise, 90% peak quantum efficiency, and excellent sensitivity in the UV. Kepler cooled sCMOS cameras provide ultra-high sensitivity, ultra-low noise, and high frame rates, all at game-changing price to performance ratio.



KL4040 without shutter

KEY SPECIFICATIONS

SENSOR	SIZE (MM)	RESOLUTION	PIXEL SIZE
GPixel GSense4040BSI	36.9 X 36.9 mm (52.1 mm)	4096 x 4096	9 x 9 µm

FULL WELL	READ NOISE	DARK CURRENT	PEAK Q.E.
39000 electrons	2.3 e-	0.4 eps at -10C	90%

TECHNICAL DATA

Sensor Type	Back Illuminated CMOS
Shutter Type	Rolling
Pixel Size (microns)	9 x 9 µm
Full Well Capacity (e-)	39000 electrons
Dynamic Range	84.2 dB
Cooling Method	Air and Liquid [1]
Temperature Stability	0.1°C
Interface	USB 3.0 (Optional QSFP [2])
Optional Shutter	65mm
Subarray Readout	Standard

Sensor	GPixel GSense4040BSI
Active Pixels	4096 x 4096
Imaging Area (Diagonal)	36.9 X 36.9 mm (52.1 mm)
Typical Readout Noise	2.3 e-
Frame Rate (fps)	23 fps (QSFP V2)
Max. Cooling (Air)	35°C below ambient
Dark Current (typical)	0.4 eps at -10C
Data Bit Depth	16 bit
Optional Mounts	Medium Format Recommended (6x7)
External Trigger In/Out	Standard

SDK / Software	Kepler SDK / FLI Pilot	**Weight**	4 lbs (1.8 kg)
Peak QE	90%		

TECHNICAL FIGURES

Absolute quantum efficiency

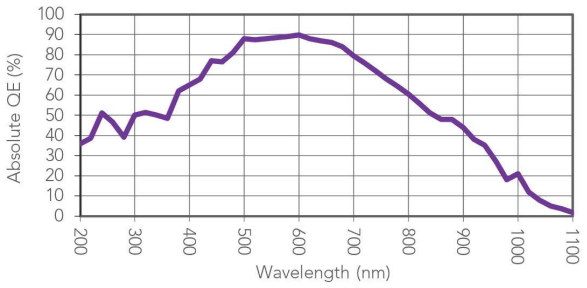

Mechanical outline

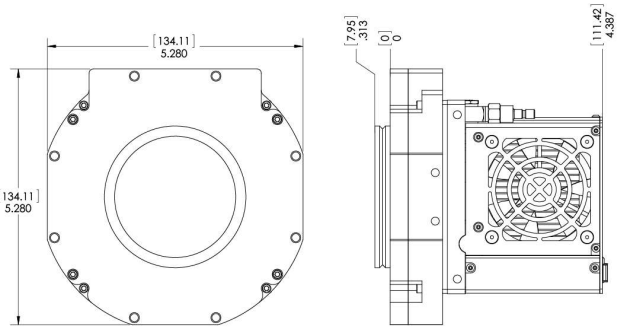

NOTES AND OPERATING CONDITIONS

1 Liquid circulation connectors sold separately.

2 QSFP = Quad Small Form factor Pluggable: high speed fiber optic interface.

3 16-bit data merged from two 12 bit converters.

See FLIcamera.com for alternate configurations

FINGER LAKES INSTRUMENTATION · MADE IN USA

Request a quote for KL4040 BI

REQUEST A QUOTE

flicamera.com/models/kl4040-bi · USA 585-624-3760