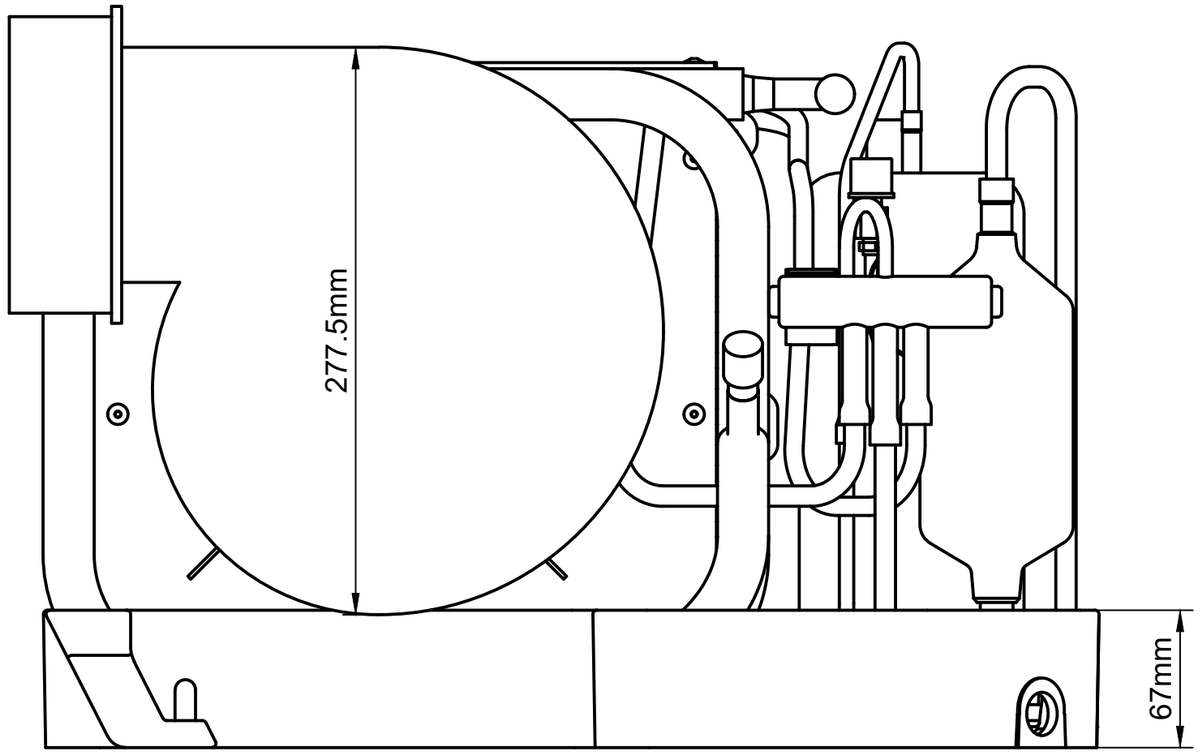

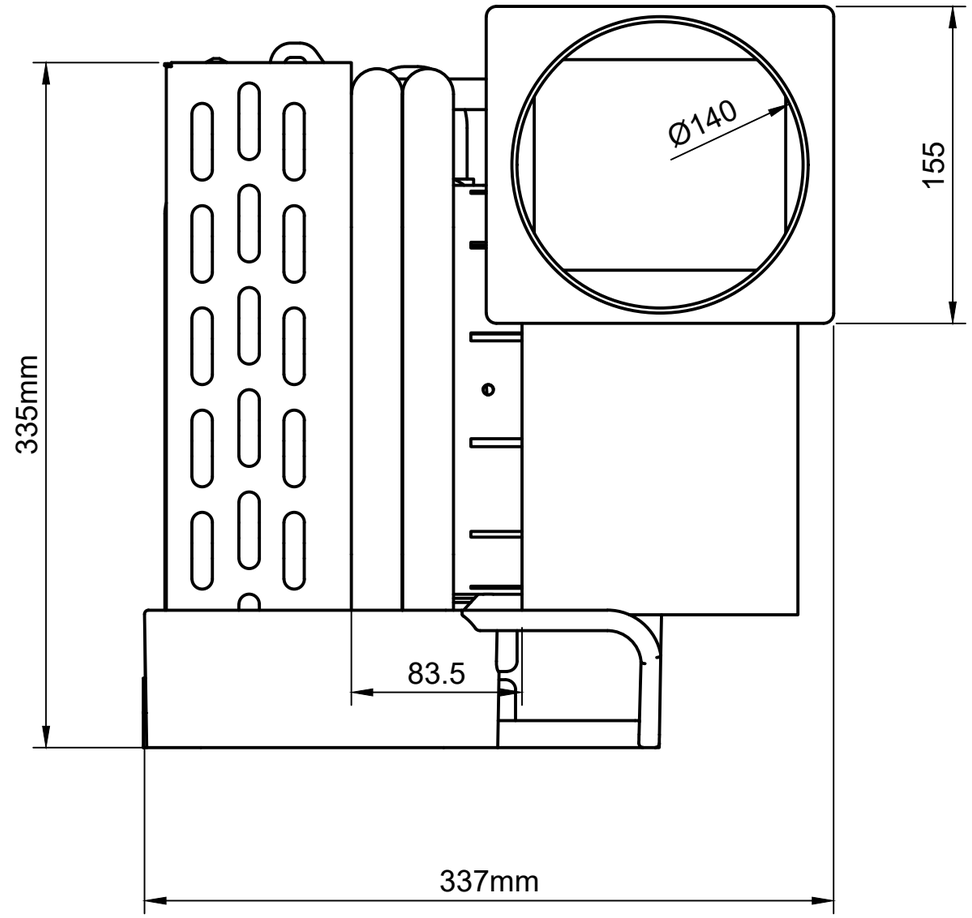

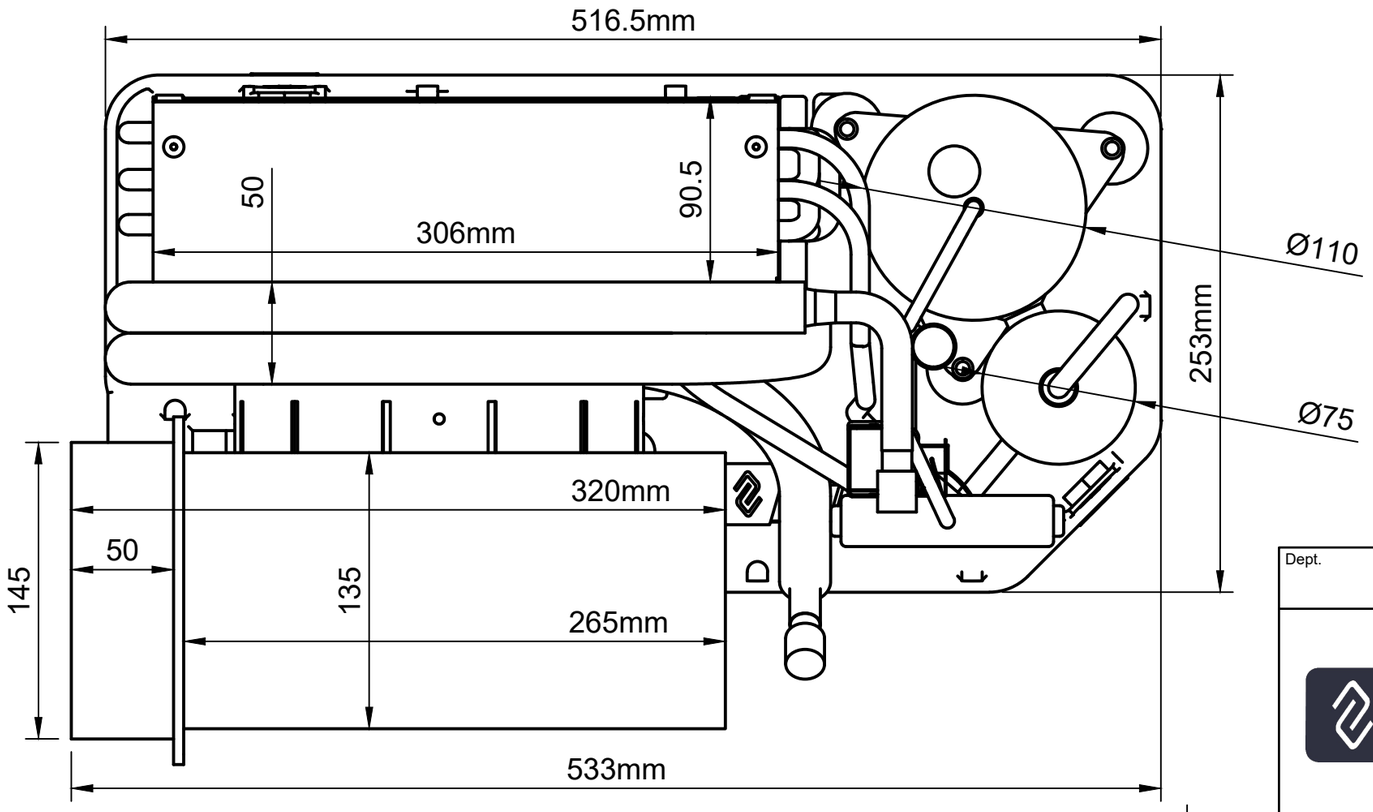

Dept.	Technical reference	Created by	Approved by
	1:3 Scale	Leonardo Bezara	Javier Ripoll Jr
		Document type: 2025 Edition	Document status
		Title: CTM - CT-16 16,000 BTU	DWG No.
			Rev. / Date of issue: 2/2025 / Sheet