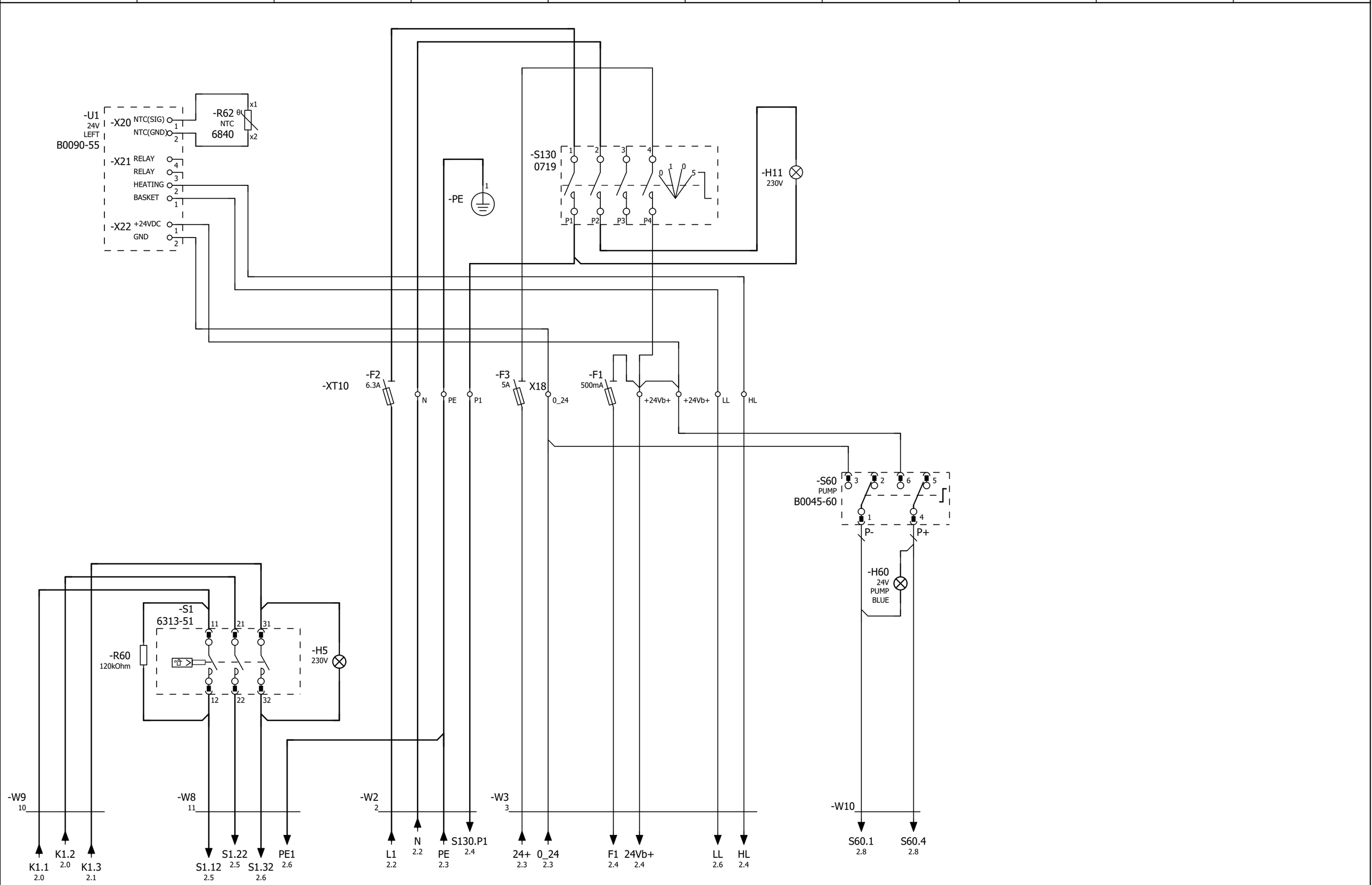


2

| | | | | | | | | | |
|---|---|---|---|---|---|---|---|---|---|
| J | | | | Date | 26.11.2019 | Valentine SWISS MADE | CH- 1022 Romanel-sur-Morges<br>T +41 21 637 37 40<br>F +41 21 637 37 41 | EVO-VC-250TLP 3N400/415VAC 11/11.8kW 16/16.5A | DIAGRAM FRONT |
| | | | | Dessinateur | chevailler | | | | + |
| | | | | Remplace | | | | | **8425-VCLP, 8426-VCLP** |
| Indice | Modification | Date | Nom | Fichier | | | | | Feuille 1 / Feuilles 2 |

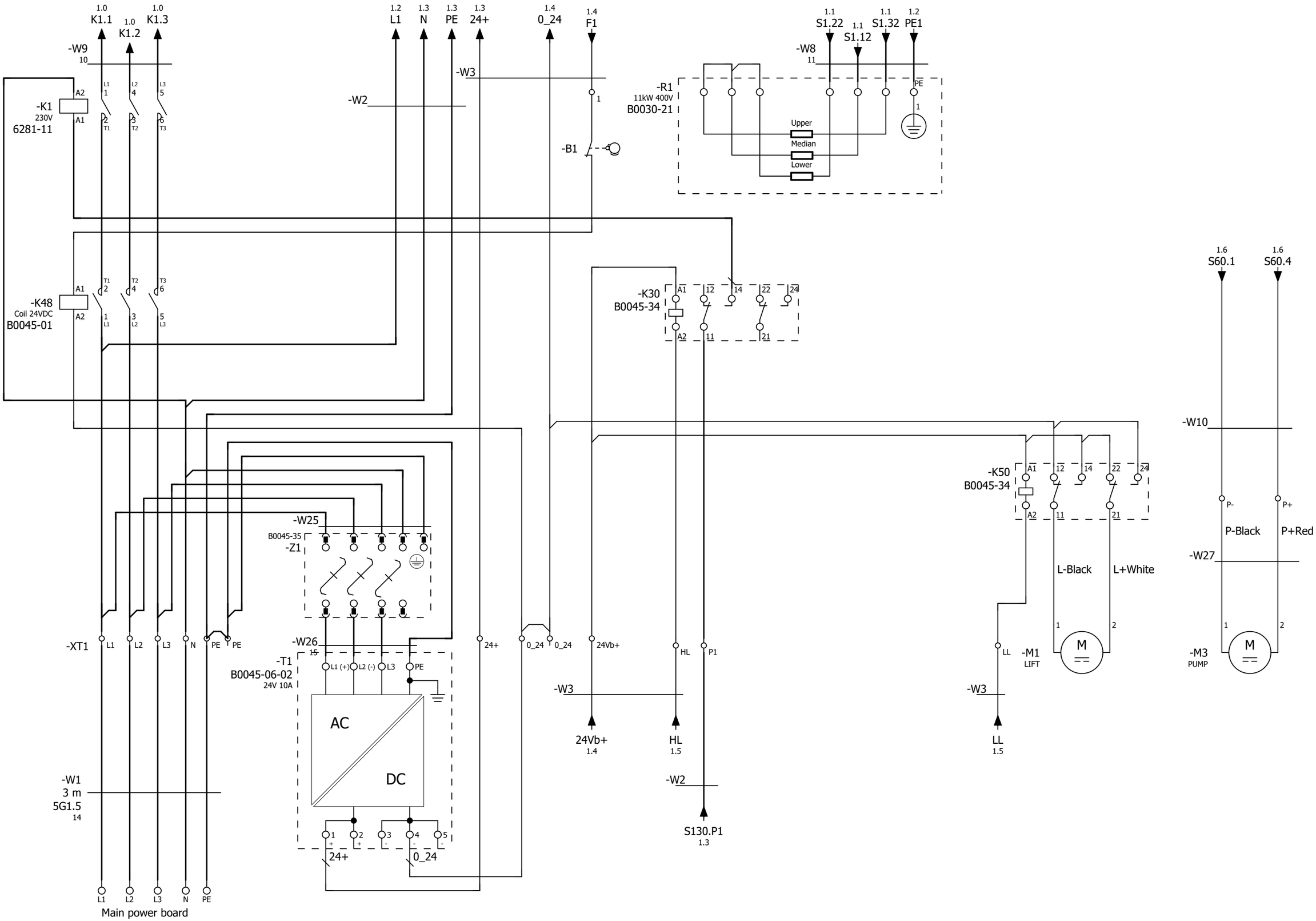


| | | | | | | | | | |
|---|---|---|---|---|---|---|---|---|---|
| J | | | | Date | 03.02.2020 | Valentine SWISS MADE | CH- 1022 Romanel-sur-Morges<br>T +41 21 637 37 40<br>F +41 21 637 37 41 | EVO-VC-250TLP 3N400/415VAC 11/11.8kW 16/16.5A | DIAGRAM BACK |
| | | | | Dessinateur | moret | | | | + |
| | | | | Remplace | | | | | **8425-VCLP, 8426-VCLP** |
| Indice | Modification | Date | Nom | Fichier | | | | | Feuille 2 / Feuilles 2 |