Neuver Maritime

Maintenance Manual Neuver Maritime

Frydenbö RV-4 Steering Gear

Doc. no. DMN000283845				
Rev.	**Date**	**Reason for issue**	**Author, dept. and name**	**Authorizing dept. name, sign**
L	22 JUNE 2026	Changed table text in chap. 5 and chap. 6 Updated chap. 11.1 Updated chap. 13.1 and added new chap. 13.2.	Ø.B, E.K, E.B, A.N, B.O	
K	24 OCTOBER 2025	Major changes in chap. 6. Major changes in chap. 13.1 and 13.2.	Ø.B, E.K	

NOTE!

You will always find the latest revision of this document at www.neuver.com

NEUVER MARITIME PROPRIETARY. This document and its accompanying elements contain NEUVER MARITIME information which is proprietary and confidential. Any disclosure, copying, distribution or use is prohibited if not otherwise explicitly agreed with NEUVER MARITIME in writing. Any authorized reproduction, in whole or in part, must include this legend. ©2026 NEUVER MARITIME - All rights reserved.

Table of Contents

1. Introduction 5
2. Maintenance Overview 5
3. Safety 7
3.1. General statement 7
3.2. Safety Annotations 8
4. Steering Gear Actuator and Power Pack 9
5. Docking Related Service and Maintenance tasks 10
5.1. Service and maintenance intervals 11
5.2. Tools Needed 12
5.3. Weight of Cover and Rotor 13
6. Routine Maintenance tasks 14
7. Oil Recommendations 17
8. System Oil Volume 19
9. Grease Recommendation for Stuffing Box 20
10. Tightening Torque for Bolts 21
11. Maintenance Instructions 23
11.1. Oil Sampling 24
11.2. Venting 25
11.3. Filling and Refilling of Oil 26
11.4. Maneuvering Time Test 27
11.5. Replacement of Gland Seals 28
11.6. Replacement of Filter Element 30
11.7. Replacement of Flexible Coupling in Pump Unit 31
11.8. Adjustment of Haenni Contents Gauge 32
11.9. Cleaning of Water/Oil Cooler 35
11.10. Cleaning of Air/Oil Cooler 36
11.11. FB40 Feedback Inspection 38
11.12. Stuffing Box (if NEUVER delivery) 40
11.13. Function Test of Alarm System 41
11.14. Adjustment of Rudder Angle Indicator System 43
11.15. Adjustment of Rudder Angle Indicator Amplifier (if NEUVER delivery) 44
11.16. Adjustment of Limit Switches in Feedback Unit 45
11.17. Adjustment of Amplifier Card (if NEUVER delivery) 46
11.18. Adjustment of FU-Controller (if NEUVER delivery) 47
11.19. Replacement of Alarm System Card 48
11.20. Replacement of Pump Control Card 49
11.21. Replacement of Amplifier Card 50
11.22. Replacement of Selector Card 51
11.23. Replacement of Start Relay 52
11.24. Replacement of Solenoid Driver 53
11.25. Replacement of Limit Switches in Feedback Units 54

NEUVER MARITIME PROPRIETARY. This document and its accompanying elements contain NEUVER MARITIME information which is proprietary and confidential. Any disclosure, copying, distribution or use is prohibited if not otherwise explicitly agreed with NEUVER MARITIME in writing. Any authorized reproduction, in whole or in part, must include this legend. ©2026 NEUVER MARITIME - All rights reserved.

11.26. Replacement of Proximity Switch 55

12. Troubleshoot Hydraulic Lock Alarm (Only AS02) 57

13. Spare parts 58
13.1. Critical spare parts 59
13.2. Recommended spare parts 60
13.3. Spare Part Kits and Items 61
13.4. Pump Spare Parts 63

14. Contact 64

NEUVER MARITIME PROPRIETARY. This document and its accompanying elements contain NEUVER MARITIME information which is proprietary and confidential. Any disclosure, copying, distribution or use is prohibited if not otherwise explicitly agreed with NEUVER MARITIME in writing. Any authorized reproduction, in whole or in part, must include this legend. ©2026 NEUVER MARITIME - All rights reserved.

1. Introduction

This manual provides the Neuver Maritime maintenance recommendations and instructions for all Frydenbö RV-4 type Steering Gears. Pictures and illustrations used in this manual may deviate from the equipment on board your vessel. All recommendations are provided in relation to general Class requirements and guidelines.

2. Maintenance Overview

Neuver Maritime (NM) Steering Gears are designed for safe operation with a minimum maintenance need. However, to prevent unexpected problems or downtime, it is recommended that the users maintain the Steering Gear system at regular intervals.

For scheduled class survey and general service or repair, it is recommended to use Neuver Maritime service engineers. This will decrease the time of repair to a minimum and ensure continuous safe operation.

This document describes all relevant maintenance procedures and activities to be carried out by the crew, in addition to the maintenance recommended to be performed by Neuver Maritime service engineers. Any other information may be found in the Steering Gear USER MANUAL or by contacting support@neuver.com.

The RV Steering Gears are of robust design and by following the recommended maintenance schedule, long and reliable operation is secured. However, after a certain number of years in operation, it is necessary to overhaul the equipment and change internal wear parts. The internal wear parts mainly consist of internal seals, radial bearings (linings) and axial bearings (thrust bearing). The overhaul interval is dependent on factors such as:

- Weight of rudder and rudderstock.
- Alignment of rudderstock and Steering Gear.
- Radial forces from rudder and the operation profiles of the Steering Gear.
- Oil temperature and oil condition.
- Number of operating hours.
- Other conditions such as DP operations will generate more wear than steaming.

The condition of most wear parts is possible to detect by visual inspection or testing. However, the thrust bearing, for example, can normally only be inspected by draining oil from the actuator and opening the top cover to physically measure the clearance under the rotor. For some of the new generation actuators there is a measuring device available, as an option, for control of the thrust bearing without draining oil and removal of the top cover.

Although the internal wear parts are designed to last well in excess of 5 years, it is wise to use the opportunity during the regular class survey dockings to confirm the Steering Gear internal condition. If more than half worn, it should be considered if the parts can last until next planned docking.

NEUVER MARITIME PROPRIETARY. This document and its accompanying elements contain NEUVER MARITIME information which is proprietary and confidential. Any disclosure, copying, distribution or use is prohibited if not otherwise explicitly agreed with NEUVER MARITIME in writing. Any authorized reproduction, in whole or in part, must include this legend. ©2026 NEUVER MARITIME - All rights reserved.

Monitoring the condition and performance of the equipment and taking notice of any changes is important in order to reveal any problems developing before a breakdown occurs.

NOTE!

It is requested that any failures or maintenance work on the equipment, no matter how small, should be reported to Neuver Maritime at; support@neuver.com

By reporting any failures or maintenance work, an accurate equipment history is maintained. This history can continuously be monitored and compared to other vessels with similar equipment. With this information, NEUVER MARITIME can provide better service, faster delivery of spare parts and guidance for preventive maintenance of the products.

NEUVER MARITIME PROPRIETARY. This document and its accompanying elements contain NEUVER MARITIME information which is proprietary and confidential. Any disclosure, copying, distribution or use is prohibited if not otherwise explicitly agreed with NEUVER MARITIME in writing. Any authorized reproduction, in whole or in part, must include this legend. ©2026 NEUVER MARITIME - All rights reserved.

3. Safety

Please take the time to read this chapter carefully, as it concerns your safety.

3.1. General statement

“UNDERTAKING ANY WORK ENVISAGED BY THIS DOCUMENT MAY EITHER DIRECTLY OR INDIRECTLY CREATE RISKS TO:

[1] THE SAFETY AND HEALTH OF THE PERSON UNDERTAKING THE WORK OR,

[2] THE PRODUCT AND/OR ITS COMPONENTS WHILST THE WORK IS BEING UNDERTAKEN.

IT IS THE RESPONSIBILITY OF THE USER TO ENSURE THAT APPROPRIATE CONTROLS AND PRECAUTIONS ARE IDENTIFIED AND APPLIED IN RELATION TO THE WORK ENVISAGED BY THIS DOCUMENT IN ACCORDANCE WITH RELEVANT STATUTORY, LEGAL AND INDUSTRY REQUIREMENTS TO PROTECT THE HEALTH AND SAFETY OF THE PERSONS UNDERTAKING THE WORK.

IT IS ALSO THE USER’S RESPONSIBILITY TO ENSURE THAT APPROPRIATE CONTROLS AND PRECAUTIONS ARE IDENTIFIED AND APPLIED IN RELATION TO WORK ENVISAGED BY THIS DOCUMENT TO PROTECT AGAINST RISKS TO THE NEUVER MARITIME EQUIPMENT AND/OR ITS COMPONENTS WHILST THE WORK IS BEING UNDERTAKEN.

NEITHER THIS DOCUMENT, NOR ITS USE, IN ANY WAY ABSOLVES THE USER FROM THEIR RESPONSIBILITY TO ENSURE THAT THE CONTROLS AND PRECAUTION REFERRED TO ABOVE ARE IMPLEMENTED.

IF, WHILST UNDERTAKING ANY WORK ENVISAGED BY THIS DOCUMENT, YOU BECOME AWARE OF ANY NEUVER MARITIME PRODUCT DESIGN RELATED FEATURE WHICH COULD CREATE RISK TO A PERSON UNDERTAKING WORK OR TO THE PRODUCT AND/OR ITS COMPONENTS PLEASE CONTACT THE RESPECTIVE TECHNICAL PRODUCT MANAGER AT NEUVER MARITIME IMMEDIATELY.”

NEUVER MARITIME PROPRIETARY. This document and its accompanying elements contain NEUVER MARITIME information which is proprietary and confidential. Any disclosure, copying, distribution or use is prohibited if not otherwise explicitly agreed with NEUVER MARITIME in writing. Any authorized reproduction, in whole or in part, must include this legend. ©2026 NEUVER MARITIME - All rights reserved.

3.2. Safety Annotations

All safety directions must be respected in order to avoid damage to personnel, environment and equipment. In this document the following annotations are used with belonging significance:

WARNING!

Indicates possibilities for hazards or unsafe practices, which COULD result in fatal or severe personnel injuries or substantial product or property damage, if the required precautions are not taken.

NOTE!

Draws attention to specific information of technical significance, which might not be obvious to specialist personnel, or points at important remarks in the procedures to follow.

NEUVER MARITIME PROPRIETARY. This document and its accompanying elements contain NEUVER MARITIME information which is proprietary and confidential. Any disclosure, copying, distribution or use is prohibited if not otherwise explicitly agreed with NEUVER MARITIME in writing. Any authorized reproduction, in whole or in part, must include this legend. ©2026 NEUVER MARITIME - All rights reserved.

4. Steering Gear Actuator and Power Pack

The main components of the RV Steering Gear are illustrated below. The rotor, turning in bearings at top and bottom, is equipped with vanes upon which the oil pressure is acting and thereby developing turning torque. The turning movement is limited by stoppers fixed to the housing. The stoppers also act as mechanical rudder stoppers in hard-over position. In addition to the stoppers, the actuator is equipped with electrical limit switches stopping the turning movement at a predetermined angle.

The rudder carrier bearing of the actuator has sufficient capacity to carry the full weight of rudder, rudderstock and rotor, eliminating the need for a separate rudder carrier bearing. The bearing is lubricated by the system oil. The sealing system consists of synthetic oil resistant material resting in seal grooves. The sealing system prevents both internal and external leakage.

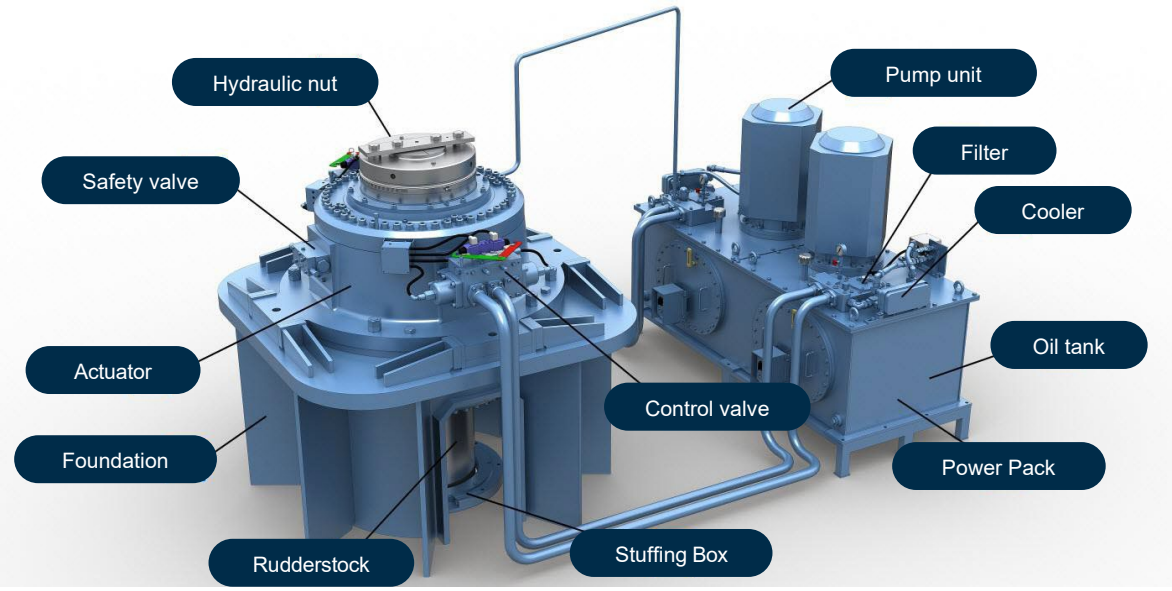

The Power Pack consists of two pump units operated separately or combined. Each pump unit provides oil with sufficient flow to develop the specified rudder angle. One pump unit is normally in operation, while the other is acting as a stand-by unit. However, it is possible to run both pump units simultaneously and thereby doubling the turning rate when shortest possible steering time is required.

The pump units are remotely controlled at normal operation. For emergencies, they may be manually operated from the Steering Gear room. However, installations can vary with individual variances.

NEUVER MARITIME PROPRIETARY. This document and its accompanying elements contain NEUVER MARITIME information which is proprietary and confidential. Any disclosure, copying, distribution or use is prohibited if not otherwise explicitly agreed with NEUVER MARITIME in writing. Any authorized reproduction, in whole or in part, must include this legend. ©2026 NEUVER MARITIME - All rights reserved.

5. Docking Related Service and Maintenance tasks

Please see below intervals for service and maintenance recommended in relation to scheduled class surveys or docking.

Service and maintenance	5 YEAR	10 YEAR	15 YEAR	20 YEAR	25 YEAR
Actuator*					
Internal seal kit	x	x	x	x	x
Cover gasket	x	x	x	x	x
Gland set	x	x	x	x	x
Bleed plugs & bonded seals	x	x	x	x	x
Liners		x		x	
Thrust bearing		x		x	
Pressure valve		x		x	
Replace Actuator Safety Valve	#	x	#	x	#
Power Pack*					
Flexible coupling	x	x	x	x	x
Filter and filter seal	x	x	x	x	x
Pump overhaul	x	x	x	x	x
O-ring return pipe and bend	x	x	x	x	x
Replace Frequency Converter**		x		x	
Tank cover gasket	x	x	x	x	x
Hydraulic hose cooler **		x		x	
Seal kit valves	x		x		x
O-ring and plugs for hydraulic nut		x		x	
Stuffing box seals **		x		x	
Water/Oil cooler **		x		x	

* - Recommended to be carried out in dry dock/port, by Neuver Maritime service engineers.

** - If installed by Neuver Maritime.

- Function Test of Actuator Safety Valve every 5 years, by Neuver Maritime service engineers.

x - Service or maintenance interval is depending on factors such as weight of rudder/rudderstock, alignment of rudderstock/Steering Gear, radial forces from rudder and the operation profile of the Steering Gear.

NEUVER MARITIME PROPRIETARY. This document and its accompanying elements contain NEUVER MARITIME information which is proprietary and confidential. Any disclosure, copying, distribution or use is prohibited if not otherwise explicitly agreed with NEUVER MARITIME in writing. Any authorized reproduction, in whole or in part, must include this legend. ©2026 NEUVER MARITIME - All rights reserved.

Steering Gear Performance Monitoring System (SG PMS):

The purpose of the performance monitoring system is to continuously monitor, process and record performance and operation parameters of the Steering Gear and provide an alarm when degraded or irregular performance detected. The SG PMS solution is available as an upgrade on all RV Steering Gear installations completed in 2005 or later with NM Follow-up control system.

5.1. Service and maintenance intervals

5 years	**Service and maintenance recommendations:** • Open rudder actuator for inspection and measure clearances. Replace all accessible internal seals and upper gland seals. • Power Pack: Replace filter, flexible coupling, tank cover gasket and carry out pump overhaul.
10 years	**Recommended service and maintenance according to above table, and previous service history.** • Open rudder actuator, secure rudderstock and remove rotor. Replace all internal seals, bearings, upper and lower gland seals and pressure valves. • Power Pack: Replace filter, flexible coupling, tank cover gasket and carry out pump overhaul.
15 years	**Service and maintenance recommendations** • Open rudder actuator for inspection and measure clearances. Replace all accessible internal seals and upper gland seals • Power Pack: Replace filter, flexible coupling, tank cover gasket and carry out pump overhaul.
20 years	**Recommended service and maintenance according to above table, and previous service history:** • Open rudder actuator, secure rudderstock and remove rotor. Replace all internal seals, bearings, upper and lower gland seals and pressure valves. • Power Pack: Replace filter, flexible coupling, tank cover gasket and carry out pump overhaul.
25 years	**Service and maintenance recommendations:** • Open rudder actuator, secure rudderstock and remove rotor. Replace all internal seals, bearings, upper and lower gland seals and pressure valves. • Power Pack: Replace filter, flexible coupling, tank cover gasket and carry out pump overhaul.

NEUVER MARITIME PROPRIETARY. This document and its accompanying elements contain NEUVER MARITIME information which is proprietary and confidential. Any disclosure, copying, distribution or use is prohibited if not otherwise explicitly agreed with NEUVER MARITIME in writing. Any authorized reproduction, in whole or in part, must include this legend. ©2026 NEUVER MARITIME - All rights reserved.

5.2. Tools Needed

The information below describes tools needed when servicing the Steering Gear, and the weight of actuator cover and rotor.

5 Year Service	10 Year Service
• Lifting equipment for removal of cover • Hydraulic torque wrench 500 - 3700Nm • Equipment for draining oil from the actuator	• 2 High pressure pumps with gauges. Minimum 1000 bar. • Dial gauge • Hydraulic torque wrench 500 - 3700Nm • Equipment for draining oil from the actuator • Lifting equipment for removal of cover and rotor • Hydraulic cylinder and hand pump to secure the rudder • Liquid nitrogen for replacement of liners • Tool for replacement of bottom ring seal if overhaul of actuator is carried out with rudder in • place. See illustration below.

Illustration of tool for replacement of bottom ring seal

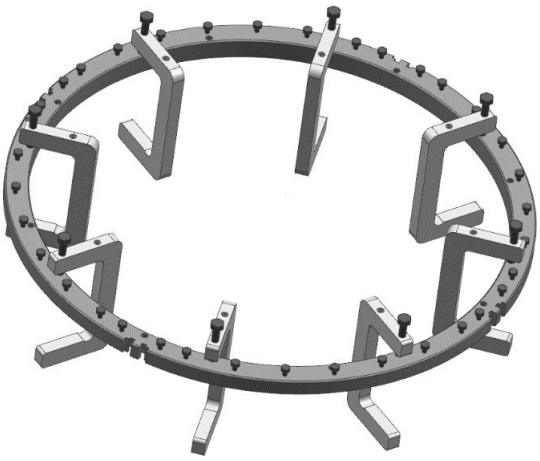

NEUVER MARITIME PROPRIETARY. This document and its accompanying elements contain NEUVER MARITIME information which is proprietary and confidential. Any disclosure, copying, distribution or use is prohibited if not otherwise explicitly agreed with NEUVER MARITIME in writing. Any authorized reproduction, in whole or in part, must include this legend. ©2026 NEUVER MARITIME - All rights reserved.

5.3. Weight of Cover and Rotor

Weight – approximate values

Actuator Type	Cover	Rotor
RV 850-4	260 kg	1700 kg
RV 1050-4	310 kg	1900 kg
RV 1450-4	382 kg	2500 kg
RV 1850-4	515 kg	3400 kg
RV 2300-4	800 kg	4500 kg
RV 2600-4	800 kg	4500 kg
RV 3500-4	1060 kg	6100 kg
RV 3900-4	1060 kg	6100 kg
RV 5500-4	1450 kg	8400 kg
RV 6550-4	1500 kg	10200 kg

See chapter 8 System Oil Volume
See chapter 10 Tightening Torque for Bolts

NEUVER MARITIME PROPRIETARY. This document and its accompanying elements contain NEUVER MARITIME information which is proprietary and confidential. Any disclosure, copying, distribution or use is prohibited if not otherwise explicitly agreed with NEUVER MARITIME in writing. Any authorized reproduction, in whole or in part, must include this legend. ©2026 NEUVER MARITIME - All rights reserved.

6. Routine Maintenance tasks

The maintenance instructions below details all preventative maintenance activities to be carried out by the Crew on a regular basis. Please add below tasks to applicable vessel maintenance system.

System	Part	Maintenance Task	Maintenance interval
	Actuator	Inspect the steering gear and its surroundings for any signs of oil leakage.	1 day
	Actuator	Check the surface temperature of the equipment (pipes from pumps).	1 day
	Actuator	Check for abnormal vibrations or noises from the equipment.	1 day
	Stuffing Box	Check that there is no leakage from Stuffing Box (if delivered by Neuver Maritime).	1 week
Hydraulic System	Oil Tank	Check oil level in the Power Pack and top up if necessary.	1 week
Hydraulic System	Standby Pump	Start/stop Standby Pump	1 week
Hydraulic System	Filter Unit	Check the filter indicator. If the filter alarm is active or the filter indicator is in the red zone, replace the filter element.	1 week
	Stuffing Box	Lubricate the seals on the Stuffing Box according to procedure (if delivered by NM). If using EAL grease, lubricate every two weeks.	2 weeks/ 1 month
	Electric Motor	Re-grease bearings for electric motor if open bearings are provided. See procedure for intervals.	2 weeks/ 3 months
		Cleaning the Steering Gear Unit and its surrounding area.	1 month
Hydraulic System	Actuator	Perform test of Steering Gear modes, including emergency steering, and normal steering from all control stations.	1 month
Hydraulic System	Actuator	Check the maneuvering time according to SOLAS (from 30° to 0° to 35°).	1 month
	Actuator	Inspect the units paintwork for any damage.	1 month
Controls System	Control Panels	Ensure that the backlight bulbs of all electrical indicators push buttons are working.	1 month
Control System	Actuator	Test and verify the function of the electrical limit switch	1 month
Hydraulic System	Coolers	Visually inspect the coolers (if installed).	6 months

NEUVER MARITIME PROPRIETARY. This document and its accompanying elements contain NEUVER MARITIME information which is proprietary and confidential. Any disclosure, copying, distribution or use is prohibited if not otherwise explicitly agreed with NEUVER MARITIME in writing. Any authorized reproduction, in whole or in part, must include this legend. ©2026 NEUVER MARITIME - All rights reserved.

System	Part	Maintenance Task	Maintenance interval
Hydraulic System	Actuator	Collect a sample of hydraulic oil from the actuator.	6 months
Hydraulic System	Power Pack	Replace filters*.	1 year
Intercom system	Steering Gear room	Check communication system between Steering Gear room and the bridge.	1 year
Controls System	Electric Motor	Perform a Megger Test on the electric motors.	1 year
Controls System	El system	Perform a visual check of all electrical components, earthing, and cable connections.	1 year
El system	El system	Replace vibration dampers (if installed).	5 years

Note: *If a filter alarm or the filter indicator is in the red zone replace the filter element at the first possible occasion.

NEUVER MARITIME PROPRIETARY. This document and its accompanying elements contain NEUVER MARITIME information which is proprietary and confidential. Any disclosure, copying, distribution or use is prohibited if not otherwise explicitly agreed with NEUVER MARITIME in writing. Any authorized reproduction, in whole or in part, must include this legend. ©2026 NEUVER MARITIME - All rights reserved.

Steering Gear and Power Pack illustrations:

Below illustrations show where the different critical parts are found on the Steering Gear and Power Pack unit. Please note that the illustrations can deviate from the equipment on board your vessel.

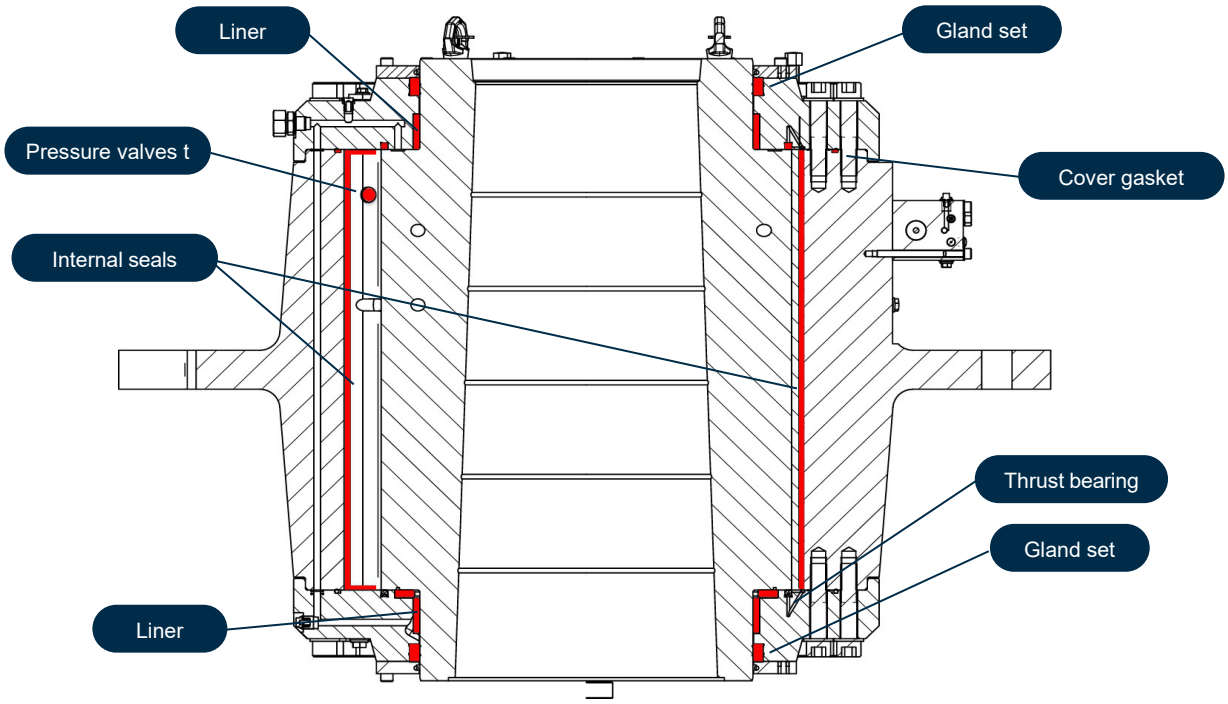

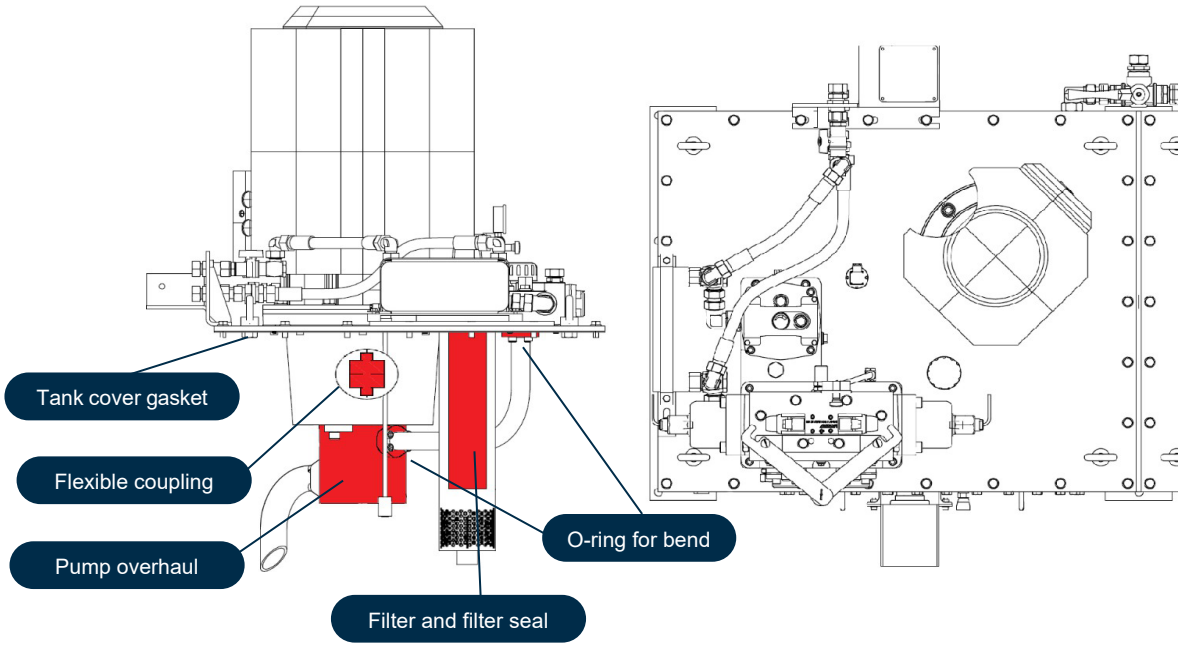

NEUVER MARITIME PROPRIETARY. This document and its accompanying elements contain NEUVER MARITIME information which is proprietary and confidential. Any disclosure, copying, distribution or use is prohibited if not otherwise explicitly agreed with NEUVER MARITIME in writing. Any authorized reproduction, in whole or in part, must include this legend. ©2026 NEUVER MARITIME - All rights reserved.

7. Oil Recommendations

WARNING!

- Using oil other than specified by NEUVER MARITIME may cause malfunctions when maneuvering the vessel. This can cause personal injury and equipment damage. Before using other brands, please contact Neuver Maritime.
- Do not mix hydraulic oils.

NOTE!

Oil temperature must be limited to 70°C.

For vessels operating worldwide, NEUVER recommend oil according to ISO-VG 68. Viscosity Index of minimum 110. Only use oil approved and recommended by NEUVER.

The performance of the unit is highly depended on the viscosity of the oil. The surrounding temperatures of the hydraulic components when operating at extreme temperature conditions, tropic or arctic waters, must be considered when selecting type of oil.

The oil must be checked regularly for contamination and the relevant oil company and NEUVER recommendation for oil change must be followed. Change the oil if components in the hydraulic system are broken down or if significant color or smell change occurs. If laboratory tests show a change in the number of additives or a high number of insoluble particles in the oil, oil change is required. If the water content exceeds 300ppm, a separator or similar for water removal should be applied.

NEUVER MARITIME PROPRIETARY. This document and its accompanying elements contain NEUVER MARITIME information which is proprietary and confidential. Any disclosure, copying, distribution or use is prohibited if not otherwise explicitly agreed with NEUVER MARITIME in writing. Any authorized reproduction, in whole or in part, must include this legend. ©2026 NEUVER MARITIME - All rights reserved.

Approved hydraulic oil by Neuver Maritime:

Manufacturer	Oil type	Viscosity	Kinematic Viscosity [cSt]			Pour point [ºC]
			0ºC	40ºC	100ºC	
CASTROL	HYSPIN AWH-m 68	150	580	68	10,9	- 39
TOTAL	VISGA 68	155	700	73	11,7	- 36
ESSO	UNVIS N 68	155	560	66	10,7	- 36
GULF	GULFSEA HYDRAULIC HVI PLUS 68	148	-	68,9	-	- 30
MOBIL	MOBIL DTE 10 EXCEL 68	156	-	68,4	11,17	- 39
NYNÄS	HYDOL 68	150	500	58	9,6	- 39
SHELL	TELLUS S2 VX 68	143	-	68	10,5	- 30
TEXACO	RANDO HDZ 68	181	500	69	12,3	- 36
FUCHS	HYDRAWAY HVXA 68	172	-	62	11,0	- 39
FUCHS	RENOLIN B 68 HVI	153	-	68	11,0	-36

For storage of hydraulic oil, follow practice recommended from the relevant oil company. All oil drums must be stored in horizontal position with oil cap below the maximum level indicator.

For the hydraulic oil circulating in the Steering Gear, it is highly recommended to keep the cleanliness within 20/18/15 according to ISO 4406-1999 (comparable to NAS 1638 or SAE AS 4059 class 9). If oil cleanliness is no longer within the above limits, renew the filter elements.

NEUVER MARITIME PROPRIETARY. This document and its accompanying elements contain NEUVER MARITIME information which is proprietary and confidential. Any disclosure, copying, distribution or use is prohibited if not otherwise explicitly agreed with NEUVER MARITIME in writing. Any authorized reproduction, in whole or in part, must include this legend. ©2026 NEUVER MARITIME - All rights reserved.

8. System Oil Volume

Oil volume for Steering Gears – approximate values:

Model type	Oil volume
RV 850-4	Approx. 64 litre
RV 1050-4	Approx. 80 litre
RV 1450-4	Approx. 108 litre
RV 1850-4	Approx. 140 litre
RV 2300-4	Approx. 200 litre
RV 2600-4	Approx. 200 litre
RV 3500-4	Approx. 300 litre
RV 3900-4	Approx. 300 litre
RV 5500-4	Approx. 370 litre
RV 6550-4	Approx. 440 litre

Oil volume for Power Pack – approximate values:

Power Pack	Oil volume
PPS 2" Small	Approx. 2x 300 litre
PPSI 2" Small	Approx. 2x 300 litre + 450 litre
PPS 2" low	Approx. 2x 350 litre
PPSI 2" low	Approx. 2x 350 litre + 600 litre
PPS 2" - 4 vane	Approx. 2x 700 litre
PPSI 2"- 4 vane	Approx. 2x 700 litre + 1100 litre
PPSI 3"- 4 vane	Approx. 2x 1000 litre + 1650 litre

NEUVER MARITIME PROPRIETARY. This document and its accompanying elements contain NEUVER MARITIME information which is proprietary and confidential. Any disclosure, copying, distribution or use is prohibited if not otherwise explicitly agreed with NEUVER MARITIME in writing. Any authorized reproduction, in whole or in part, must include this legend. ©2026 NEUVER MARITIME - All rights reserved.

9. Grease Recommendation for Stuffing Box

Standard Grease:

The following standard greases are approved and recommended for use in the Stuffing Box delivered by Neuver Maritime:

Manufacturer	Oil type
SHELL	GADUS S3 AI300 C2
MOBILITH	SHC 460
FUCHS	RENOLIT GREASEWAY CAH 92

EAL Grease:

The following EAL (Environmentally Acceptable Lubricants) greases are approved and recommended for use in the Stuffing Box delivered by Neuver Maritime:

Manufacturer	Oil type
KLUBER	AG39-602 N
KLUBER	BM 32-142
CASTROL	BIOTAC MP

NEUVER MARITIME PROPRIETARY. This document and its accompanying elements contain NEUVER MARITIME information which is proprietary and confidential. Any disclosure, copying, distribution or use is prohibited if not otherwise explicitly agreed with NEUVER MARITIME in writing. Any authorized reproduction, in whole or in part, must include this legend. ©2026 NEUVER MARITIME - All rights reserved.

10. Tightening Torque for Bolts

NOTE!

Make sure to follow recommended tightening torque and friction coefficient as described below.

A friction coefficient μ = 0,15 - normally oiled threads, is assumed in the calculations of the preceding tightening torques. For other values of the friction coefficient, the tightening torques should be adjusted accordingly.

Torque for bolts with normally oiled threads:

Dim	Qual	Nm
M 10	8.8	50
M 12	8.8	86
M 16	8.8	215
M 20	8.8	410
M 24	8.8	710
M 30	8.8	1400

Dim	Qual	Nm
M 10	12.9	84
M 12	12.9	145
M 16	12.9	360
M 20	12.9	700
M 24	12.9	1243
M 30	12.9	2400

Torque for actuator cover bolts using Molykote G Rapid+:

Dim	Qual	Nm
M 24	8.8	500
M 30	8.8	1000
M 36	8.8	1600

NEUVER MARITIME PROPRIETARY. This document and its accompanying elements contain NEUVER MARITIME information which is proprietary and confidential. Any disclosure, copying, distribution or use is prohibited if not otherwise explicitly agreed with NEUVER MARITIME in writing. Any authorized reproduction, in whole or in part, must include this legend. ©2026 NEUVER MARITIME - All rights reserved.

Dim	Qual	Nm
Dim	Qual	Nm
M 24	12.9	650
M 30	12.9	1250
M 36	12.9	1625

NEUVER MARITIME PROPRIETARY. This document and its accompanying elements contain NEUVER MARITIME information which is proprietary and confidential. Any disclosure, copying, distribution or use is prohibited if not otherwise explicitly agreed with NEUVER MARITIME in writing. Any authorized reproduction, in whole or in part, must include this legend. ©2026 NEUVER MARITIME - All rights reserved.

11. Maintenance Instructions

Please see the maintenance support procedure and guidelines described below required for maintaining the Steering Gear system in a safe and correct manner.

WARNING!

- Never work alone when installing heavy components, even when using secure lifting equipment such as lockable block and tackle. Most lifting devices require two people, one to oversee to the lifting device and the other to ensure that the components do not get caught and damaged.
- Always wear protective goggles if there is a risk of splinters, grinding sparks and splashes from acid or other chemicals. Eyes are extremely sensitive and an injury to them can result in loss of sight.
- Using hydraulic oil other than the one specified in this manual may cause malfunctions when operating the equipment. This may cause personal injury and equipment damage

NOTE!

- Most chemicals intended for the product (engine and gearbox oils, glycol, gasoline and diesel), or the workshop (degreasing agent, paints and solvents) can be harmful to your health. Read the instructions on packaging carefully! Always follow protective measures such as using a protective mask, goggles, gloves etc. Ensure that other personnel are not unknowingly exposed to harmful substances in the air that they breathe; ensure adequate ventilation. Dispose used and excess chemicals according to instructions.
- Ensure that the warning or information labels on the product are always visible. Replace labels that are damaged or painted over.
- Take care of the hydraulic oil when replacing parts in the hydraulic system. Any oil spillage, even a small one, will cause environmental damage. Used filter elements and worn out hydraulic oil should be disposed safely
- To avoid unexpected stops, the importance to maintain the equipment on a regular basis is emphasized.
- Use spare parts supplied by Neuver Maritime. Use of other than Neuver Maritime approved spare parts will void the warranty and may result in system failure or reduced lifetime.
- For scheduled class survey, general overhaul or repair it is advised to use Neuver Maritime service engineers. This will limit the time of repair to a minimum and ensure continuous safe operation.
- It is requested that any failures or maintenance work on the equipment shall be reported to Neuver Maritime dep. Steering Gear - Hagavik. By reporting failures and maintenance work, an accurate equipment history can be maintained by Neuver Maritime. This history will be continuously monitored and compared to other vessels with similar equipment. With this information, NEUVER can provide better service, faster delivery of spare parts, and guidance for preventive maintenance.

NEUVER MARITIME PROPRIETARY. This document and its accompanying elements contain NEUVER MARITIME information which is proprietary and confidential. Any disclosure, copying, distribution or use is prohibited if not otherwise explicitly agreed with NEUVER MARITIME in writing. Any authorized reproduction, in whole or in part, must include this legend. ©2026 NEUVER MARITIME - All rights reserved.

11.1. Oil Sampling

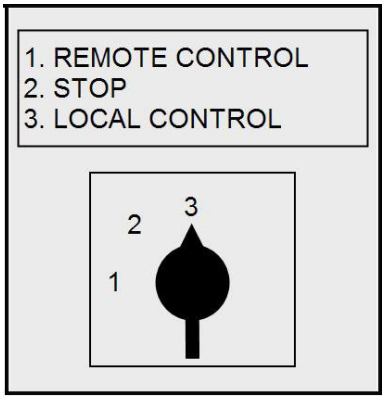

1. Start one of the pump units by turning the selector switch on the corresponding motor controller to position 3 “LOCAL CONTROL”.
2. Let the pump unit run for at least five minutes.
3. Turn the selector switch on the motor controller to position 2 “STOP”.
4. Unscrew an unused plug [1] in the return filter.
5. Connect a measuring hose (preferable with a valve mounted on it) and make sure the other end is secured in a bucket.
6. Again, start the same pump unit by turning the selector switch on the relevant motor controller to position 3 “LOCAL CONTROL”.
7. Make sure the hose valve (if mounted) is completely open, and let the pump run until you are completely sure that the hose is flushed thoroughly.
8. Fill a new and chemically pure sample bottle with oil, min 200ml.
9. Close the sample bottle
10. Turn the selector switch on the motor controller to position 2 “STOP”.
11. Disconnect the sampling equipment and mount the plug.
12. Again, start the pump unit and let it run for at least one minute. This will make sure that any trapped air will evacuate through the filter and into the tank.
13. Manually move the rudder by using the red and green Steering Gear handles as illustrated. If any noise or steering problems present, follow the venting procedure.
14. Mark the bottle with AQM type and number, date, oil type, sample taken by and how long used.
15. Compare the oil sample with new oil. If color or smell has significantly changed or there are impurities in the oil, change the oil.
16. Send the oil samples to examination immediately.

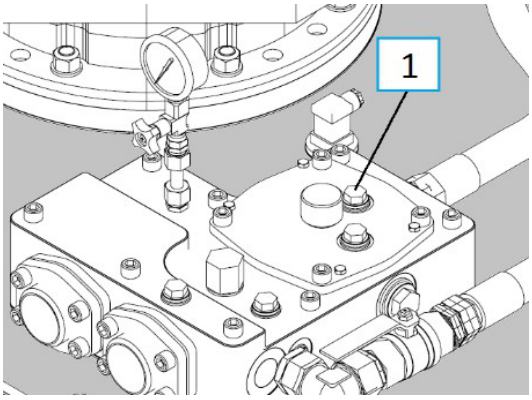

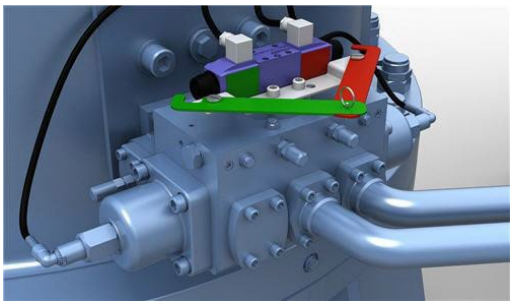

NEUVER MARITIME PROPRIETARY. This document and its accompanying elements contain NEUVER MARITIME information which is proprietary and confidential. Any disclosure, copying, distribution or use is prohibited if not otherwise explicitly agreed with NEUVER MARITIME in writing. Any authorized reproduction, in whole or in part, must include this legend. ©2026 NEUVER MARITIME - All rights reserved.

11.2. Venting

1. Start the pump unit not connected to the leakage pipe by turning the selector switch on the corresponding motor controller to position 3 “LOCAL CONTROL”.
2. While the pump is idling, open the venting plugs [1] one at a time and evacuate all air. Close the plugs when only oil is coming out.

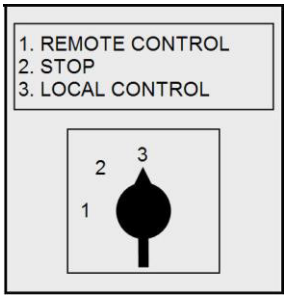

NOTE!

Do not open the venting plugs more than 2-3 rotations

3. Manually move the rudder from hard over to hard over a few times by using the handles on the control valve.
4. Loosen the leakage pipe coupling [2] and fill the pipe connector with oil while turning the rudder.
5. While the pump is idling, open the venting plugs one at a time and evacuate all air. Close the plugs when oil is coming out.

6. Stop the pump unit by turning the selector switch on the motor controller to position 2 “STOP”
7. Start the other pump unit (connected to the leakage pipe), by turning the corresponding selector switch on the motor controller to position 3 “LOCAL CONTROL”
8. Repeat step 3 and 4 above
9. Vent the leakage pipe by turning the coupling 1-2 rotations
10. Repeat Step 6 above
11. Stop the pump unit by turning the selector switch on the motor controller to position 2 “STOP”

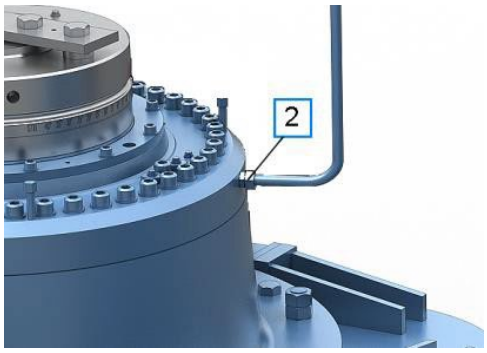

NOTE!

The system shall now operate smoothly without noise. If noise still occur, repeat the venting procedure.

NEUVER MARITIME PROPRIETARY. This document and its accompanying elements contain NEUVER MARITIME information which is proprietary and confidential. Any disclosure, copying, distribution or use is prohibited if not otherwise explicitly agreed with NEUVER MARITIME in writing. Any authorized reproduction, in whole or in part, must include this legend. ©2026 NEUVER MARITIME - All rights reserved.

11.3. Filling and Refilling of Oil

NOTE!

Ensure that the cleanliness of the new hydraulic oil is within what is recommended; 20/18/15 according to ISO 4406-1999 (comparable to NAS 1638 or SAE AS 4059 class 9). If the cleanliness level cannot be stated, or is not within what is recommended, use a 10µm mesh sized filter, to filter the oil before filling it into the Steering Gear.

1. Turn the selector switch on the motor controller to position 2 “STOP”.
2. Open the breathing filter [1] and fill oil into the oil tank.
3. Open the venting plugs [2] on top of the rudder actuator as illustrated.
4. Start the pump units by turning the selector switch on the motor controller to position 3 “LOCAL CONTROL”
5. Fill oil into the rudder actuator by operating the handles on the control valve manually for a few seconds.
6. Pay attention to oil level in oil tank and repeat the procedure until the rudder actuator is filled up with oil.
7. Turn the selector switch on the motor controller to position 2 “STOP”.
8. Repeat the same procedure on the second pump unit.
9. Oil level in oil tank to be within min and max.
10. Perform the venting procedure.

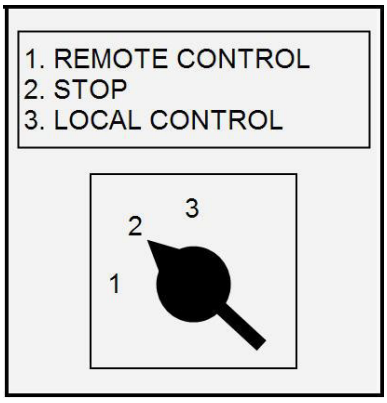

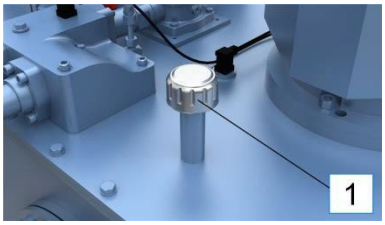

NEUVER MARITIME PROPRIETARY. This document and its accompanying elements contain NEUVER MARITIME information which is proprietary and confidential. Any disclosure, copying, distribution or use is prohibited if not otherwise explicitly agreed with NEUVER MARITIME in writing. Any authorized reproduction, in whole or in part, must include this legend. ©2026 NEUVER MARITIME - All rights reserved.

11.4. Maneuvering Time Test

For the purpose of confirming the healthy condition of the internal seal of the Steering Gear unit, the following test procedure should be followed. The procedure relies on timing the movement from 30° rudder position on one side to 35° on the opposite side. Read the pressure on the pump manometer when performing the test.

NOTE!

Performance of this test should be managed by the Chief Engineer when vessel is lying still in sheltered waters. The test should be done first with pump no 1 and then again with pump no 2.

The maneuvering time must be taken while the rudder is moving. The rudder must start at 35°. When passing 30°, the stopwatch must be started, and stopped when passing 35° on the opposite side.

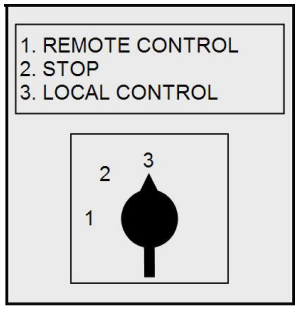

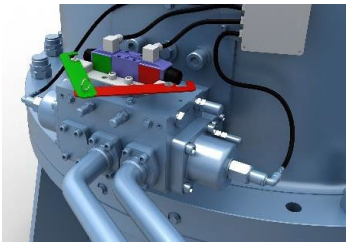

1. Set the selector switch on the motor controller 2 to position 2 “STOP”.
2. Set the selector switch on motor controller 1 to position 3 “LOCAL CONTROL”.
3. Operate the Steering Gear using the solenoid valve to 35° STBD.
4. Measure the time used from to 30°STBD - 35°PORT.
5. Measure the time used from to 30°PORT- 35°STBD.
6. Set the selector switch on motor controller 1 to position 2 “STOP”.
7. Set the selector switch on motor controller 2 to position 3 “LOCAL CONTROL”.
8. Repeat test with pump No 2.
9. Set both selector switches in position 1 “REMOTE CONTROL”.
10. Operate the Steering Gear from the bridge and follow instruction 3-5.
11. Return to 0° position and stop the pumps.

	Direction	Time	Pressure
Pump 1	STBD - PORT	Sec	Bar
Pump 1	PORT- STBD	Sec	Bar
Pump 2	STBD – PORT	Sec	Bar
Pump 2	PORT- STBD	Sec	Bar
Pump 1+2	STBD - PORT	Sec	Bar
Pump 1+2	PORT- STBD	Sec	Bar

NOTE!

For vessels with two Steering Gears, please perform one test per unit!

NEUVER MARITIME PROPRIETARY. This document and its accompanying elements contain NEUVER MARITIME information which is proprietary and confidential. Any disclosure, copying, distribution or use is prohibited if not otherwise explicitly agreed with NEUVER MARITIME in writing. Any authorized reproduction, in whole or in part, must include this legend. ©2026 NEUVER MARITIME - All rights reserved.

11.5. Replacement of Gland Seals

The gland seals may need to be replaced if leakage occurs. Please see below procedure for replacement of the gland seals. Remember to test Feedback units and any dismounted arrangement on the actuator after replacement to ensure correct reassembly.

To avoid unnecessary leakage while waiting for new gland seals, run the Steering Gear system with the pump not connected to the leak oil from the actuator. Remember to start the pump connected to the leak oil every other day to ensure lubrication of the seals.

Upper gland seals – 2 pcs [1]

Remove the upper gland ring. Remove the old gland seals. Grease the new seals with Mobilith SHC 460 before installment and fill voids with grease before assembling the gland ring.

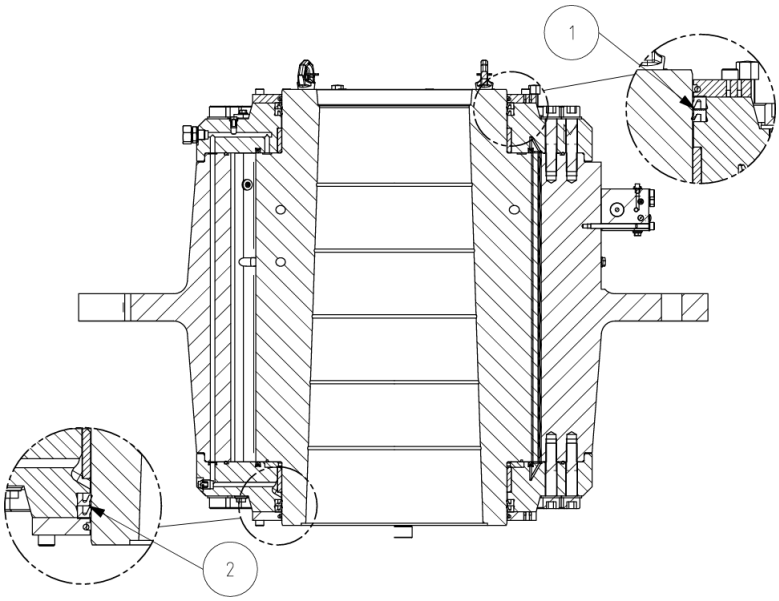

NOTE!

All seals are supplied in correct lengths and must **NEVER** be shortened. The correct way of inserting the gland seals is shown below.

NEUVER MARITIME PROPRIETARY. This document and its accompanying elements contain NEUVER MARITIME information which is proprietary and confidential. Any disclosure, copying, distribution or use is prohibited if not otherwise explicitly agreed with NEUVER MARITIME in writing. Any authorized reproduction, in whole or in part, must include this legend. ©2026 NEUVER MARITIME - All rights reserved.

Illustration. Rotor and gland seal seen from above.

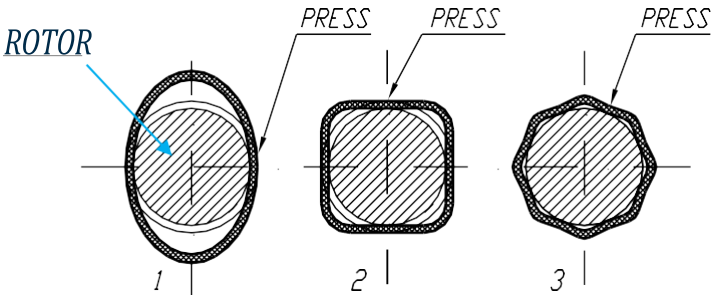

Lower gland seals – 2 pcs [2]

When replacing the lower gland seals without dismounting the actuator and removing the rotor, the new seals must be cut and welded back together around the rudderstock. Special equipment is needed for the welding procedure. Please contact Neuver Maritime if replacement of the bottom gland seals is needed at support@neuver.com.

NEUVER MARITIME PROPRIETARY. This document and its accompanying elements contain NEUVER MARITIME information which is proprietary and confidential. Any disclosure, copying, distribution or use is prohibited if not otherwise explicitly agreed with NEUVER MARITIME in writing. Any authorized reproduction, in whole or in part, must include this legend. ©2026 NEUVER MARITIME - All rights reserved.

11.6. Replacement of Filter Element

NOTE!

After the first 200 hours running, every oil filter units shall be opened for inspection and the disposable filter elements changed if necessary. If any impurities are found, the element must be replaced at short intervals until it stays clean. After this, replace the relevant filter element when the filter indicator is in the RED zone. It is recommended to change the filter elements at least once a year.

1. Turn the selector switch on the motor controller to position 2 “STOP”.
2. Open the cover on the filter housing by loosening the nuts in diagonal order.

NOTE!

Be aware of spring-loaded cover

3. Lift the disposable filter element with the filter holder out of the housing.
4. Place a bucket underneath the filter bowl.
5. By using an Allen key, unscrew the bolt [1] on top of the filter element holder.
6. Remove the supporter ring [2].
7. Remove the internal disposable filter element from its holder, and then replace with new disposable filter.

NOTE!

The filter elements are disposable and shall be replaced with new filter elements when clogged. Never rinse or air blow a clogged filter element for reuse, as it will destroy the filter.

8. Before replacing the supporter ring [2], check the condition of the O- ring. Change to new one if necessary.
9. Fasten the new disposable filter element by replacing the supporter ring
10. [2] and fastening the bolt [1] on top of the element holder.
11. Insert the new filter element with its holder to the housing
12. Replace the cover and tighten the screws in a diagonal order.
13. Follow the venting procedure.
14. Turn the selector switch on the motor controller to position 1 “REMOTE CONTROL”.

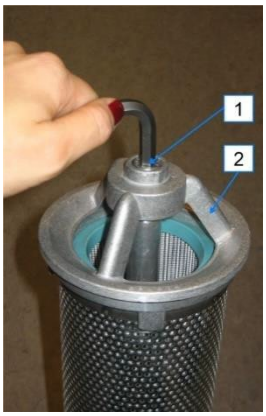

NEUVER MARITIME PROPRIETARY. This document and its accompanying elements contain NEUVER MARITIME information which is proprietary and confidential. Any disclosure, copying, distribution or use is prohibited if not otherwise explicitly agreed with NEUVER MARITIME in writing. Any authorized reproduction, in whole or in part, must include this legend. ©2026 NEUVER MARITIME - All rights reserved.

11.7. Replacement of Flexible Coupling in Pump Unit

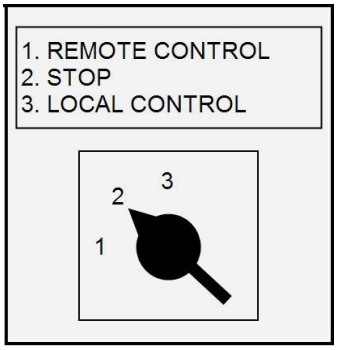

1. Turn the selector switch on the motor controller to position 2
2. “STOP”.
3. Disconnect the electrical cables in the outlet box.
4. Loosen the bolts [1] and remove the electric motor.
5. Replace the flexible coupling [2].
6. Align the couplings and lower the motor vertically on to the bell house.
7. Fasten the bolts [1].
8. Turn the selector switch on the motor controller to position 1 “REMOTE CONTROL”.

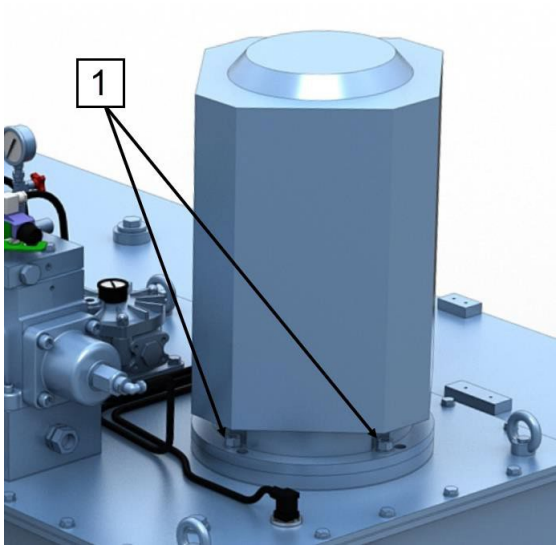

NEUVER MARITIME PROPRIETARY. This document and its accompanying elements contain NEUVER MARITIME information which is proprietary and confidential. Any disclosure, copying, distribution or use is prohibited if not otherwise explicitly agreed with NEUVER MARITIME in writing. Any authorized reproduction, in whole or in part, must include this legend. ©2026 NEUVER MARITIME - All rights reserved.

11.8. Adjustment of Haenni Contents Gauge

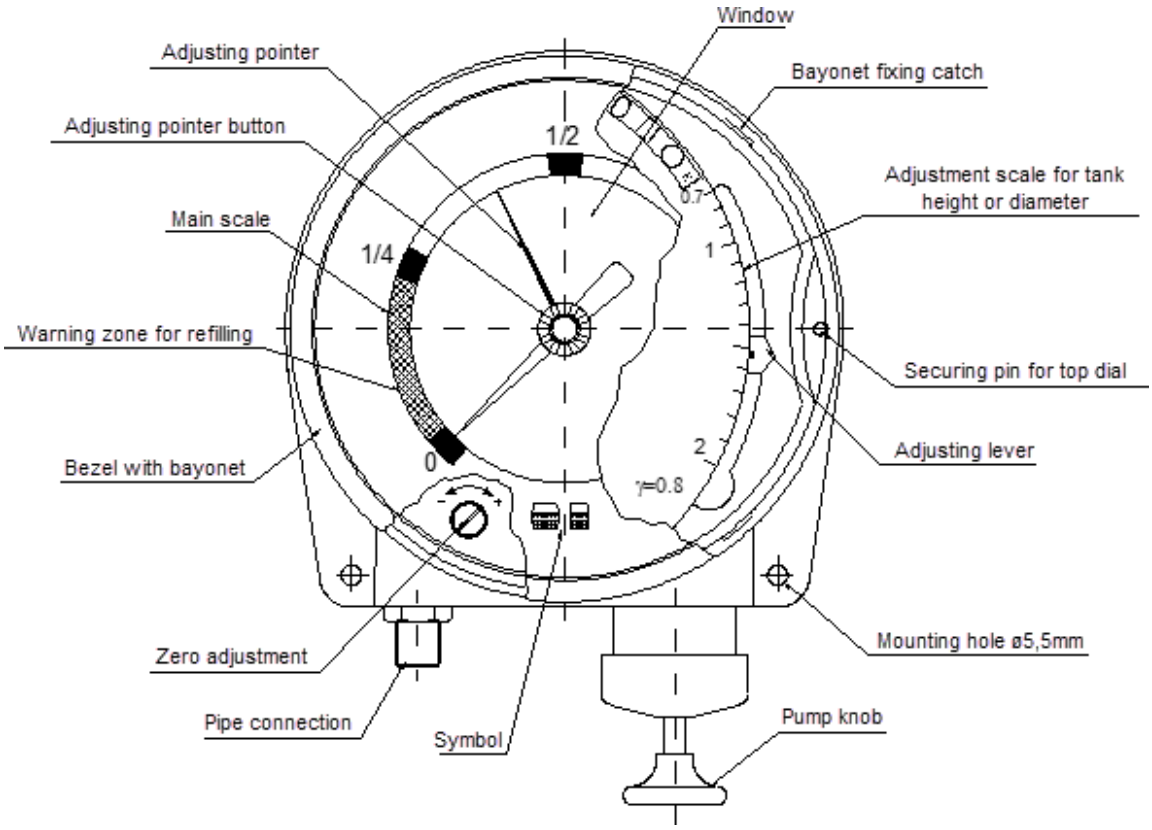

Adjustment

1. Meter the exact height.
2. Detach the bezel with bayonet fixing, by turning it CCW approx. 1” (until it stops). Carefully pull off the bezel and the cover glass. Hold the annular top dial by the sides and pull it off the securing pins.
3. Use the tables on the following page and find the conversion factor based on tank height and oil density (normally 0,88 for ISO 68). Place the adjusting lever accordingly.
4. Perform 0-adjustment by turning the slotted screw CW or CCW maximum 1 revolution until the pointer shows 0 on the main dial. Confirm the 0-adjustment by tapping the case lightly and readjust as necessary.
5. Replace the top dial on the securing pins by pressing lightly. Please note that the standard dial is printed on both sides (0-1/4-1/2-3/4-1). The circular symbol is for horizontal round or oval tanks, while the rectangular symbol is for vertical and cubic tanks
6. Place the cover glass with the adjusting pointer on the front of the casing and make sure that the securing pins fit into the recess in the cover glass. Vent the leakage pipe by turning the coupling 1-2 rotations.
7. Put on the bezel by pressing the cover glass lightly against the casing and secure the bezel with bayonet fixing by turning CW approx. 1” (until it stops).

NEUVER MARITIME PROPRIETARY. This document and its accompanying elements contain NEUVER MARITIME information which is proprietary and confidential. Any disclosure, copying, distribution or use is prohibited if not otherwise explicitly agreed with NEUVER MARITIME in writing. Any authorized reproduction, in whole or in part, must include this legend. ©2026 NEUVER MARITIME - All rights reserved.

Height measurements for setting:

Settings for Power Packs w/ integrated storage tanks (oil density 0,88):

Power Pack model	Tank Volume	Internal Height	Haenni Setting
PPSI 2” - small	2X300L + 450L	672 mm	0,74
PPSI 2” - Low	2X350L + 600L	613 mm	0,67
PPSI 2” – 4 Vane	2X700L + 1100L	648 mm	0,71
PPSI 3” – 4 Vane	2X1000L + 1650L	785 mm	0,86

Settings for separate storage tanks (oil density 0,88):

Tank (item no.)	Tank Volume	Internal Height	Haenni Setting
13423	500L	1000 mm	1,10
13345	1050L	1400 mm	1,54
13402	1350L	1800 mm	1,98
13225	2000L	1800 mm	1,98

Complete Conversion table:

	Tank Height or Tank Diameter in meters													
Density	0,7	0,8	0,9	1,0	1,1	1,2	1,3	1,4	1,5	1,6	1,7	1,8	1,9	2,0
0,84	0,74	0,84	0,95	1,05	1,16	1,26	1,37	1,47	1,58	1,68	1,79	1,89	1,99	2,10
0,86	0,75	0,86	0,97	1,07	1,18	1,29	1,40	1,50	1,61	1,72	1,83	1,93	2,04	2,15
0,88	0,77	0,88	0,99	1,10	1,21	1,32	1,43	1,54	1,65	1,76	1,87	1,98	2,09	2,20
0,90	0,79	0,90	1,01	1,12	1,24	1,35	1,46	1,57	1,69	1,80	1,91	2,02	2,14	2,25
0,92	0,81	0,92	1,04	1,15	1,27	1,38	1,50	1,61	1,73	1,84	1,96	2,07	2,18	2,30

NEUVER MARITIME PROPRIETARY. This document and its accompanying elements contain NEUVER MARITIME information which is proprietary and confidential. Any disclosure, copying, distribution or use is prohibited if not otherwise explicitly agreed with NEUVER MARITIME in writing. Any authorized reproduction, in whole or in part, must include this legend. ©2026 NEUVER MARITIME - All rights reserved.

Operation and Gauging

When performing gauging:

1. Pull the pump handle downwards until it stops and release
2. Observe the movement of the indicator
3. The position where the indicator stops will be the contents (tank) level.

NOTE!

Gauging shall not be done during filling.

Faultfinding

Fault	Possible reason	Action
The pointer goes beyond the max value on scale.	The connection pipe is blocked.	Disconnect the connection pipe from the instrument and check pipe for any obstructions.
	The measurement range of the instrument is set incorrect.	Check tank height or tank diameter setting.
The instrument gives no reading, or the reading is too low.	Leak on the connection pipe or at the pump piston.	Tighten the screw connections and check the seal ring on the pump piston.
	Tank is empty	
	The measurement range of the instrument is set wrongly.	Check tank height or tank diameter setting.

Item

Item No	Description
HANNI 493	Complete gauge
70245_FR	Window (glass)

NEUVER MARITIME PROPRIETARY. This document and its accompanying elements contain NEUVER MARITIME information which is proprietary and confidential. Any disclosure, copying, distribution or use is prohibited if not otherwise explicitly agreed with NEUVER MARITIME in writing. Any authorized reproduction, in whole or in part, must include this legend. ©2026 NEUVER MARITIME - All rights reserved.

11.9. Cleaning of Water/Oil Cooler

Clogging will reduce the heat transfer capacity of the Water/Oil cooler. Methods for establishing a clogging problem:

- Check water inlet and outlet temperature. Clogging results in reduced difference in water inlet and outlet temperatures and a rise in oil temperature.
- Check for a pressure drop across the cooler. Clogged and narrow passages will cause acceleration in flow rate and increased pressure drop.

If temperature or pressure measuring reveals a clogged cooler:

1. Clean the Water/Oil cooler by removing all minor deposits by back flushing the cooler with water.

Fouling can be dealt with using a light acid.

2. Use 5% phosphoric acid or, when cleaned frequently, 5% oxalic acid or similar light organic acid.
3. Rinse the cooler with a large quantity of water.

NOTE!

Make sure all acids are removed before restarting the system.

NEUVER MARITIME PROPRIETARY. This document and its accompanying elements contain NEUVER MARITIME information which is proprietary and confidential. Any disclosure, copying, distribution or use is prohibited if not otherwise explicitly agreed with NEUVER MARITIME in writing. Any authorized reproduction, in whole or in part, must include this legend. ©2026 NEUVER MARITIME - All rights reserved.

11.10. Cleaning of Air/Oil Cooler

WARNING!

- The Air/Oil cooler can be hot during operation. Make sure that the Air/Oil cooler is cool before touching.
- There is a warning label fitted to the air oil cooler at delivery, high temperature surface, use ear defenders, rotating fan. Always replace a damaged or missing label.
- The fan can generate static electricity by air friction. Do not put sensitive equipment (electronics etc.) in the immediate vicinity of the cooling system.

NOTE!

- When cleaning the exterior of the cooler, for instance using water, be aware of the electric motor protection standard.
- The manufacturers are not to be held responsible for any consequences due to inside cleaning of the pump.

1. Ensure all power is disconnected.
2. Clean the air fins of the matrix by blowing through with compressed air. If using a high-pressure washing system, point the jet perpendicular to the air fins, as illustrated.
3. Make sure the system is depressurized and disconnect the hydraulic pipes from the cooler matrix.
4. Loosen the screws with washer [1] fixing the cooler matrix to the fan housing, as illustrated.
5. Remove the cooler matrix.
6. Clean the inside of the fan housing by using compressed air, blow with compressed air from the electric motor side through the fan guard.
7. Refit the cooler matrix to the fan housing by fastening the screws with washer [1].
8. Connect the flexible hydraulic hoses to the cooler matrix.
9. Connect the electric motor power supply.

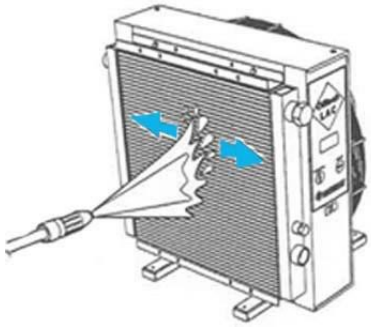

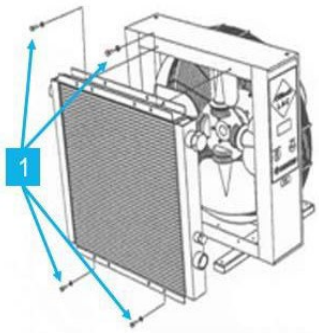

NEUVER MARITIME PROPRIETARY. This document and its accompanying elements contain NEUVER MARITIME information which is proprietary and confidential. Any disclosure, copying, distribution or use is prohibited if not otherwise explicitly agreed with NEUVER MARITIME in writing. Any authorized reproduction, in whole or in part, must include this legend. ©2026 NEUVER MARITIME - All rights reserved.

10. Prior to start-up, check:
    - The matrix and fan guard for damage
    - That all hydraulic connections are tight
    - That the cooling system is correctly connected
    - That valves and similar components are open at start

11. When starting, check:
    - Noise level
    - Fan direction

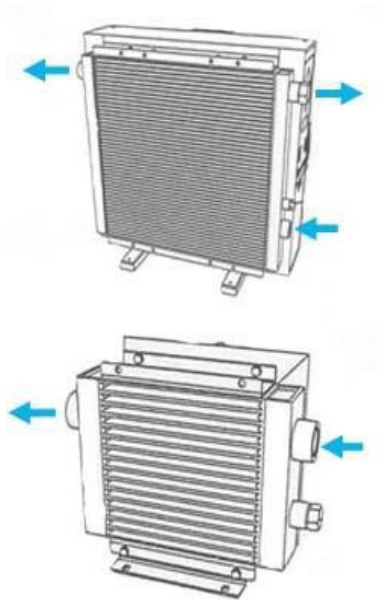

NEUVER MARITIME PROPRIETARY. This document and its accompanying elements contain NEUVER MARITIME information which is proprietary and confidential. Any disclosure, copying, distribution or use is prohibited if not otherwise explicitly agreed with NEUVER MARITIME in writing. Any authorized reproduction, in whole or in part, must include this legend. ©2026 NEUVER MARITIME - All rights reserved.

11.11. FB40 Feedback Inspection

To verify that the transmitter arrangement is correctly installed, please go through all checkpoints in the list below.

NOTE!

Before proceeding with the inspection, make sure to switch motor control cabinet to “LOCAL CONTROL” position to avoid unintended operation of the Steering Gear while work is carried out.

Figure 1

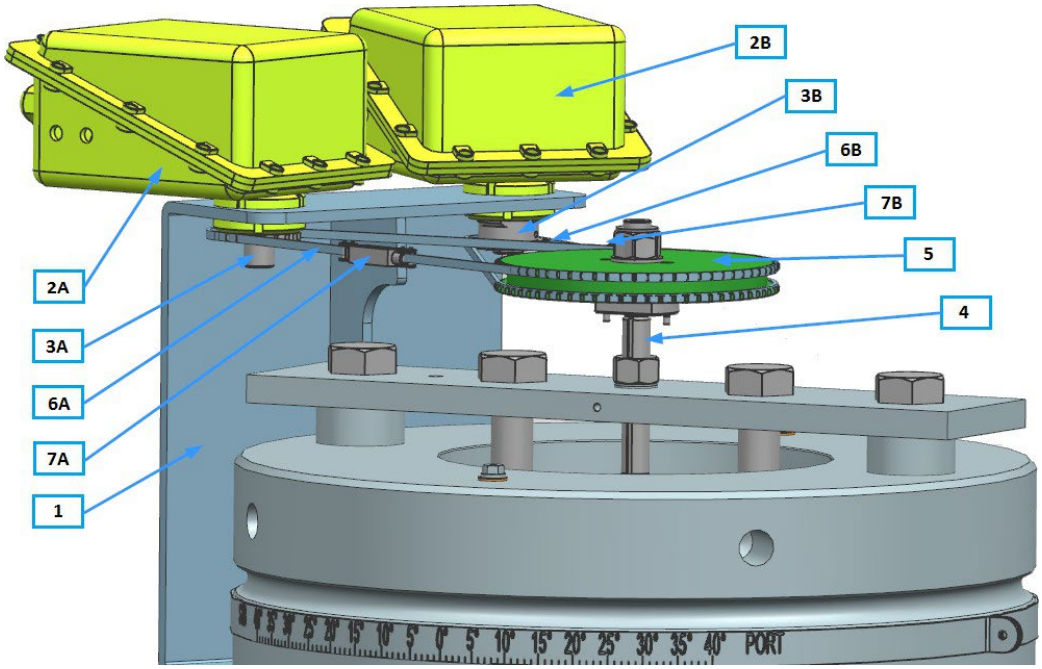

Item	Component	Description	Reference	Status	Sign
1.	Feedback Units	Make sure the locking nuts [15] is properly tightened.	Figure 2		
2.	Shaft [4]	Check that the center shaft is locked against rotation in the flat bar on the rudderstock/hydraulic nut by tightening the lower nut and securing it with a counter nut, each properly tightened. Tightening torque; Lower nut, lightly oiled threads – 160 Nm	Figure 1		

NEUVER MARITIME PROPRIETARY. This document and its accompanying elements contain NEUVER MARITIME information which is proprietary and confidential. Any disclosure, copying, distribution or use is prohibited if not otherwise explicitly agreed with NEUVER MARITIME in writing. Any authorized reproduction, in whole or in part, must include this legend. ©2026 NEUVER MARITIME - All rights reserved.

Item	Component	Description	Reference	Status	Sign
		Counter nut, lightly oiled threads – 100 Nm			
3.	Chains [6A, 6B]	The chain shall travel horizontally; make sure the chains is not climbing.	Figure 1		
4.	Chain tensioners	Check that the chain tensioners is positioned halfway between the two chain wheels when the rudder is in center position.	Figure 1		
5.	Chain tensioners	Check that the chain tensioners is pre-tensioned according to figure 8, 5mm is ideal, but 4-10mm can be accepted. Pre-tension obtained by adjusting position of bracket.	Figure 3		
6.	Feedback Unit	With one of the pump units activated, operate the Steering Gear to maximum rudder angle Port and maximum rudder angle Stbd. Confirm that correct angle limit is achieved for both directions.			
7.	Feedback Unit	Repeat the above test with the opposite pump unit activated.			

Figure 2

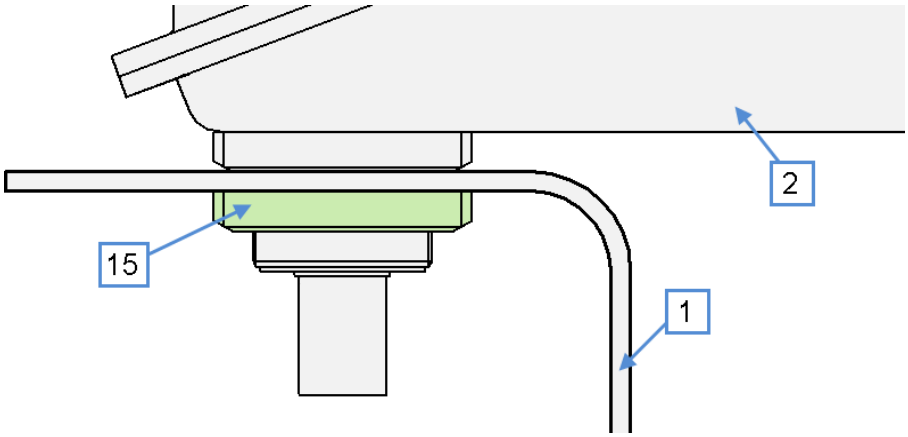

Figure 3

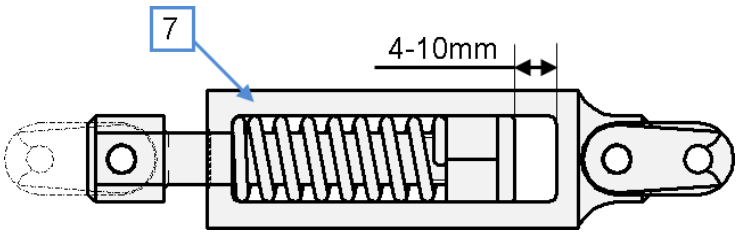

NEUVER MARITIME PROPRIETARY. This document and its accompanying elements contain NEUVER MARITIME information which is proprietary and confidential. Any disclosure, copying, distribution or use is prohibited if not otherwise explicitly agreed with NEUVER MARITIME in writing. Any authorized reproduction, in whole or in part, must include this legend. ©2026 NEUVER MARITIME - All rights reserved.

11.12. Stuffing Box (if NEUVER delivery)

When manufacturing the Walker seal, each ring is cast in one piece in a mold. The reverse side of the Walker seal is made from a synthetic rubber-proofed cotton fabric and the lip from a high nitrile base, synthetic rubber with a hardness of 80 IRHD.

The walker seal ring is equipped with a compression element with a length of 30-50 mm depending on size of ring. After the casting is complete, the ring is split in the middle of this compression element. This compression element is made of rubber only, and the purpose of this element is to absorb the necessary compression created at installation. In special cases, it can be used for small adjustment of the length of the Walker seal prior to installation.

During installation, there should be a pressure in the joint, leading to pressure in the compression element. Without this pressure, there will most likely be a leakage in the joint since the ends of the Walker seal can slide away from each other. The gap created will then lead to a leakage.

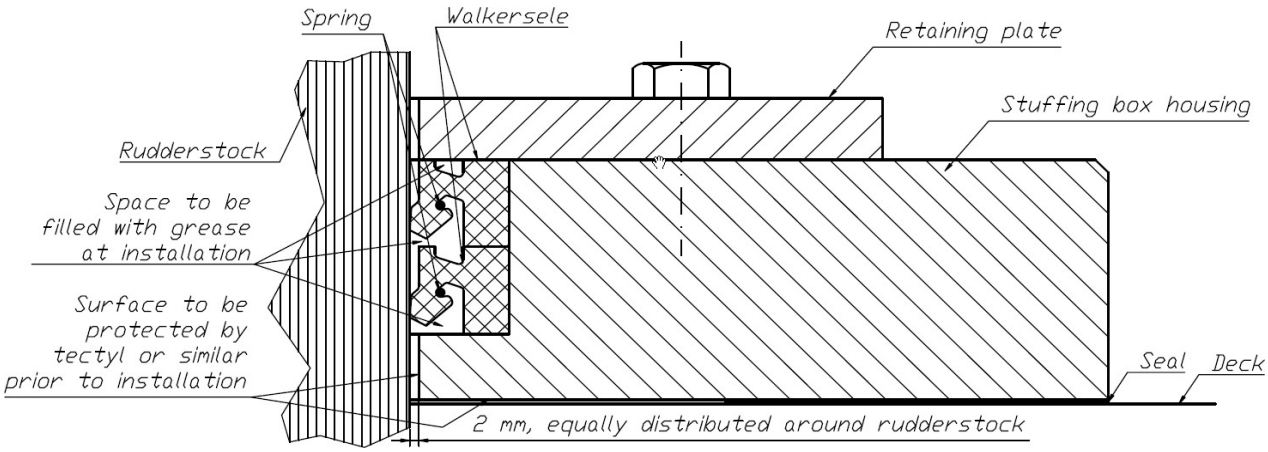

Seal lubrication:

A liberal lubrication during assembly will ensure lubrication from the start. During operation, the seals should be checked on a weekly basis and grease added once a month as necessary.

Preparations:

The Stuffing Box should be mounted on a levelled deck. In order to avoid sea water from penetrating between Stuffing Box housing and deck a separate seal between deck and housing to be used. A seal for this purpose is supplied with the Stuffing Box. The maximum curvature on the levelled deck when using this seal is 1 mm across the Stuffing Box surface.

NEUVER MARITIME PROPRIETARY. This document and its accompanying elements contain NEUVER MARITIME information which is proprietary and confidential. Any disclosure, copying, distribution or use is prohibited if not otherwise explicitly agreed with NEUVER MARITIME in writing. Any authorized reproduction, in whole or in part, must include this legend. ©2026 NEUVER MARITIME - All rights reserved.

11.13. Function Test of Alarm System

Please follow below procedure in order to complete a function test of the alarms on the alarm system installed.

NOTE!

There is a 5 sec delay in the alarm system. If any alarm is present in the alarm system, the auto start will not work, so please check all alarms on the alarm panel before you test the next alarm.

Alarm test	
Overload	Test Push Button
Phase failure	Remove fuse F17
Power failure	Turn of main switch
Power control failure	Turn selector switch to position 2
Low oil level	Disconnect sensor from PP
Hydraulic lock	Keep selector switch in remote and operate the Steering Gear locally
Clogged filter	Disconnect sensor from PP
High oil temp	Disconnect sensor from PP
Low oil pressure	Close handle before starting the pump
Power failure aux. steering	Remove fuse F41-42-43-44

Overload alarm:

Push the test button on the overload relay in motor controller. The stand-by pump should start if not already running.

Phase failure alarm:

Remove one of the fuses supplying the phase failure monitoring relay in the motor controller cabinet, the stand-by pump should start if not already running.

Power failure:

Turn of main switch S1 in the motor controller or the circuit breaker from switch board. The stand-by pump should start if not already running.

Power control failure alarm:

Set the S2 selector switch located on the outside of the motor controller cabinet to local control or stop, the stand-by pump should start if not already running.

NEUVER MARITIME PROPRIETARY. This document and its accompanying elements contain NEUVER MARITIME information which is proprietary and confidential. Any disclosure, copying, distribution or use is prohibited if not otherwise explicitly agreed with NEUVER MARITIME in writing. Any authorized reproduction, in whole or in part, must include this legend. ©2026 NEUVER MARITIME - All rights reserved.

Low oil level alarm:

Disconnect the connection plug on top of the expansion tank. The stand-by pump should start if not already running.

Hydraulic lock alarm:

Activate manual solenoid in either direction while the motor controller is in remote control. Keep activated for more than 5 seconds.

The stand-by pump should start if not already running.

Clogged filter:

Remove the plug on the filter sensor. This alarm does not include an auto start of the stand-by pump.

High oil temp:

Remove the plug on the temperature sensor. This alarm does not include an auto start of the stand- by pump.

Aux alarm:

Missing feedback from Steering Gear to the control system.

Locate the U10 module inside the control system cabinet. Remove the feedback line wires on terminals 9 to 11. Alarm should appear after 5 seconds. Vessels with DP2 class or higher also have “rudder freeze” due to this alarm.

NEUVER MARITIME PROPRIETARY. This document and its accompanying elements contain NEUVER MARITIME information which is proprietary and confidential. Any disclosure, copying, distribution or use is prohibited if not otherwise explicitly agreed with NEUVER MARITIME in writing. Any authorized reproduction, in whole or in part, must include this legend. ©2026 NEUVER MARITIME - All rights reserved.

11.14. Adjustment of Rudder Angle Indicator System

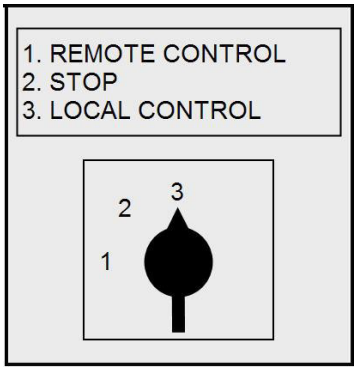

1. Set the selector switch the Motor Controller to position 3 “LOCAL CONTROL".
2. Move rudder to zero position with the port/starboard push buttons.
3. Set the selector switch the Motor Controller to position 2 “STOP".
4. Remove the cover on the feedback unit.
5. At the terminal block, disconnect the red wire [2] to the center point of the feedback potentiometer and the end points; green [3] and yellow wires [4].
6. Measure the resistance between one end point and midpoint, red-green and red-yellow wire. The resistance should be approx. 2,5 kΩ. The resistance between each end point and midpoint must be equal.
7. If necessary, loosen the locking screws [5] and turn the potentiometer [6] until resistance between the end points and midpoint to each side is equal.
8. Tighten the locking screws [5].
9. Reconnect the red wire [2], green wire [3] and yellow wire [4] to the terminal block.
10. Install the feedback unit cover.

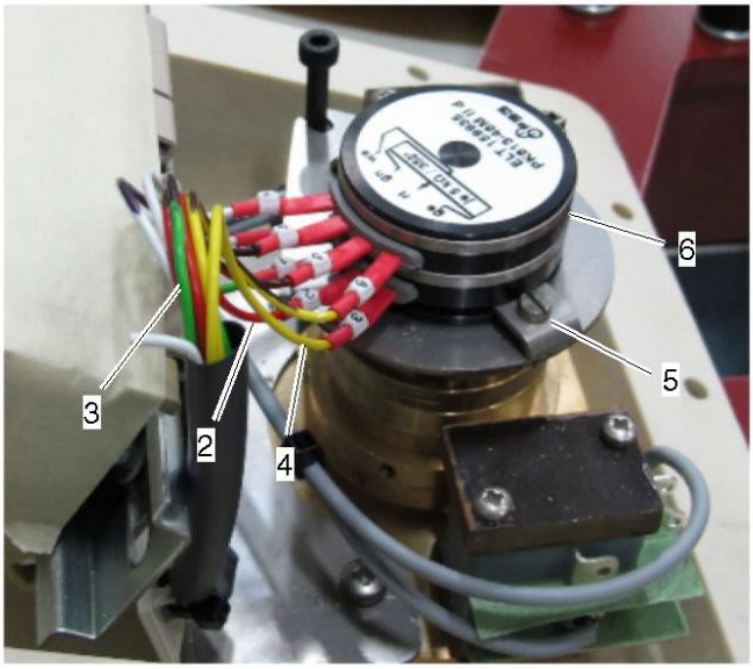

NEUVER MARITIME PROPRIETARY. This document and its accompanying elements contain NEUVER MARITIME information which is proprietary and confidential. Any disclosure, copying, distribution or use is prohibited if not otherwise explicitly agreed with NEUVER MARITIME in writing. Any authorized reproduction, in whole or in part, must include this legend. ©2026 NEUVER MARITIME - All rights reserved.

11.15. Adjustment of Rudder Angle Indicator Amplifier (if NEUVER delivery)

1. Check that the Steering Gear is in zero position according to the mechanical rudder angle indicator on the actuator.
2. If the rudder indicators are out of zero position, a zero adjustment can be done on the rudder indicator amplifier adjuster P20 (2) (+/- 2 degrees).
3. Operate the Steering Gear manually from the Steering Gear room until the mechanical rudder indicator reaches 35° port.
4. If required, adjust the gain (P30) (3) on the rudder indicator amplifier until the one of the rudder indicators show 35° port. Additional rudder indicators can be adjusted separately if necessary.

NOTE!

Independent adjustments can be made on each rudder indicator by means of integrated gain controls on each indicator.

Rudder angle indicator amplifier

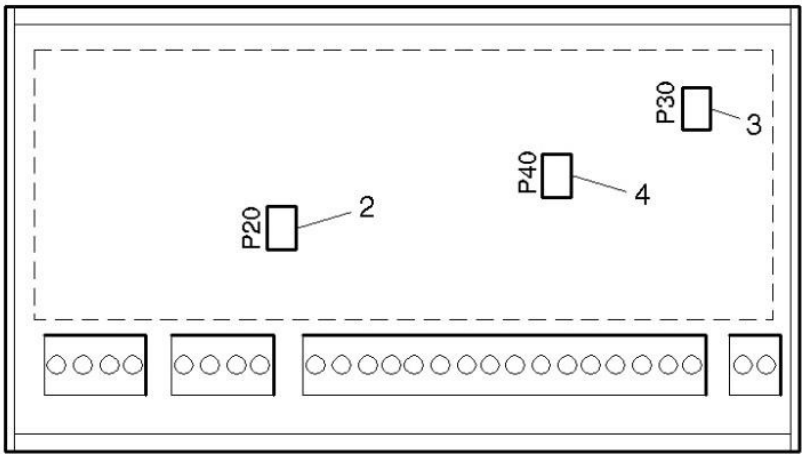

5. If required, adjust the galvanic isolated +/- 10V rudder position signals as follows:
   - Position the Steering Gear 5° before the Steering Gear mechanical stop.
   - Adjust the P40 (4) until the rudder position signal equals 9V.

NEUVER MARITIME PROPRIETARY. This document and its accompanying elements contain NEUVER MARITIME information which is proprietary and confidential. Any disclosure, copying, distribution or use is prohibited if not otherwise explicitly agreed with NEUVER MARITIME in writing. Any authorized reproduction, in whole or in part, must include this legend. ©2026 NEUVER MARITIME - All rights reserved.

11.16. Adjustment of Limit Switches in Feedback Unit

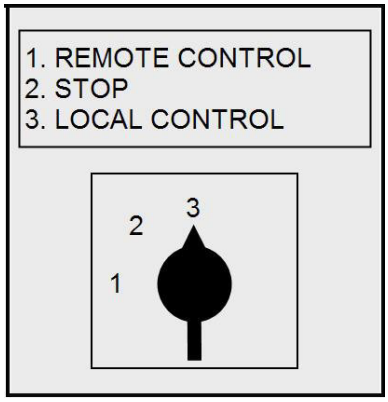

1. Set the Steering Gear Motor Controller switches to position 3
2. “LOCAL CONTROL”.
3. Remove the cover of the feedback unit which limit switches are to be adjusted.
4. Loosen the nut installed on top of the cam rings.
5. Use a hexagonal key to open the locking screws [2].
6. Move the Steering Gear to the limit switch position.

The tripping cams are adjusted to interrupt the steering signal at max. electrical rudder angle. This value can be found in chapter 5 of the Electrical User Manual.

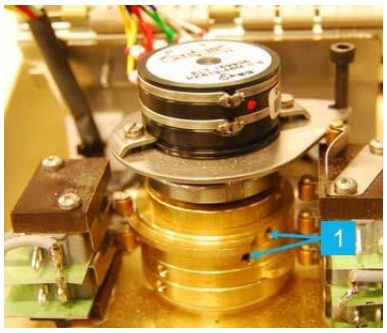

7. Adjust the position of each ring [2].
8. Tighten the locking screws [1] using a hexagonal key.
9. Replace the feedback unit cover.

NEUVER MARITIME PROPRIETARY. This document and its accompanying elements contain NEUVER MARITIME information which is proprietary and confidential. Any disclosure, copying, distribution or use is prohibited if not otherwise explicitly agreed with NEUVER MARITIME in writing. Any authorized reproduction, in whole or in part, must include this legend. ©2026 NEUVER MARITIME - All rights reserved.

11.17. Adjustment of Amplifier Card (if NEUVER delivery)

1. Start the pumps from the main control panel.
2. Set the switch to follow-up steering [1] mode.
3. Move the selected controller [2] to 30 degrees port or starboard side.
4. Adjust gain on amplifier card P20 [4] until the position of the Steering Gear is 30 degree.
5. Increase sensitivity setting on adjuster P60 [3] (clockwise) until the follow-up system starts
6. oscillating on rudder commands. The oscillation can be observed on the 4 LED (ordered signal port/starboard for each pump) on front of the amplifier card.
7. Adjust P60 [3] counterclockwise one-half turn to remove oscillation.
8. Turn the controller and check for oscillation. If oscillations are present repeat step 6 until oscillation stops.

Control system amplifier card

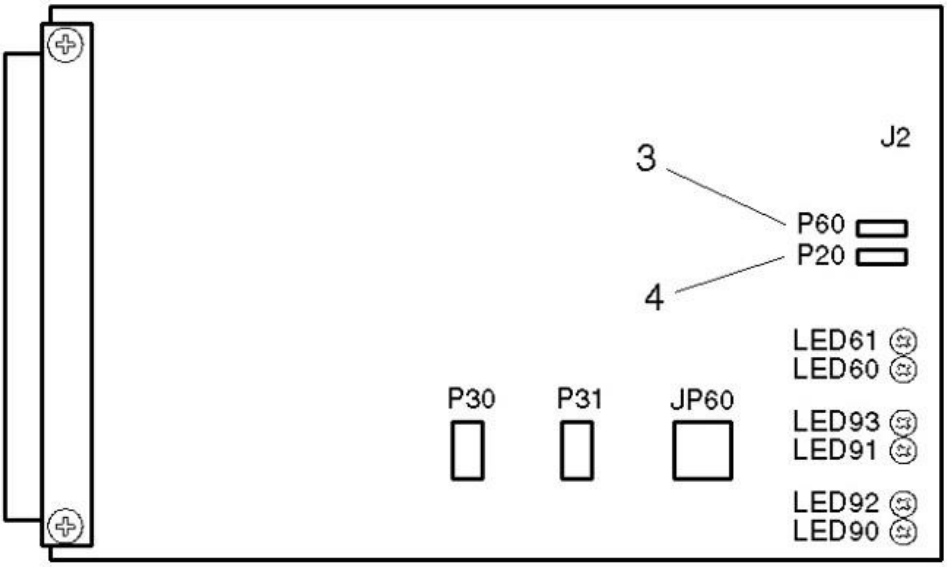

NEUVER MARITIME PROPRIETARY. This document and its accompanying elements contain NEUVER MARITIME information which is proprietary and confidential. Any disclosure, copying, distribution or use is prohibited if not otherwise explicitly agreed with NEUVER MARITIME in writing. Any authorized reproduction, in whole or in part, must include this legend. ©2026 NEUVER MARITIME - All rights reserved.

11.18. Adjustment of FU-Controller (if NEUVER delivery)

1. Start the pumps from the main control panel.
2. Push the corresponding “IN COMMAND“ button [1] to engage the follow-up controller.
3. Operate the controller to mid-ship command and make sure that the rudder position to mid-ship position is correctly aligned. If it is misaligned loosen the clamp screw [2] adjust the 0-point and turn the potentiometer [3] until rudder mid-ship position is correctly aligned.
4. Operate the selector controller to 30 degrees port or starboard direction.
5. Make sure that the rudder position is correctly aligned. If not, adjust the potentiometer.
6. Tighten the clamp screw [2].

NEUVER MARITIME PROPRIETARY. This document and its accompanying elements contain NEUVER MARITIME information which is proprietary and confidential. Any disclosure, copying, distribution or use is prohibited if not otherwise explicitly agreed with NEUVER MARITIME in writing. Any authorized reproduction, in whole or in part, must include this legend. ©2026 NEUVER MARITIME - All rights reserved.

11.19. Replacement of Alarm System Card

1. At the bridge distribution board, make sure that the power supply to the alarm system is switched off
2. Open the alarm panel.
3. Loosen the alarm system card(s) connection.
4. Remove the alarm system card(s).
5. Set the X8 and X9 nodes on the new card to the same as the defective card and install the alarm system card(s).
6. Tighten the alarm system card/cards connection.
7. Close the alarm system panel.
8. Turn on the power supply.

NEUVER MARITIME PROPRIETARY. This document and its accompanying elements contain NEUVER MARITIME information which is proprietary and confidential. Any disclosure, copying, distribution or use is prohibited if not otherwise explicitly agreed with NEUVER MARITIME in writing. Any authorized reproduction, in whole or in part, must include this legend. ©2026 NEUVER MARITIME - All rights reserved.

11.20. Replacement of Pump Control Card

1. Switch off the main power supply to the control system by disconnecting the power supply to the corresponding motor controller.
2. Open the control system cabinet.
3. Disconnect all connected wires from the pump control card.
4. Loosen the four screws securing the pump control card.
5. Replace the faulty pump control card.
6. Tighten the screws securing the card.
7. Connect all the wires.
8. Verify that all jumpers (JP1, JP2 and JP3) are in correct position.
9. Close the control system cabinet.
10. Turn on the main power supply to the control system
11. Perform adjustment of backlight level using TP1 and measure the voltage difference between X3.4 and X3.5 terminals. Set voltage to 11V fir incandescent lamps and 5V for LEDs. Make sure that the controlled pump is not running during adjustment.

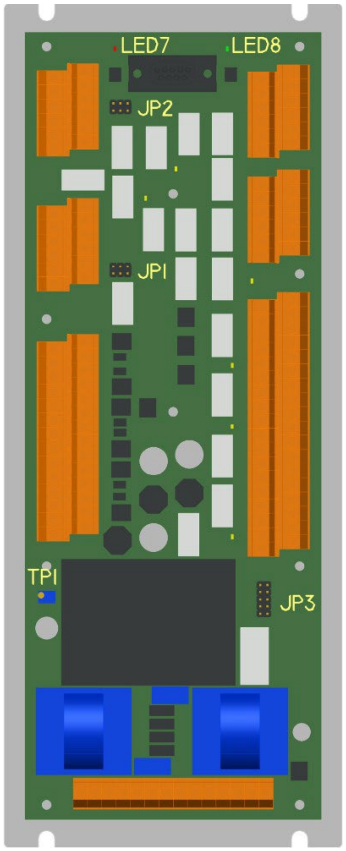

NEUVER MARITIME PROPRIETARY. This document and its accompanying elements contain NEUVER MARITIME information which is proprietary and confidential. Any disclosure, copying, distribution or use is prohibited if not otherwise explicitly agreed with NEUVER MARITIME in writing. Any authorized reproduction, in whole or in part, must include this legend. ©2026 NEUVER MARITIME - All rights reserved.

11.21. Replacement of Amplifier Card

NOTE!

- Electrostatic discharges can damage components.
- To prevent damage always use a grounded electrostatic discharge bracelet while work is on going.

1. Switch off the main power supply to motor controller by turning the S1 isolating switch.
2. Open the control system cabinet.
3. Use the EDS wristband.
4. Remove the faulty amplifier card [1].
5. Install the new amplifier card [1].
6. Switch on the S1 isolation switch in the motor controller.
7. Close the motor controller doors.
8. Adjust the amplifier card as detailed in chapter 11.17 Adjustment of Amplifier Card (if NEUVER delivery)

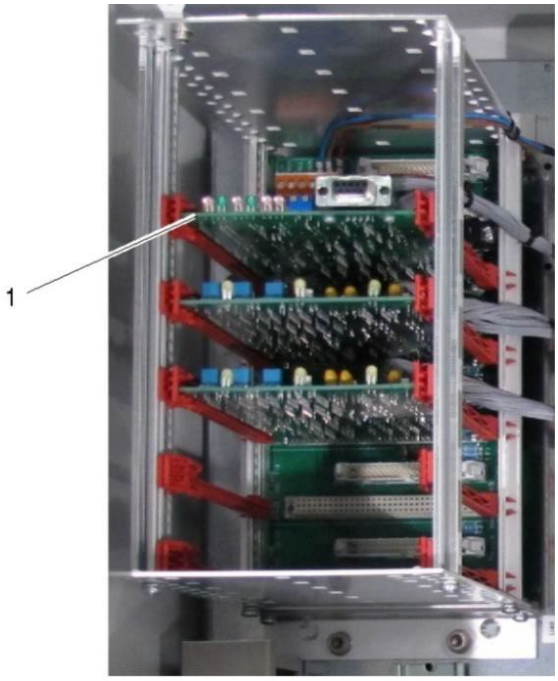

NEUVER MARITIME PROPRIETARY. This document and its accompanying elements contain NEUVER MARITIME information which is proprietary and confidential. Any disclosure, copying, distribution or use is prohibited if not otherwise explicitly agreed with NEUVER MARITIME in writing. Any authorized reproduction, in whole or in part, must include this legend. ©2026 NEUVER MARITIME - All rights reserved.

11.22. Replacement of Selector Card

WARNING!

- Electrostatic discharges can damage components.
- To prevent damage always use a grounded electrostatic discharge bracelet while work is on going.

1. Switch off the main power supply to motor controller by turning the S1 isolating switch.
2. Open the control system cabinet.
3. Use the EDS wristband.
4. Remove the defective selector card [1]
5. Set the jumper settings on the new card to the same as the defective card.
6. Install the new card.
7. Close the controls system cabinet.
8. Switch on the S1 isolation switch in the motor controller.

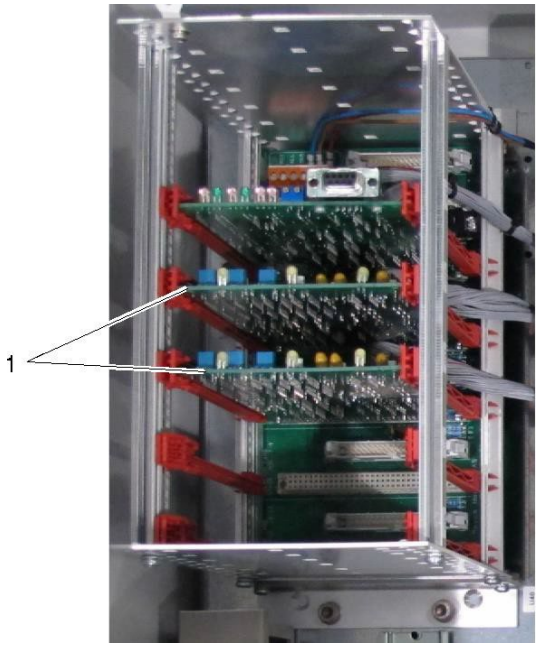

NEUVER MARITIME PROPRIETARY. This document and its accompanying elements contain NEUVER MARITIME information which is proprietary and confidential. Any disclosure, copying, distribution or use is prohibited if not otherwise explicitly agreed with NEUVER MARITIME in writing. Any authorized reproduction, in whole or in part, must include this legend. ©2026 NEUVER MARITIME - All rights reserved.

11.23. Replacement of Start Relay

1. Ensure power supply to the motor controller is switched off.
2. Locate the defect relay.
3. Loosen all connection wires [1].
4. Loosen screws [2] on start relay.
5. Renew relay.
6. Refit wires and screws.
7. Turn on power supply.

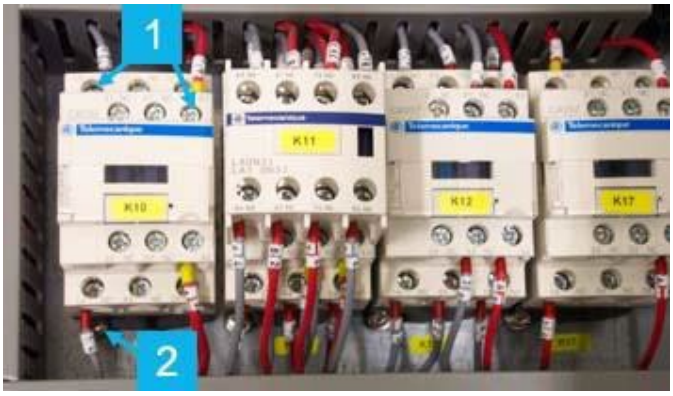

NEUVER MARITIME PROPRIETARY. This document and its accompanying elements contain NEUVER MARITIME information which is proprietary and confidential. Any disclosure, copying, distribution or use is prohibited if not otherwise explicitly agreed with NEUVER MARITIME in writing. Any authorized reproduction, in whole or in part, must include this legend. ©2026 NEUVER MARITIME - All rights reserved.

11.24. Replacement of Solenoid Driver

1. Ensure power supply to the motor controller cabinet is switched off.
2. Loosen all connected wires.
3. Unclip the driver form the rail.
4. Renew the solenoid driver [1].
5. Refit and secure all terminal screws.

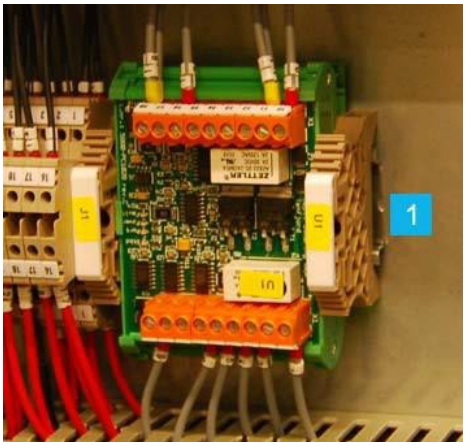

NEUVER MARITIME PROPRIETARY. This document and its accompanying elements contain NEUVER MARITIME information which is proprietary and confidential. Any disclosure, copying, distribution or use is prohibited if not otherwise explicitly agreed with NEUVER MARITIME in writing. Any authorized reproduction, in whole or in part, must include this legend. ©2026 NEUVER MARITIME - All rights reserved.

11.25. Replacement of Limit Switches in Feedback Units

1. Switch off the main power supply to Motor Controller by turning off the S1 isolating switch.
2. Remove the cover on the feedback unit.
3. Identify the defective limit switch [2].
4. Loosen the screws [1] on top of the switch assembly.
5. Using a soldering iron, release the wiring from the switch.
6. Solder the wiring to the new limit switch.
7. Tighten the screws [1] on top of the switch assembly.
8. Switch on the power by turning the S1 isolation switch inside the motor controller.
9. Adjust the limit switch as detailed in chapter 11.16 Adjustment of Limit Switches in Feedback Unit
10. Install the cover on the feedback unit.

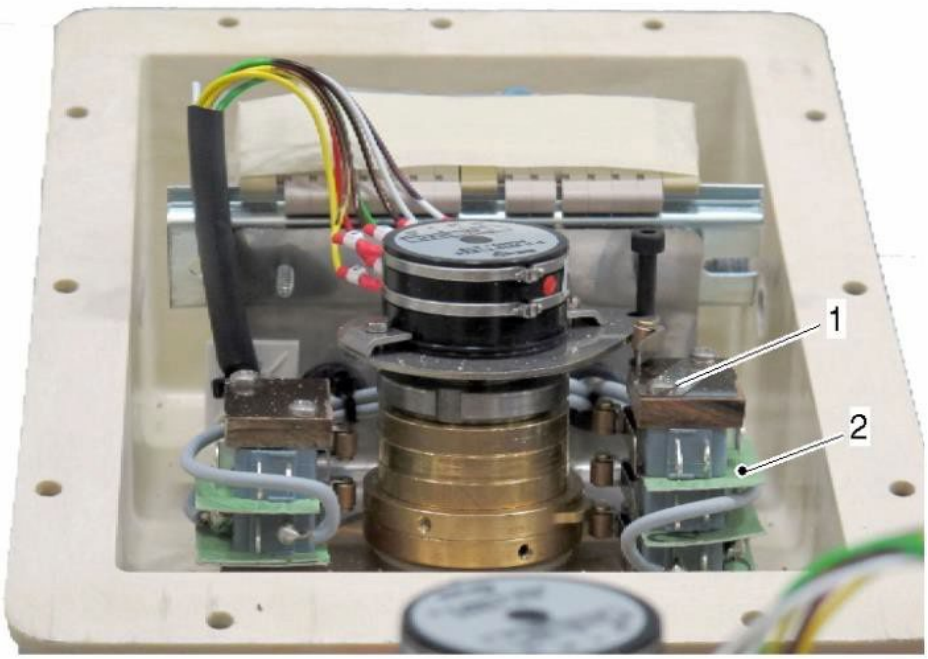

NEUVER MARITIME PROPRIETARY. This document and its accompanying elements contain NEUVER MARITIME information which is proprietary and confidential. Any disclosure, copying, distribution or use is prohibited if not otherwise explicitly agreed with NEUVER MARITIME in writing. Any authorized reproduction, in whole or in part, must include this legend. ©2026 NEUVER MARITIME - All rights reserved.

11.26. Replacement of Proximity Switch

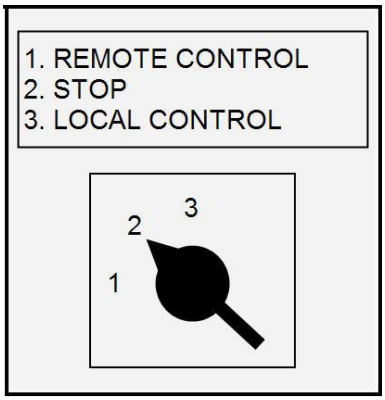

1. Set the selector switch on motor control cabinet to position 2 “STOP".
2. There will be slight oil spill. Place a suitable container under the sensors to be replaced.
3. Disconnect the wires in the connection box for the sensor to be replaced. Note the positions of the coloured wires in the terminals.
4. Release the locknut [1] and unscrew the sensor [2] from the end housing.
5. Mount the new sensor, and make sure it is adjusted to correct length “L”. See illustration and table below.
6. Fasten the locknut [1].
7. Connect the wires in the connection box.
8. Turn selector switch on Motor Controller back to position 1 “REMOTE CONTROL".

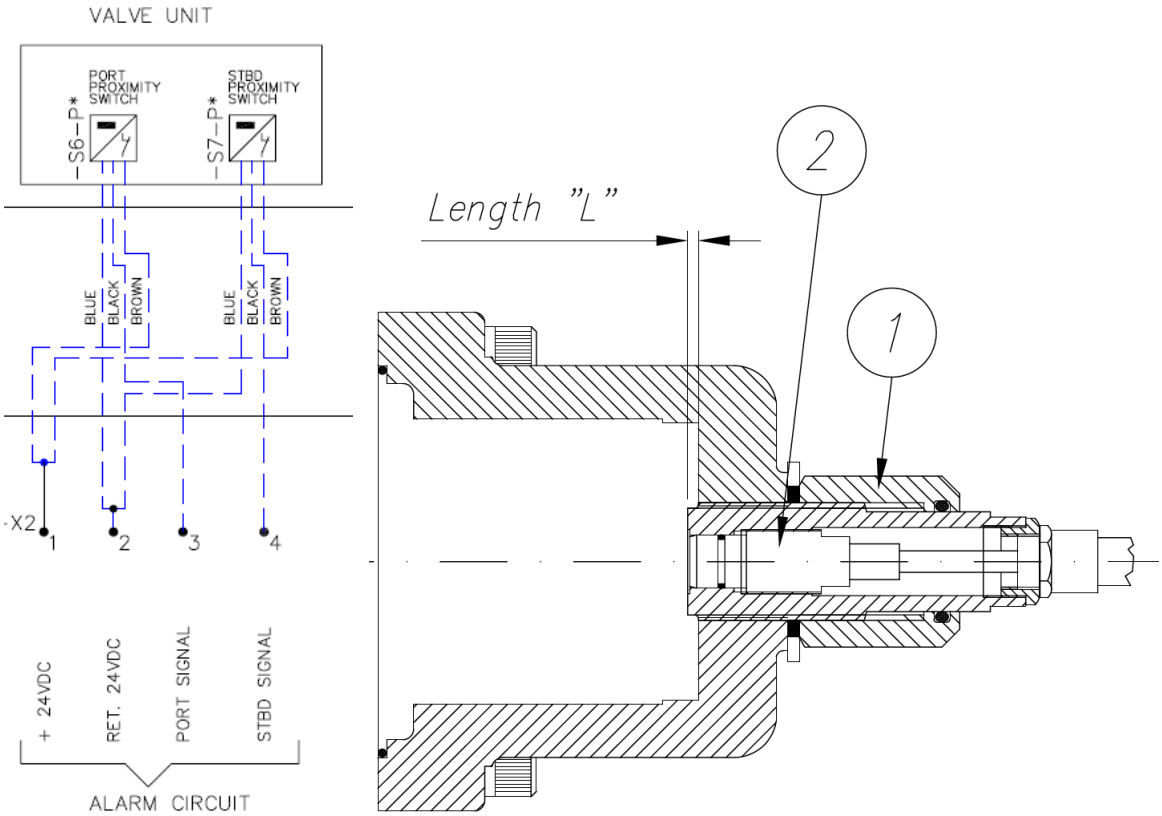

NEUVER MARITIME PROPRIETARY. This document and its accompanying elements contain NEUVER MARITIME information which is proprietary and confidential. Any disclosure, copying, distribution or use is prohibited if not otherwise explicitly agreed with NEUVER MARITIME in writing. Any authorized reproduction, in whole or in part, must include this legend. ©2026 NEUVER MARITIME - All rights reserved.

2” Control valve	
Type	**“L”**
RV 850-4	5 mm
RV 1050-4	5 mm
RV 1450-4	5 mm
RV 1850-4	5 mm
RV 2300-4	4 mm
RV 2600-4	4 mm
RV 3500-4	3 mm
RV 3900-4	3 mm
RV 5500-2	3 mm
RV 6550-4	3 mm

2” Control/Lock valve	
Type	**“L”**
RV 850-4	9 mm
RV 1050-4	9 mm
RV 1450-4	9 mm
RV 1850-4	9 mm
RV 2300-4	8 mm
RV 2600-4	8 mm
RV 3500-4	7 mm
RV 3900-4	7 mm
RV 5500-2	7 mm
RV 6550-4	7 mm

3” Control valve	
Type	**“L”**
All types	3 mm

3” Control/Lock valve	
Type	**“L”**
All types	3 mm

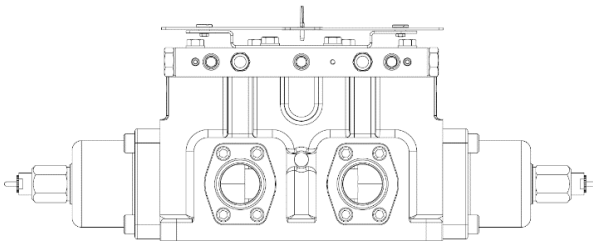

Control valve

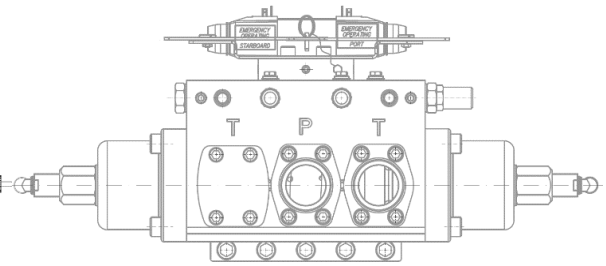

Control/Lock valve

NEUVER MARITIME PROPRIETARY. This document and its accompanying elements contain NEUVER MARITIME information which is proprietary and confidential. Any disclosure, copying, distribution or use is prohibited if not otherwise explicitly agreed with NEUVER MARITIME in writing. Any authorized reproduction, in whole or in part, must include this legend. ©2026 NEUVER MARITIME - All rights reserved.

12. Troubleshoot Hydraulic Lock Alarm (Only AS02)

The alarm Hydraulic Lock is made by four signals, two from the steering control system and two from the Steering Gear control valves. All signals are connected in the pump motor controller, at unit U2, input 17, 18, 19 and 20.

Input 17 and 18 is from the steering system opto-couplers, and 19 and 20 from the pump control valve proximity switch. Additionally, the limit switches will disconnect input 17 & 18 at end position via aux. relays (early version) or a relay module (later version).

Operate the steering from bridge and check the following signals:

No rudder command	Port rudder command	STBD rudder command
Led 17 – OFF Led 18 – OFF Led 19 – ON Led 20 – ON	Led 17 – ON Led 18 – OFF Led 19 – OFF Led 20 – ON	Led 17 – OFF Led 18 – ON Led 19 – ON Led 20 – OFF

Input is active when corresponding led is ON. Any other condition will activate hydraulic lock alarm after a 5 second delay.

If input 17 or 18 are missing, aux. relays/relay module should be checked, as well as the rudder command signal from the optocouplers located on the pump control card.

If signals 19 of 20 are irregular, the proximity switches should be checked. These are located in the control valve's end housings. Follow chapter 11.26 Replacement of Proximity Switch.

If all above checks are found correct, and input 19/20 are still irregular, the proximity switch itself may be the cause. The proximity switch should therefore be replaced as a complete unit.

The order part number of the proximity switch is: **44771**

NEUVER MARITIME PROPRIETARY. This document and its accompanying elements contain NEUVER MARITIME information which is proprietary and confidential. Any disclosure, copying, distribution or use is prohibited if not otherwise explicitly agreed with NEUVER MARITIME in writing. Any authorized reproduction, in whole or in part, must include this legend. ©2026 NEUVER MARITIME - All rights reserved.

13. Spare parts

NOTE!

Information regarding the Steering Gear type and installation number is found on a nameplate mounted on the Steering Gear housing and on the Power Pack unit, nameplate for each pump.

Information regarding the Steering Gear electrical system is found on a sticker on the inside of all the electrical cabinets.

NEUVER MARITIME recommend keeping the below listed spare parts on board as a minimum of on-board spare parts, for additional tailored recommendations please contact support@neuver.com.

When ordering spare parts, please make sure to include the following information to the spares department. Please see chapter 14 Contact for contact information.

Vessel name:		**Shipping address:**	
Owner name:		**Invoicing address:**	
IMO number:		**Drawing number:**	
Steering Gear type:		Position number	
Installation:		Article number	
		Quantity	

NEUVER MARITIME PROPRIETARY. This document and its accompanying elements contain NEUVER MARITIME information which is proprietary and confidential. Any disclosure, copying, distribution or use is prohibited if not otherwise explicitly agreed with NEUVER MARITIME in writing. Any authorized reproduction, in whole or in part, must include this legend. ©2026 NEUVER MARITIME - All rights reserved.

13.1. Critical spare parts

Steering Gear / Power Pack	
1 pcs	Coupling
1 pcs	Electric motor
1 pcs	Pump insert
1 pcs	Control valve
2 pcs	Solenoid valve
1 pcs	Actuator Safety Valve
Feedback Box	
2 pcs	Limit switches
1 pcs	Potentiometer (if fitted)
Motor Controller	
1 pcs	Solenoid driver
1 pcs	Transformer T3
1 pcs	Transformer T1
1 pcs	Fuses (SP kit)
2 pcs	Main contactor K1
1 pcs	Star/Delta contactor K3 (if fitted)
1 pcs	Main switch S1
1 pcs	Selector switch S2
1 pcs	Relay K10
1 pcs	Relay K11
1 pcs	Relay K12
1 pcs	Relay module (K13-k16)
1 pcs	Power supply 24VDC (or complete rectifier circuit)
Control System	
1 pcs	Pump control card
Control Module	
1 pcs	Complete kit for override module
1 pcs	Complete kit for start/stop module

NOTE!

Rubber seals have a recommended shelf-life of no more than five years ,and will not be covered by the Neuver Maritime guarantee if used after this.

NEUVER MARITIME PROPRIETARY. This document and its accompanying elements contain NEUVER MARITIME information which is proprietary and confidential. Any disclosure, copying, distribution or use is prohibited if not otherwise explicitly agreed with NEUVER MARITIME in writing. Any authorized reproduction, in whole or in part, must include this legend. ©2026 NEUVER MARITIME - All rights reserved.

13.2. Recommended spare parts

Steering Gear / Power Pack	
2 pcs	Seal kit for filter
1 pcs	Seal kit for control valve
1 pcs	Seal kit for lock valve
1 pcs	Gland seal kit
1 pcs	Cover seal
2 pcs	Filter element
2 pcs	Flexi coupling
1 pcs	Filter indicator
2 pcs	Proximity switch
Feedback Box	
2 pcs	Limit switches
1 pcs	Potentiometer (if fitted)
1 pcs	Cable hose with plug and nut
2 pcs	Switch arm for limit switch
Motor Controller	
1 pcs	Fuses (SP kit)
1 pcs	Relay module
1 pcs	Relay K10
1 pcs	Phase failure relay
1 pcs	Main contactor K1
1 pcs	Solenoid driver U1
1 pcs	Source on light H2
1 pcs	Heating light H3 (if fitted)
Control System	
1 pcs	Pump control card
Control Module	
1 pcs	Bulb kit (included in SP kit)

NOTE!

Rubber seals have a recommended shelf-life of no more than five years ,and will not be covered by the Neuver Maritime guarantee if used after this.

NEUVER MARITIME PROPRIETARY. This document and its accompanying elements contain NEUVER MARITIME information which is proprietary and confidential. Any disclosure, copying, distribution or use is prohibited if not otherwise explicitly agreed with NEUVER MARITIME in writing. Any authorized reproduction, in whole or in part, must include this legend. ©2026 NEUVER MARITIME - All rights reserved.

13.3. Spare Part Kits and Items

For spare parts needed for the recommended overhaul in relation to scheduled class surveys or docking every fifth year, please contact support@neuver.com .

Please see below table for specified spare part kits and relevant maintenance items.

Steering Gear Overhaul kits

The Steering Gear overhaul kits contains the necessary parts needed to perform the recommended overhaul activities and replacements on the Steering Gear system.

Actuator	5 YEAR	10 YEAR	15 YEAR	20 YEAR	25 YEAR
RV 850-4	RRM000406789	RRM000454007	RRM000406789	RRM000454007	RRM000406789
RV 1050-4	RRM000406802	RRM000454008	RRM000406802	RRM000454008	RRM000406802
RV 1450-4	RRM000406803	RRM000454009	RRM000406803	RRM000454009	RRM000406803
RV 1850-4	RRM000440581	RRM000454010	RRM000440581	RRM000454010	RRM000440581
RV 2300-4 RV 2600-4	RRM000449435	RRM000449434	RRM000449435	RRM000449434	RRM000449435
RV 3500-4 RV 3900-4	RRM000456636	RRM000456637	RRM000456636	RRM000456637	RRM000456636

Seal kits for valves

Valve	Item No
2” Lock valve	RRM000389723
3” Lock valve	RRM000389724
2” Control valve	RRM000389720
2” Combi valve	RRM000389721

Overhaul kits for valves

Valve	Item No
2” Lock valve	000113597
3” Lock valve	000113599
2” Control valve	000113601
2” Combi valve	000113585

One kit needed for each valve.

NEUVER MARITIME PROPRIETARY. This document and its accompanying elements contain NEUVER MARITIME information which is proprietary and confidential. Any disclosure, copying, distribution or use is prohibited if not otherwise explicitly agreed with NEUVER MARITIME in writing. Any authorized reproduction, in whole or in part, must include this legend. ©2026 NEUVER MARITIME - All rights reserved.

Actuator Safety Valve kit

	Item No
Actuator Safety Valve	1 23317

Note: Opening pressure (bar) is stamped on the installed Actuator Safety Valve. The correct project specific Actuator Safety Valve and pressure shall be accordingly.

General service items for Power Pack

	Item No
Filter indicator (manual)	70116_FR
Filter indicator (electrical)	70117_FR
Haenni Gauge	HANNI 439 (Window 70245_FR)

Electrical Bridge Components kit

	Item No
Fuses and light bulb (690VAC power supply)	SP-35014
Fuses and light bulb (251-450VAC power supply)	RRM000374930

NEUVER MARITIME PROPRIETARY. This document and its accompanying elements contain NEUVER MARITIME information which is proprietary and confidential. Any disclosure, copying, distribution or use is prohibited if not otherwise explicitly agreed with NEUVER MARITIME in writing. Any authorized reproduction, in whole or in part, must include this legend. ©2026 NEUVER MARITIME - All rights reserved.

13.4. Pump Spare Parts

Please see below table for pump overhaul spare part kits and illustration of where to find the different parts on the Denison pump cartridge. One kit needed for each pump.

Actuator type	Pump spare part kit
RV 850-4	000117082
RV 1050-4	000117083
RV 1450-4	000117084
RV 1850-4	000117085
RV 2300-4 RV 2600-4	000117086
RV 3500-4 RV 3900-4	000117087

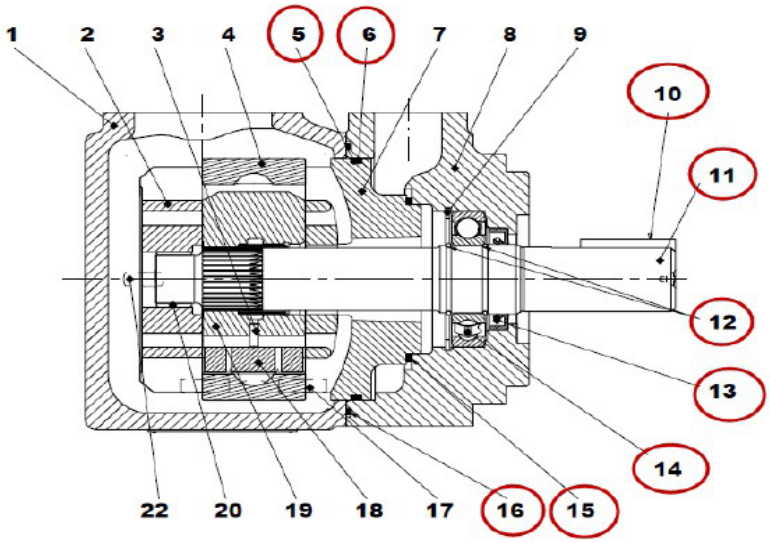

Kit contains:

Pos.	Name	Qty.
5	Back-up ring	1
6	Seal	1
10	Key	1
11	Shaft	1
12	Lock ring	2
13	Shaft seal	1
14	Ball bearing	1
15	Seal	1
16	Seal	1

NEUVER MARITIME PROPRIETARY. This document and its accompanying elements contain NEUVER MARITIME information which is proprietary and confidential. Any disclosure, copying, distribution or use is prohibited if not otherwise explicitly agreed with NEUVER MARITIME in writing. Any authorized reproduction, in whole or in part, must include this legend. ©2026 NEUVER MARITIME - All rights reserved.

14. Contact

Contact information:

NEUVER MARITIME AS
Aarsundvegen 24
6270 Brattvåg
N-6270 Brattvaag

All inquiries:
Phone: +47 48 28 85 00
E-mail: support@neuver.com

Home page:
www.neuver.com

NEUVER MARITIME PROPRIETARY. This document and its accompanying elements contain NEUVER MARITIME information which is proprietary and confidential. Any disclosure, copying, distribution or use is prohibited if not otherwise explicitly agreed with NEUVER MARITIME in writing. Any authorized reproduction, in whole or in part, must include this legend. ©2026 NEUVER MARITIME - All rights reserved.