CM840 LUNA

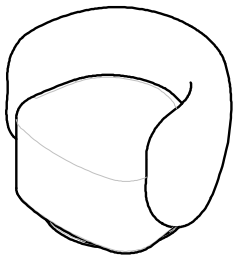
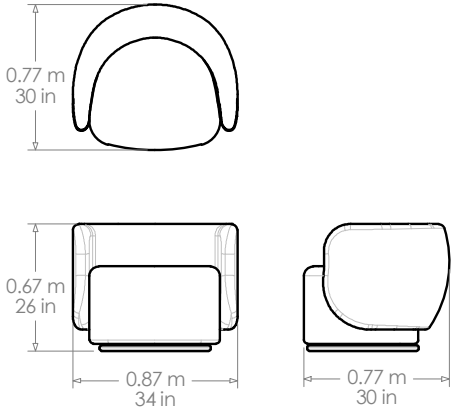
SW SWIVEL CHAIR
SILLON GIRATORIO