Rental equipment

GMC Lifting Solutions

6 Ton air powered chainhoist

Manufacturer	Toku - Yokota Red Rooster
Model	TMH-6000
WLL	6000 kg @ 2 fall chain
Min. hook distance	537 mm
Lifting speed	2,7 m/min
Lowering speed	5,4 m/min
Work pressure	6,2 bar
Max air consumption	3500 l/min @ 6,2 bar
Weight with 3 m HOL	124 kg
Weight extra chain	7,6 kg per meter
Comes with	Overload, limit switches, e-stop
Lifting height	50 meter
Remote control	2 meter pendant with E-stop + 10 meter ropes



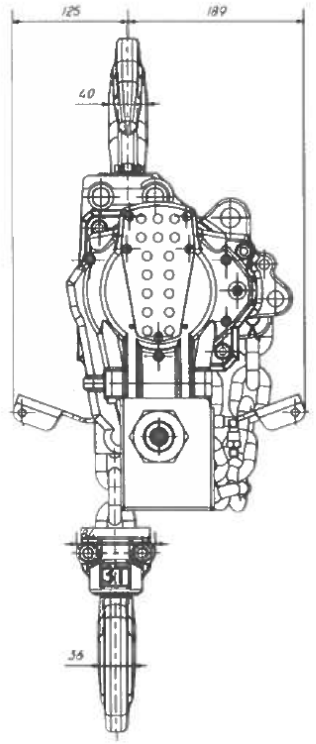

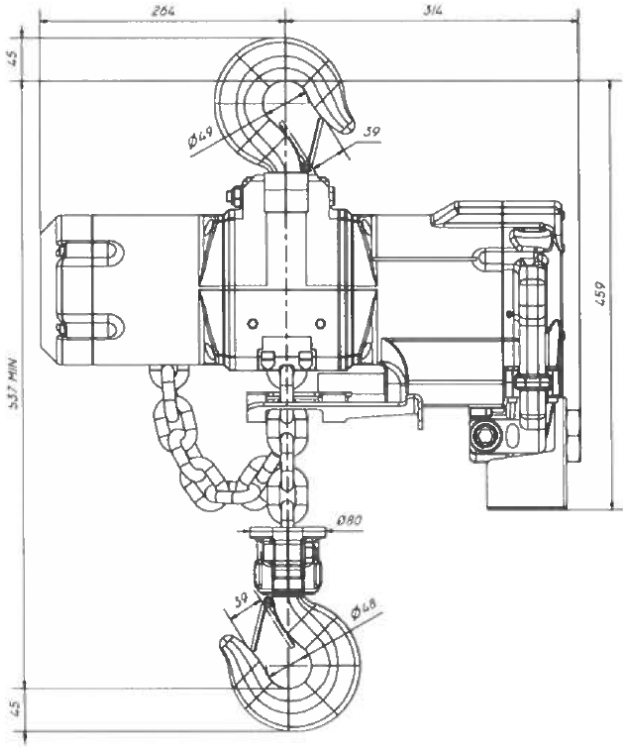

STANDARD FEATURES

CE marked with test certificate and users manual
ATEX zone 2 specification
Failsafe automatic internal disc brake
Mechanical upper & lower switches
Internal silencing down to 83 dB(A)
Alloy safety swivel hooks with safety catch
Load chain 13 x 36mm according to EN818-7