Rental equipment

GMC Lifting Solutions

Kito ultralow headroom trolley-hoist model SHB-020

WLL: 2000 kg

Headroom from bottom wheels to hook: C = 145 mm

Adjustable for beam width: 80 - 200 mm

Lifting chain: 3.0 meter

Hand chain: 2.0 meter

Chain falls: 2

Weight with 3 m lifting chain: 90 kg

Swivel load hook with ball bearing, opening 36 mm.

Hoist with slipping-clutch overload system

Comes with CE marking, lifting certificate and user instructions



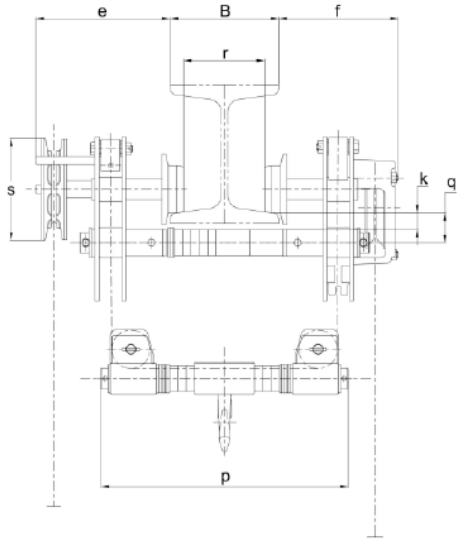

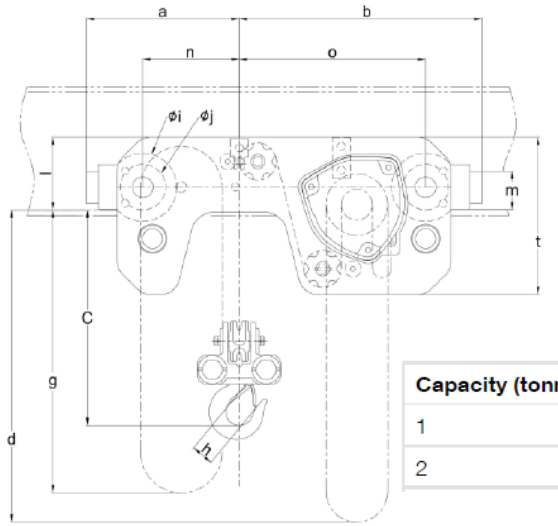

Capacity (tonne)	Model	a	b	d	e	f	g	h	i	j	k	l	m	n	o	p	q	r	s	t
1	SHB010	237	377	5791	201	180	5791	29	106	71	25	114	61	150	290	368	46	B-41	153	244
2	SHB020	281	436	5791	227	194	5791	36	127	85	31	168	68	180	335	418	53	B-51	153	290