Rental equipment

GMC Lifting Solutions

Manual barge winches (15 pieces)

Pulling force with handwheel: 5 Ton (7.5 Ton)

Pulling force with ratchet lever: 15 Ton

Holding force: 50 Ton

Dimensions (L x B x H): 120 x 82 x 110 cm

(120 cm x 80 cm x 12mm , bottom plate)

Weight: 400 kg

Wire capacity: 28 mm x 50 m w/ socket or hard eye

Gearing: 15:1 (15 turns on handwheels = 1 meter wire)

Manufacturer: Ingersoll Rand - Beebe International Inc.

Hand operated manual winch are extremely useful for mooring operations on barges, vessels, etc.
Right and Left hand model determined by which side the hand-wheel is mounted.

The barge winch is a pulling machine and can come with technical report confirming the pulling and brake capacity.
Wire comes with certificate.



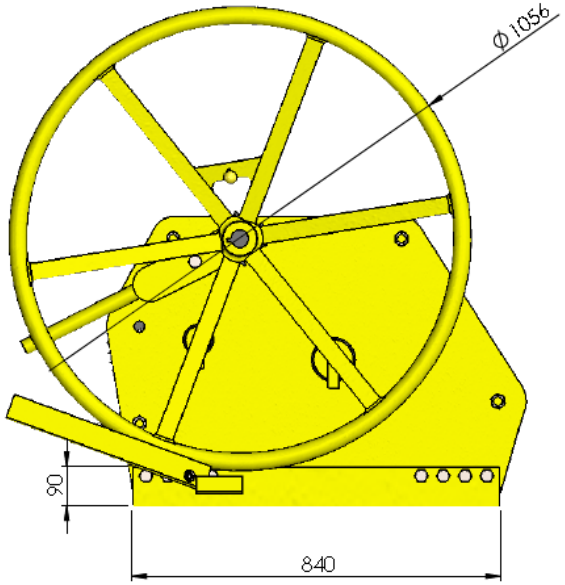

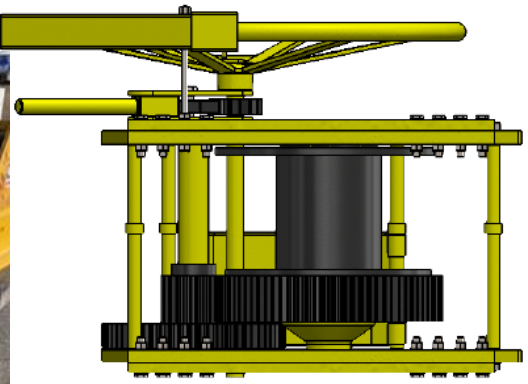

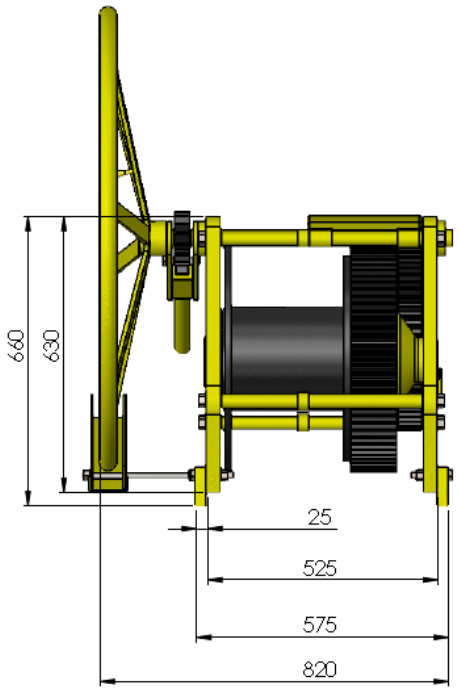

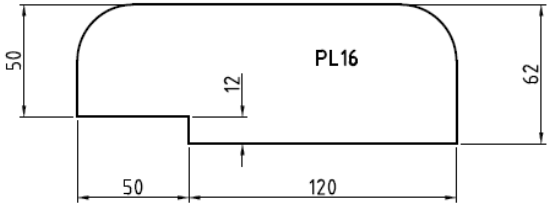

Use 10 x backets (see drawing) for seafastening to deck, no welding on winches