GMC Lifting Solutions

Adjustable spreader beam WLL 170 Ton (30 degree top sling)

Span from 2 meter up to 15.5 meter

c/c padeyes from 2 meter to 24 meter (0.5 m steps)

2 x top padeyes for 125 T Widebody shackles

2 x bottom padeyes for 85 T shackles

Comes with certificate and user instructions.

DNV type approval certificate available on request

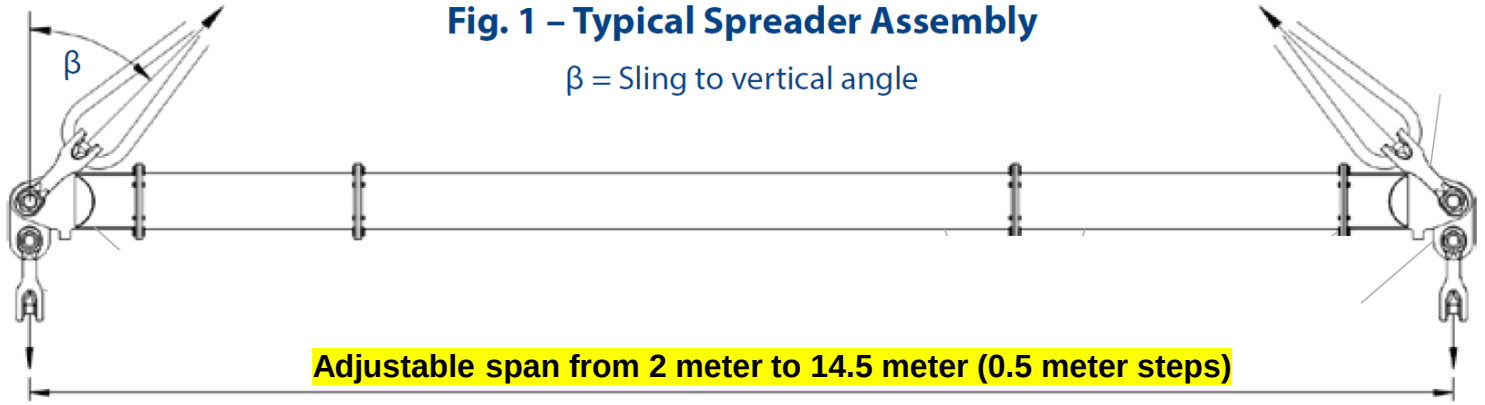

Fig. 1 – Typical Spreader Assembly

β = Sling to vertical angle

20mm x 90mm grade 10.9 HT galvanized bolts, nuts & washers
Bolt torque: 180 NM – 32 mm spanner

Slings and shackles can be supplied with spreader beam.



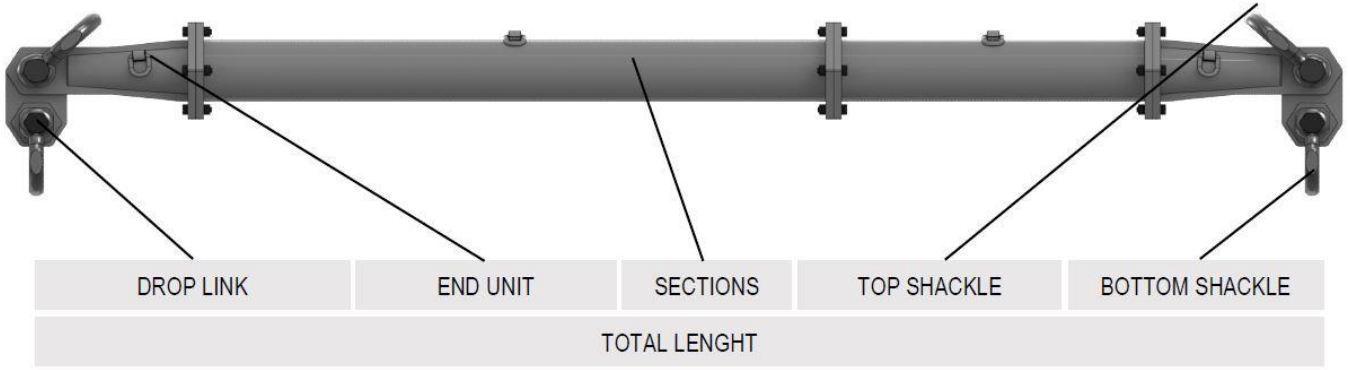

Rental equipment

GMC Lifting Solutions

Description	Weight per Item
2 x 1.0m End units WLL 170t	305 kg
2 x Drop links WLL 170t	945 kg
1 x 0.5 m section	161 kg
1 x 1.0 m section	210 kg
1 x 2.0 m section	308 kg
1 x 4.0 m section	503 kg
1 x 6.0 m section	700 kg
2 x 125 Ton Wide Body Top shackles	84 kg
2 x 85 Ton Bottom shackles	62 kg
18 x M20 x 90mm, grade 10.9 bolts, nuts & washers	

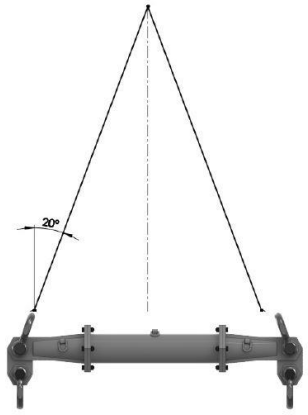

20° with the vertical

Sling length = Assembly length x 1,462

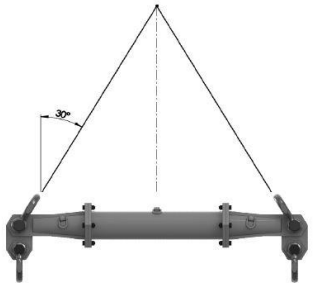

30° with the vertical

Sling length = Assembly length

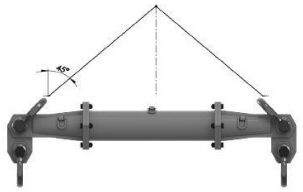

45° with the vertical

Sling length = Assembly length x 0,707

TABLE LOAD VS SPAN OX SB 170 V2 Rev.01 22/03/18

Span (m)	Sling to vertical Angle						Recommended configuration. EU = End unit					
	Θ = 45°		Θ = 30°		Θ = 20°							
	WLL (t)	Min. Top sling length (m)	WLL (t)	Min. Top sling length (m)	WLL (t)	Min. Top sling length (m)						
2	170	1,4	170	2,0	170	2,9	EU	EU				
3	170	2,1	170	3,0	170	4,4	EU	1	EU			
4	170	2,8	170	4,0	170	5,8	EU	2	EU			
5	170	3,6	170	5,0	170	7,3	EU	3	EU			
6	170	4,3	170	6,0	170	8,8	EU	4	EU			
7	170	5,0	170	7,0	170	10,2	EU	5	EU			
8	170	5,7	170	8,0	170	11,7	EU	6	EU			
9	170	6,4	170	9,0	170	13,2	EU	6	1	EU		
10	170	7,1	170	10,0	170	14,6	EU	6	2	EU		
11	170	7,8	170	11,0	170	16,1	EU	6	3	EU		
12	162	8,5	170	12,0	170	17,5	EU	6	4	EU		
13	144	9,2	170	13,0	170	19,0	EU	6	5	EU		
14	128	9,9	170	14,0	170	20,5	EU	6	6	EU		
15	112	10,7	170	15,0	170	21,9	EU	6	6	1	EU	
16	100	11,4	170	16,0	170	23,4	EU	6	6	2	EU	
17	88	12,1	152	17,0	170	24,9	EU	6	6	3	EU	
18	78	12,8	134	18,0	170	26,3	EU	6	6	4	EU	
19	70	13,5	120	19,0	170	27,8	EU	6	6	5	EU	
20	62	14,2	107	20,0	170	29,2	EU	6	6	6	EU	
21	55	14,9	95	21,0	150	30,7	EU	6	6	6	1	EU
22	49	15,6	84	22,0	140	32,2	EU	6	6	6	2	EU
23	44	16,3	75	23,0	120	33,6	EU	6	6	6	3	EU
24	40	17,0	68	24,0	108	35,1	EU	6	6	6	4	EU