GMC Lifting Solutions

Adjustable spreader beam WLL 50 Ton (30 degree top sling)

Span from 1 meter up to 12.5 meter

c/c padeyes from 1 meter to 12.5 meter (0.5 m steps)

2 x top padeyes for 35 T shackles

2 x bottom padeyes for 25 T shackles

Comes with certificate and user instructions.

DNV type approval certificate available on request

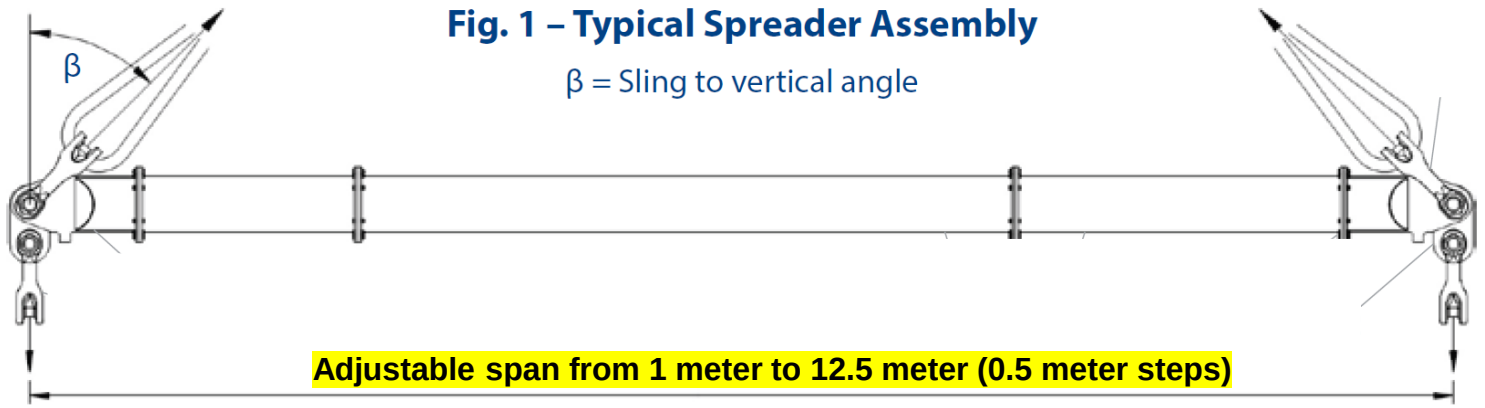

Fig. 1 – Typical Spreader Assembly

β = Sling to vertical angle

20mm x 90mm grade 10.9 HT galvanized bolts, nuts & washers
Bolt torque: 180 NM – 32 mm spanner

Slings and shackles can be supplied with spreader beam.



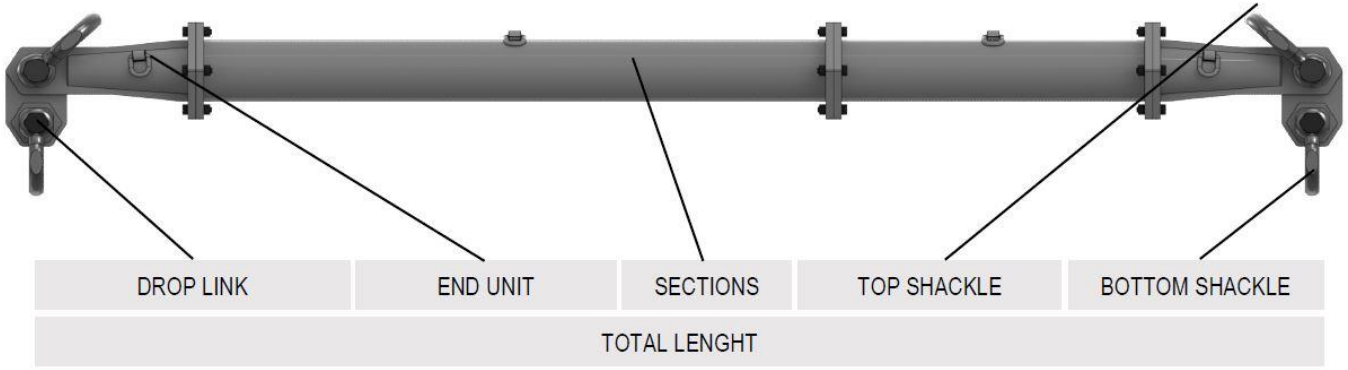

Rental equipment

GMC Lifting Solutions

Description	Weight per Item
2 x End units WLL 50t	59 kg
2 x Drop links WLL 50t	17 kg
1 x 0.5 m section	? kg
1 x 1.0 m section	72 kg
1 x 2.0 m section	105 kg
2 x 35 Ton Wide Body Top shackles	20 kg
2 x 25 Ton Bottom shackles	15 kg
18 x M20 x 90mm, grade 10.9 bolts, nuts & washers	

TABLE LENGTHS AND LOADS

Depending on the total length and the angle of the slings, the capacity of the spreader may vary. It is very important to respect the information of this table in order to keep the security.

Total length (m)	1	2	3	4	5	6	7	8	9	10	11	12	13	14	15	16
Load at 20° (t)	50	50	50	50	50	50	50	50	50	50	50	46	35	27	25	22
Sling length 20° (m)	1,5	2,9	4,4	5,8	7,3	8,8	10,2	11,7	13,2	14,6	16,1	17,5	19	20,5	21,9	23,4
Load at 30° (t)	50	50	50	50	50	50	50	50	50	46	38	29	22	17	15	14
Sling length 30° (m)	1	2	3	4	5	6	7	8	9	10	11	12	13	14	15	16
Load at 45° (t)	50	50	50	50	50	50	50	41	33	27	22	17	13	10	9	8
Sling length 45° (m)	0,7	1,4	2,1	2,8	3,6	4,3	5	5,7	6,4	7,1	7,8	8,5	9,2	9,9	10,7	11,4

Recommended configuration: T (End unit + Drop link) + Section + T

	T	T	T	T	T	T	T	T	T	T	T	T	T	T	T	T
	T	1	2	3	4	5	6	6	6	6	1	1	1	1	2	3
		T	T	T	T	T	T	1	2	3	6	6	6	6	6	6
								T	T	T	3	4	5	6	6	6
											T	T	T	T	T	T

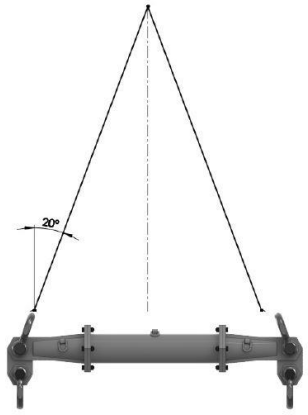

20° with the vertical

Sling length = Assembly length x 1,462

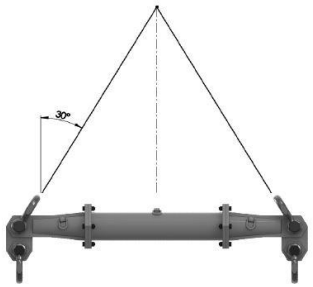

30° with the vertical

Sling length = Assembly length

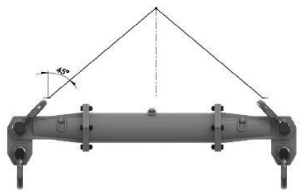

45° with the vertical

Sling length = Assembly length x 0,707