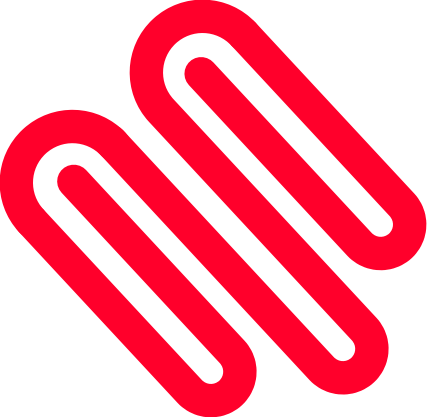

ZIJTVELD

Introduction

ZIJTVELD

Index

ZIJTVELD

EU declaration of compliance

ZIJTVELD

Safety regulations

ZIJTVELD

Warning

ZIJTVELD

Terms of guarantee

ZIJTVELD

Procedures to follow before initial use

ZIJTVELD

Daily Maintenance

ZIJTVELD

Lubrication Schedule

ZIJTVELD

Exploded view B804-ZD

ZIJTVELD

Parts list B804-ZD

ZIJTVELD

Parts list cylinder left B804-ZD

ZIJTVELD

Parts list cylinder right B804-ZD

ZIJTVELD

Torques specification

ZIJTVELD

Technical specifications: B804-ZD

ZIJTVELD

Dear User,

The Tree grab is a piece of equipment for excavators. The Tree grab is available in various weights, capacities and versions and is always a fast and purpose-built selector and demolition device.

Content

Page

(Guideline 2006/42/EC)

The Selector Grab should always be attached to an excavator of the correct weight, class and capacity of machine. Refer to the data information plate on the grab and consult the technical specifications in this manual. When in doubt contact the supplier.

The weight of the grab, increased by the weight of the load being picked up, must never exceed the maximum allowance of lifting power. For further information consult the excavator manual.

It is prohibited for people to be within the rotation range of the machine and grab. Keep in mind that material being lifted that extrude from the grab will enlarge the rotation range.

It is always possible that material can fall out of the excavator's grab. For this reason, never rotate the machinery above people, machines nor vehicles.

Always pick up a long load at its centre of gravity, to prevent the excavator from either rotating or tipping over. It is not permissible to use the grab to hit or pound.

Whilst connecting or disconnecting, lubricating or other maintenance work, the grab must be stable and on a flat surface. Before performing lubricating or other maintenance work the engine should always be shut down.

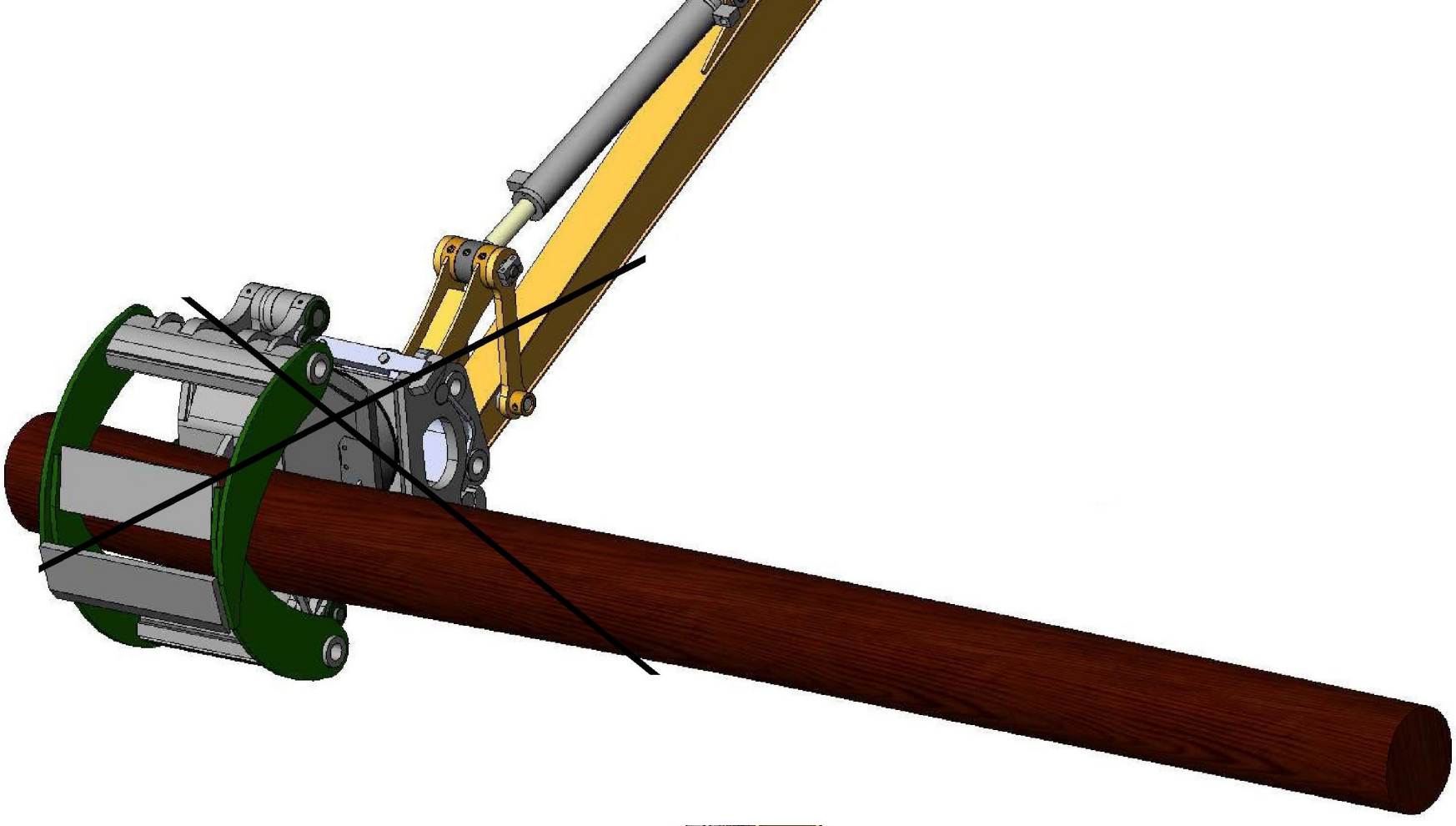

The manufacturer provides a warranty of 12 months from the date of delivery.
All defective parts proven to be caused by faults in either manufacture, production or material are covered by the warranty.

Defective parts that are replaced and fall under guarantee become property of the manufacturer. They must be kept available and returned immediately, in complete and unaltered condition, upon the first request from the manufacturer.

Any claim made under guarantee will only be taken into consideration once a written appeal is made to the dealer or manufacturer. This must be done directly after the damage or fault occurs and at least within 24 hours of any irregularities and problems arising.

All claims under conditions of the warranty must contain the following data; the type of machine the product has been mounted on, the serial number of the grab, the record of the defective part(s) and a description of the fault, photographs, copy of the delivery papers and invoice and a copy of the invoice of the piece of equipment concerned. Minor repairs can be carried out in consultation with the dealer; the necessary parts which fall under the warrantee, will be delivered without charge. For larger repairs the grab should be sent to your dealer or manufacturer for repairs or modifications. The work and necessary parts are free of charge. However, transport costs and call-out charges to and from your dealer or manufacturer are not covered.

The manufacturer is not liable for consequential loss caused by a defective Selector Grab (consequential loss to excavators, consequential loss due to a stationary excavator or the suspending of work activity).

Before taking the machine into operation and to ensure the good functioning of the a-pparatus, it is important that the following points are checked and correspond to the tech-nical specifications as shown on the information plate and in the manual.

For maintenance work, always place the grab in open position on a flat and stable surface and ensure the excavator cannot move.

During maintenance on the hydraulic system the hydraulic hoses need to be disconnected. Before disconnecting ensure there is no pressure on the hoses. Consult the manual for the excavator.

The grab must be lubricated once every 8 operating hours with the same lubricant recommended for the excavator. For the position of the grease nipples and frequency of lubrication, see the schedule on page 10.

Maximum torque specified to bolts on the cutting blades and rotator of the demolition and sorting grab.

Please consult this listing on diameter, pitch and metric size and maximum torque specified prior to fastening.

EU declaration of compliance

04

Manufacturer

Zijtveld Grijpers B.V.

1

2

3

5

6

7

9

10

11

12

13

14

15

16

17

18

19

20

21

22

23

24

25

26

28

51

57

58

1

1

1

1

1

1

2

1

1

2

2

2

2

2

2

2

4

1

1 set

2

2

4

1

1

1 set

1 set

1 set

2

Welded main frame construction

Left shell (short lever / small bucket)

Right shell (long lever / wide bucket)

Welded linkage construction

Hydraulic cylinder

Hydraulic cylinder

Main hinge pin

Linkage axis (top / long)

Linkage axis (bottom / short)

Disk spring

Castellated nut

Split pin

Locking pin

Locker plate linkage axis

Bearing linkage

Bearing shell hinge short

Bearings main frame

Locker U

Grease nipples

Shell hinge short

Shell hinge long

Shell hinge support

Fixed blade left bucket (small)

Fixed blade right bucket (wide)

Hose set lower frame

Grease nipples

Locking set

Plain bearings

S804B.001
S804B.002
S804B.003
S804B.005
S804B.006
S804B.007
S804B.009
S804B.010
S804B.011
S804B.012
S804B.013
S804B.014
S804B.015
S804B.016
S804B.017
S804B.018
S804B.019
S804B.020
S804B.021
S804B.022
S804B.023
S804B.024
S804B.025
S804B.026
S804B.028
S804B.051
S804B.057
S804B.058

101

102

103

104

105

106

107

108

109

110

111

1

1

1

1

2

1

1 set

1

1

1 set

1

Cylinder housing

Piston rod

Cylinder head

Piston

Bearing cylinder housing

Plain bearing cylinder nut

Cylinder seal kit

Secure bolt

Secure bolt

Cylinder nipple set

Bearing cylinder piston

S804B.101

S804B.102

S804B.103

S804B.104

S804B.105

S804B.106

S804B.107

S804B.108

S804B.109

S804B.110

S804B.111

102

103

104

105

106

107

108

109

111

112

1

1

1

2

1

1 set

1

1

1 set

1

Piston rod

Cylinder head

Piston

Bearing cylinder housing

Plain bearing cylinder nut

Cylinder seal kit

Secure bolt

Secure bolt

Cylinder nipple set

Cylinder housing

S804B.102

S804B.103

S804B.104

S804B.105

S804B.106

S804B.107

S804B.108

S804B.109

S804B.111

S804B.112

Safety regulations

05

Address

De Boomgaard 1

The type and weight of the sorting grab must conform to weight and machine class of the intended excavator.

Weight class excavator

12-20

Conditions of guarantee

07

’s Graveland

It is imperative you read this manual and follow all the instructions given when working with our machinery in accordance with our recommendations.

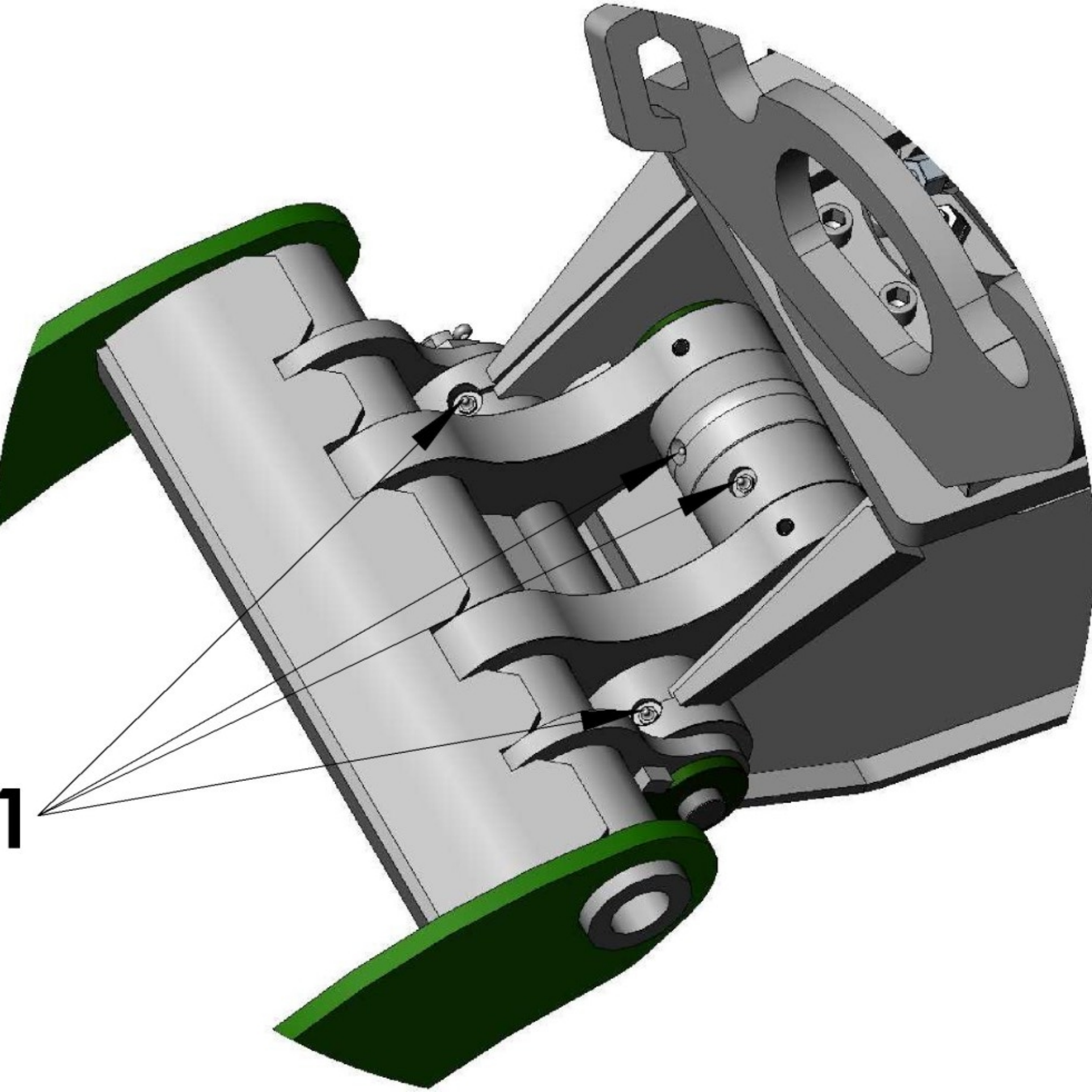
1

The oil flow and the pressure for rotating the selector grab should be checked and adjusted.

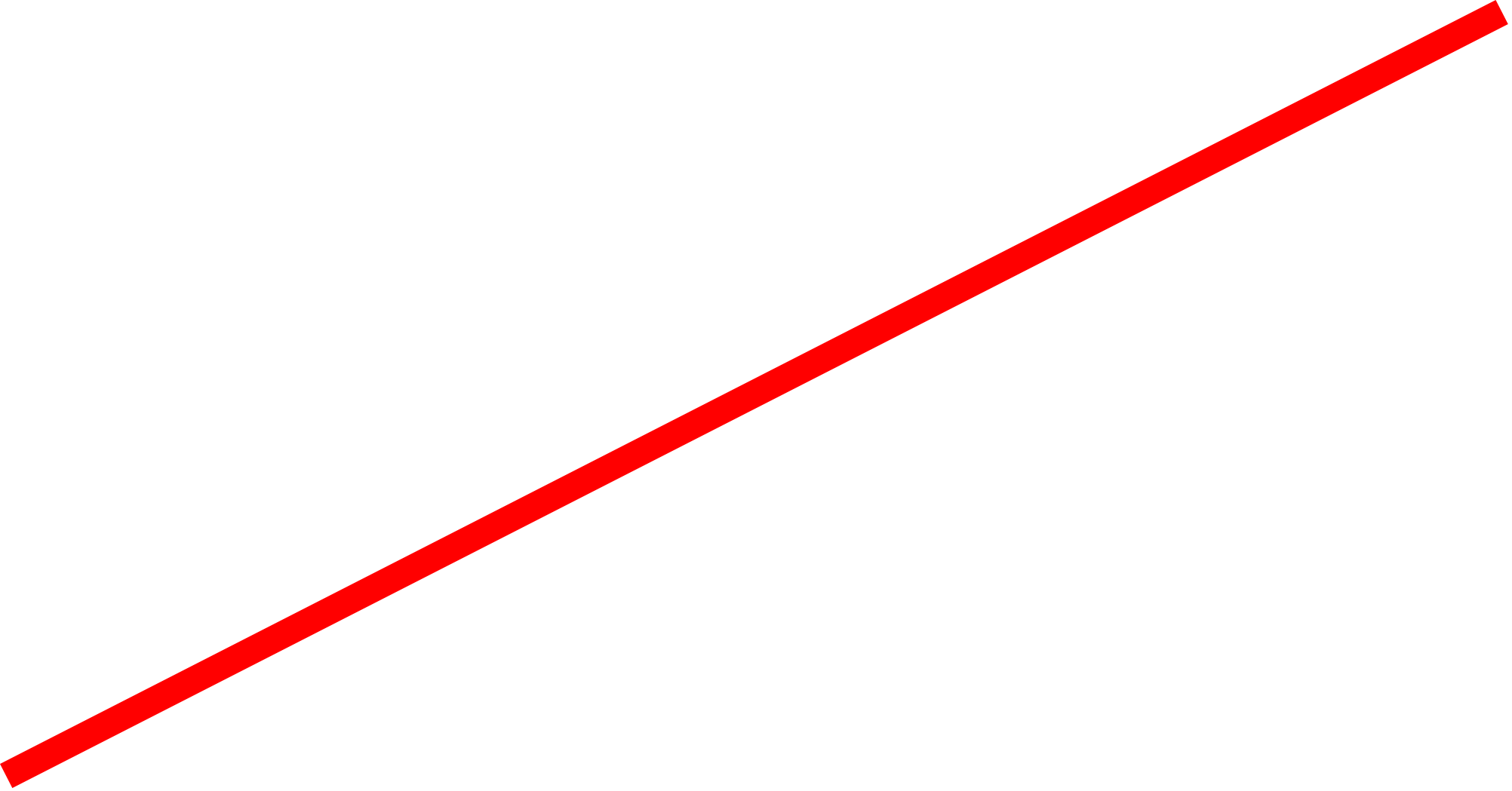

Operation

08

Weight

720

Hereby declares that Zijtveld Grijper®

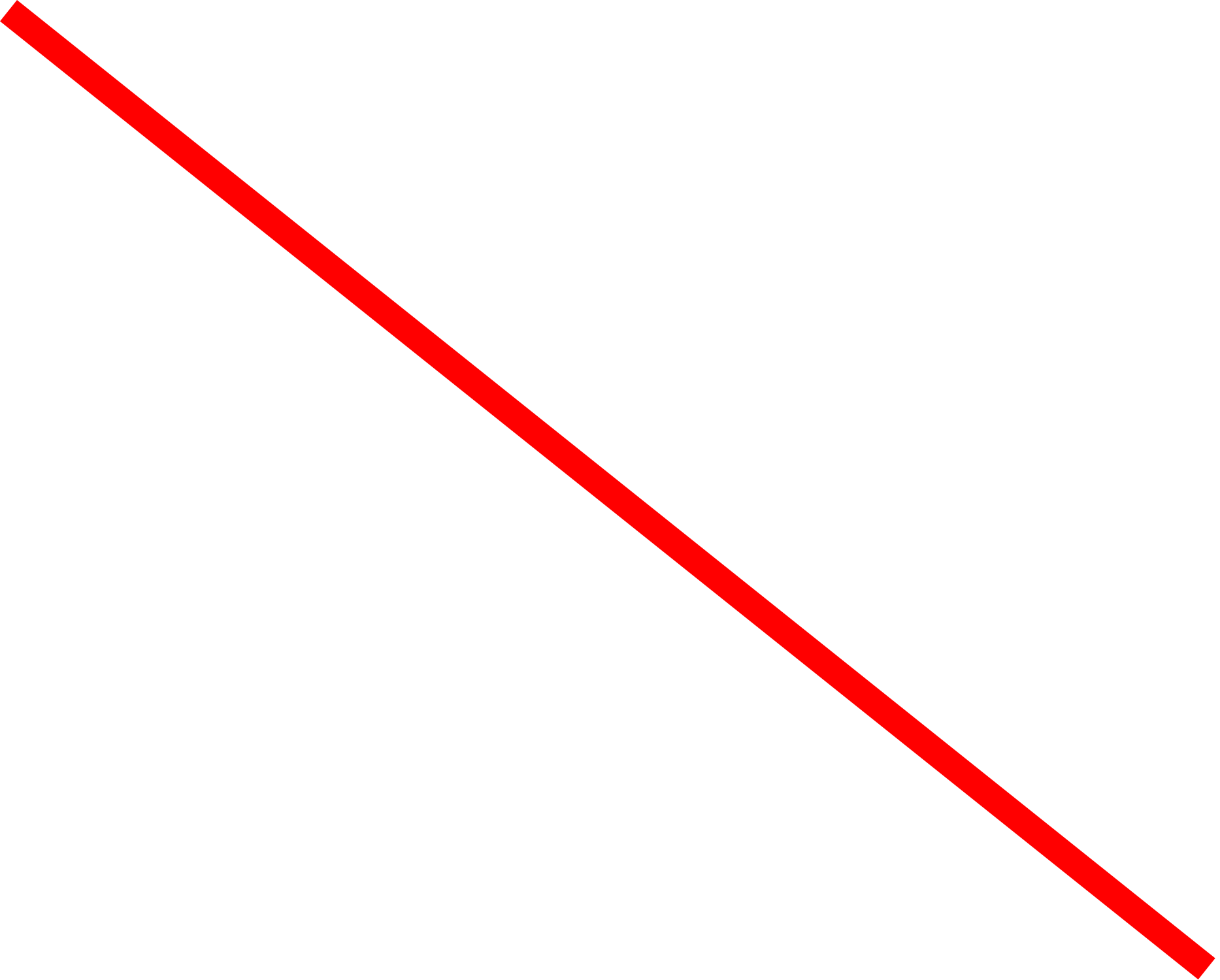

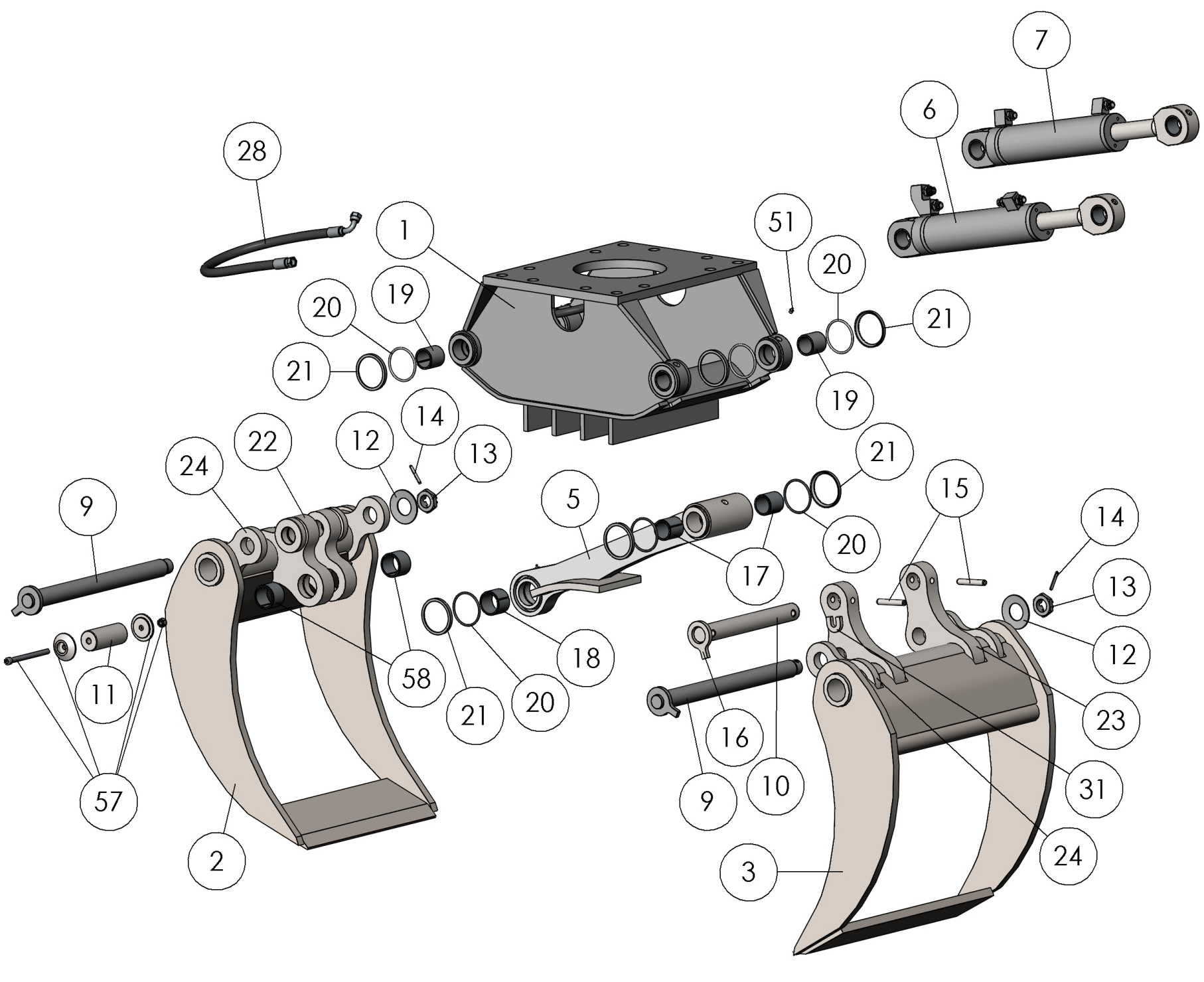
7
6
28
1
51
20
19
20
21
21
19
14
22
12
13
24
21
9
5
15
14
20
17
13
18
12
58
11
21
20
23
16
31
57
9
10
24
2
3

Beware: the return pressure of the rotating oil at a continuous level may be at a max-imum of 25 bar, and only briefly (maximum of 10% of the working time) at 100 bar.

Daily maintenance

09

Operating pressure max.

350

Type

B804-ZD

The Tree grabs are provided with a CE marking, thereby complying with all the necessary European regulatory safety regulations.

It is essential to follow the safety regulations at all times.

These safety regulations refer to those laid out in this manual, including both the operating instructions for excavators and the safety regulations that apply to the vicinity in which the Tree grab product is being used, maintained and repaired.

Modifications made to the Tree Grab may only be implemented with the written consent of the manufacturer. Only under these circumstances do the warranty conditions and CE iabilities remain applicable.

Bout 10,9

40 Nm

80 Nm

130 Nm

110 Nm

200 Nm

300 Nm

600 Nm

1000 Nm

1500 Nm

2000 Nm

3600 Nm

4600 Nm

Bout 10,9

4 Kgm

8 Kgm

13 Kgm

11 Kgm

20 Kgm

30 Kgm

60 Kgm

100 Kgm

150 Kgm

200 Kgm

360 Kgm

460 Kgm

Lubrication schedule

10

The oil flow and pressure of the pinching (opening and closing) of the sorting grab needs to be controlled and adjusted.

Oil flow max.

120

Serial number

M8

Exploded view

11

Picture 3: Lubricating cylinder bearing

M10

Shell width

735

Part list

12

Check if the hydraulic quick release hitch is in good order and screwed on firmly.

1 = Lubricate 1 x per 8 operating hours.

M12

Width opened

2050

Parts list + exploded view Cylinder (left)

13

Check if the ball valves and valves are in the correct position.

meets all the required machine guidelines (Guideline 2006/42/EC, as most recently updated) as well as national legislative implementation of this directive.

Attention: Any adjustment that is made to this product without written consent on the manufacturer, makes this declaration void and invalid.

We should draw your attention to the fact that the selector grab product is designed to be assembled with another machine, and that the product, on the grounds of the machine Guide Line, can only be used once the whole machine is in accordance to the conditions laid down by European regulations.

M12x1,25

Note ,fine pitch.

Height opened

740

Parts list + exploded view Cylinder (right)

14

Check if the connecting pins between the excavator and the sorting grab are well secured, as well as the wedge and the security pin of the quick release hitch system.

M14

M16

Tightening torques

15

Closing force

46

Exploded view cylinder right B804-ZD

Exploded view cylinder left B804-ZD

Ensures that the hoses have the correct length and are at no risk of interfering with any of the moving parts. Also make sure they cannot wear or damage because of contact with the grab or material that is moved by the grab.

M20

Technical specifications

16

M24

M27

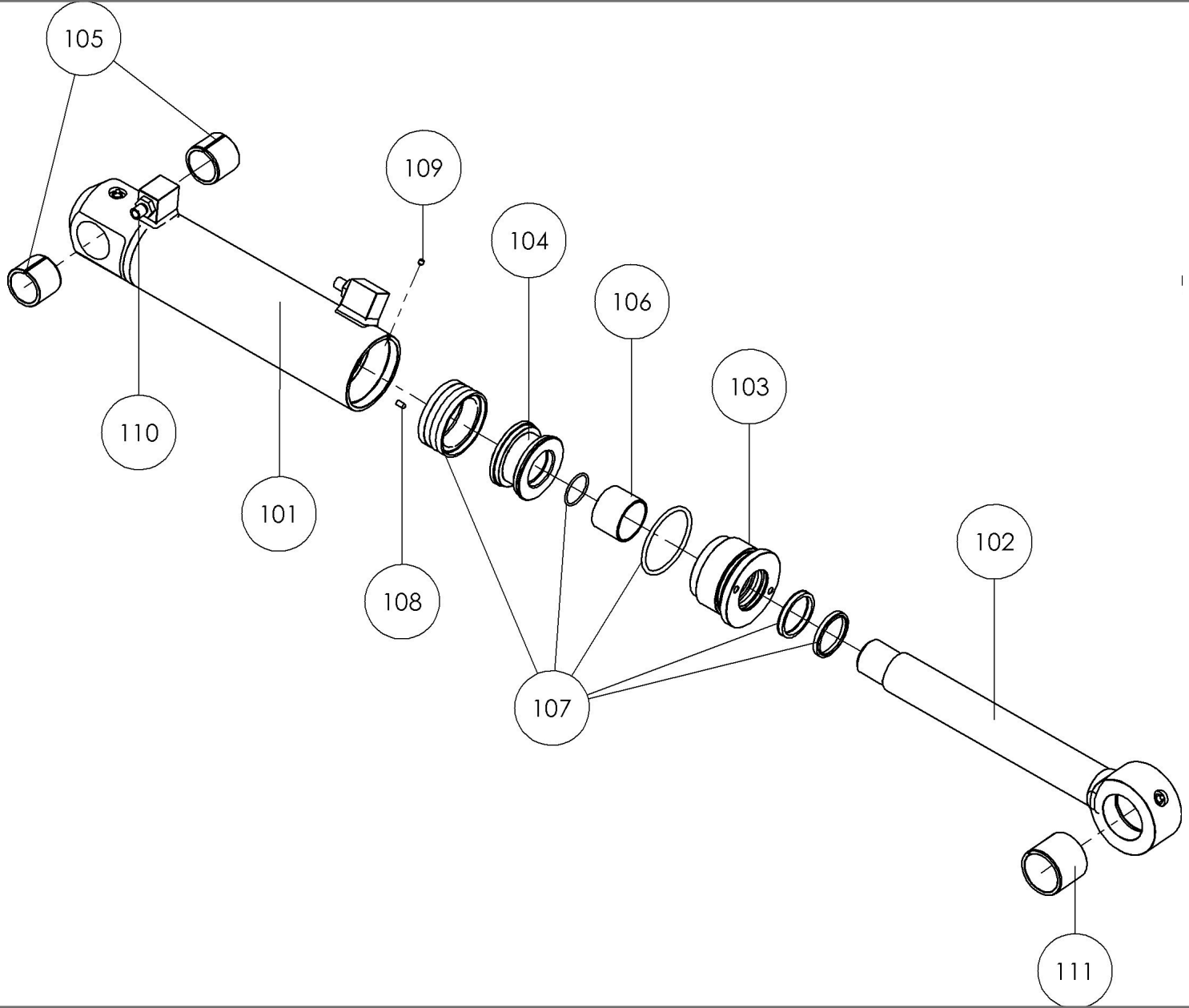
105
109
104
106
103
110
101
108
102
107
111

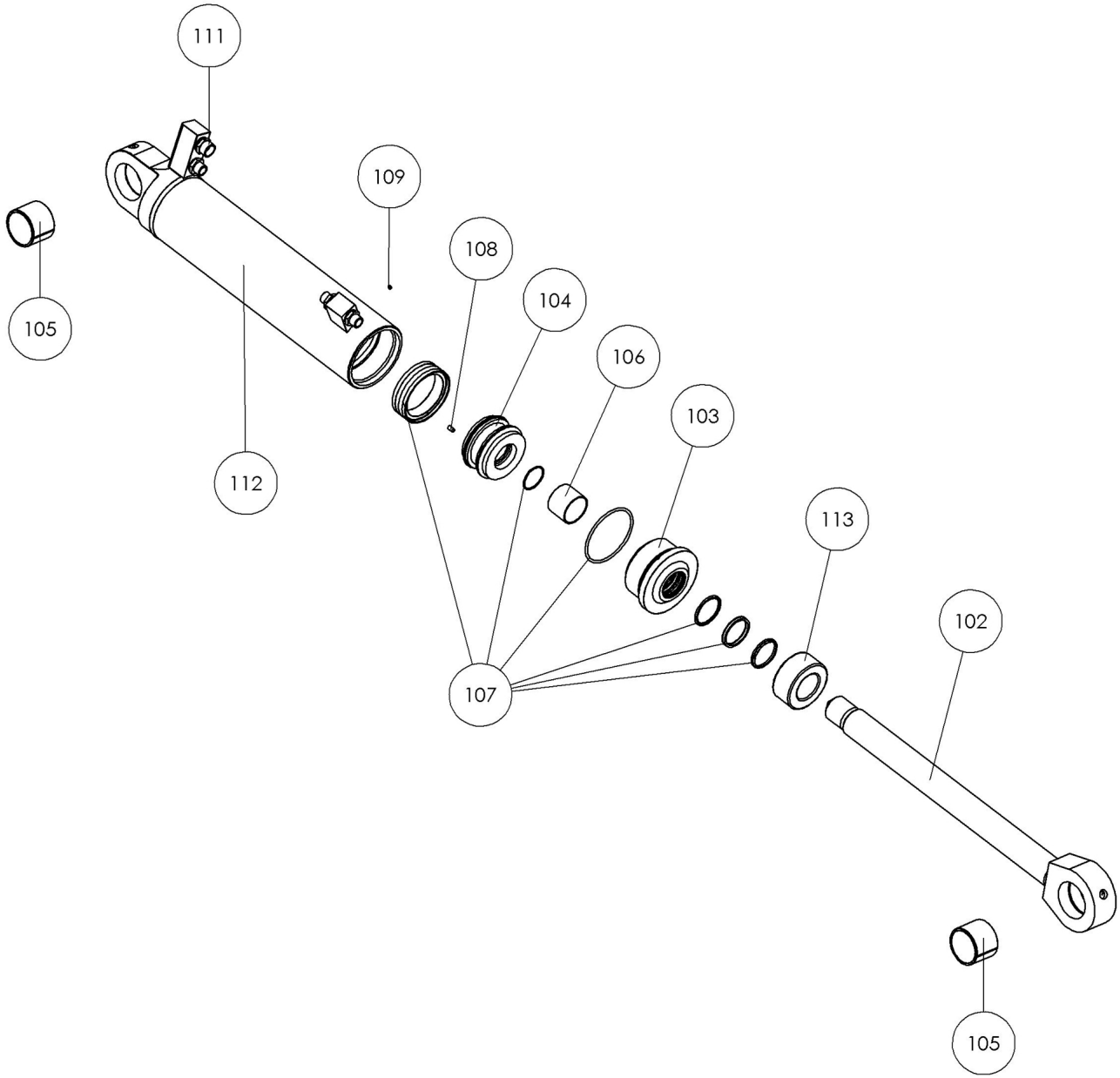
111
109
108
104
106
103
105
112
113
102
107
105

M30

Warning

Warning: To avoid danger lift a long load only in the center of cravity.

M36

Warning

M39

EXCLUDED FROM GUARANTEE:

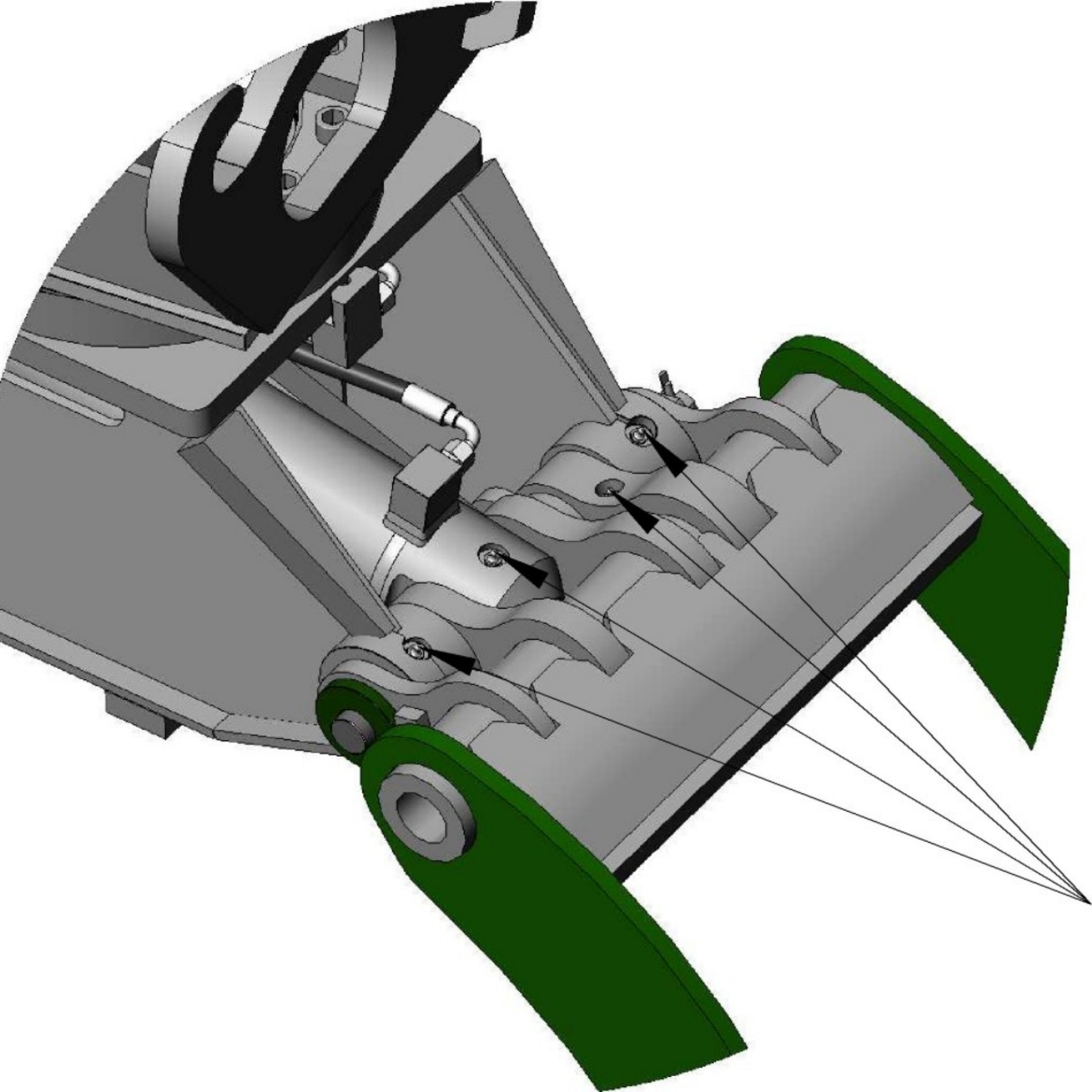

Date

Damage caused by faulty assembly of a machine and or the hydraulic system, improper maintenance without expertise and transport damage.

Never work on the hydraulic system if the system is still under pressure! Keep hands away from moving parts at all times.

The manufacturer cannot anticipate every possible circumstance that might involve a potential hazard. The warnings in this publication are, therefore, not all–inclusive. If a tool, procedure, work method or operating technique that is not specifically recommended by the manufacturer is used, then you must assure yourself that it is safe for you and others.

You should also ensure that the product will not be damaged or made unsafe by the operation, lubrication, maintenance or repair procedures that you choose.

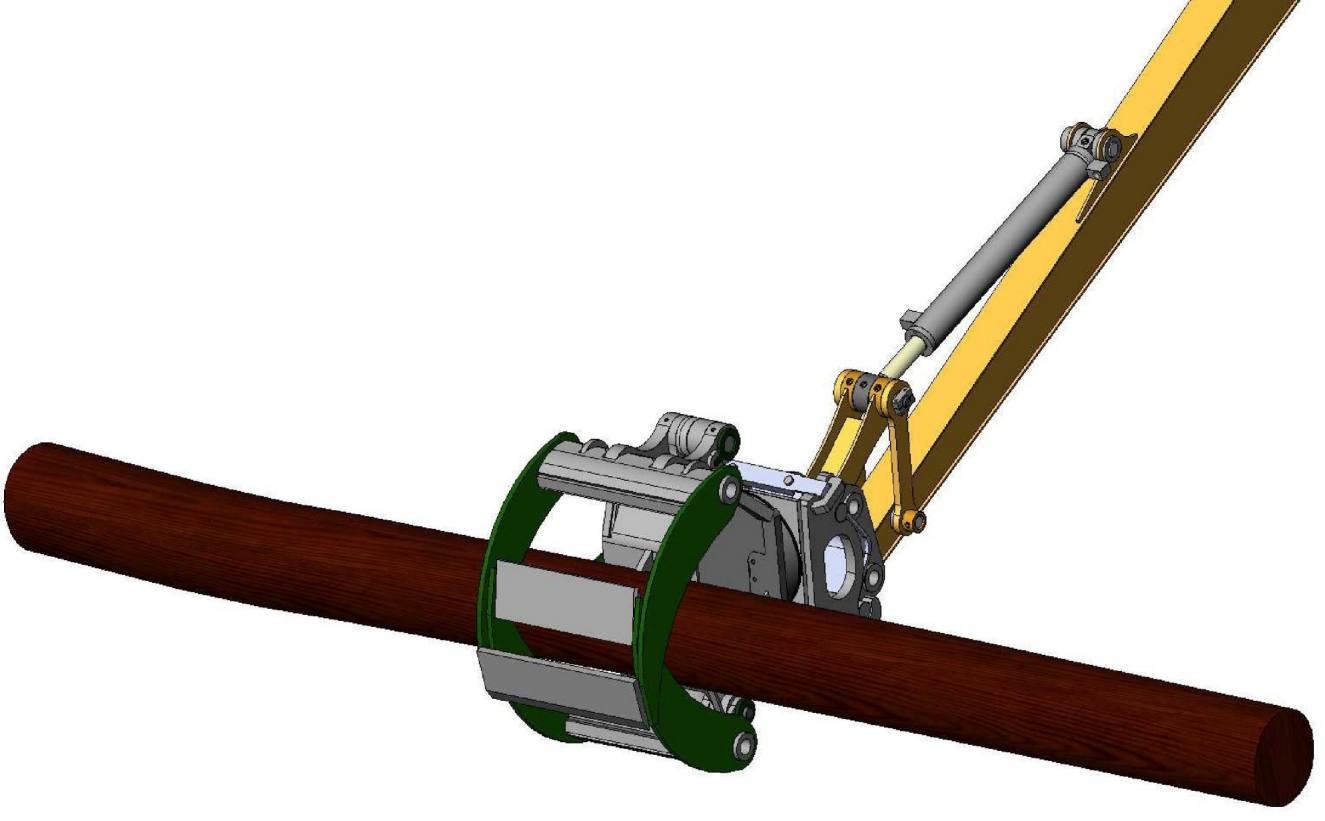

The excavator with a Tree Grab may only be operated by a qualified person.

Defects resulting from improper repairs and/or maintenance including that carried out by an unauthorised third party.

Maintenance and/or repairs may only be carried out by appropriately trained and competent personnel.

Prevent dangerous work situations. Stay at a safe distance from moving parts.

Defects arising from neglect or improper execution of preventive maintenance procedures e.g. regular lubrication or greasing.

Picture 4: Lubricating pivoting points

Ensure that whilst operating the machinery no other people are within the working vicinity of the excavator with tree grab.

1 = Lubricate 1 x per 8 operating hours.

Defects to parts which are subject to normal wear like blades.

Maintenance or repair work must only be carried out when the engine is turned off.

(signed)

Consequential loss caused by failure to replace normal wearing parts in time.

Refer to the safety regulations before starting on any maintenance or repair work.

N.B. If defective or worn down parts are replaced by non-original parts, the entire warranty and liability will cease to apply.

Replace defective parts only with original parts from the manufacturer.

Failure to replace defective parts with original parts from the manufacturer will result in cessation of the entire warranty and CE liability.

® Zijtveld Grijpers is a registered trademark of Zijtveld Grijpers BV in 's-Graveland, the Netherlands. No part of this publication may be reproduced without the express prior permission of Zijtveld Grijpers BV. All rights and modifications reserved.