Speed Queen
The Proven Performer in Laundry

SPEED QUEEN® ON-PREMISES LAUNDRY SOLUTIONS

# Hardmount Washer-Extractors

SA80 | SA105 | SA135

**Features and Benefits**
- Rigid mounted, normal spin, 200G factor
- Stainless steel top and front panel, black side panel
- Stainless steel drum and tSB
- QED Select – fully programmable microprocessor
- Patented soap hopper
- Large drain valve (Ø 76 mm)
- Easy access to all vital parts from the front
- Large door opening for easy loading & unloading

**Options**
- Stainless steel side panels
- USB plug (on the back panel)
- Liquid soap connection
- Steam heating version
- Liquid soap pumps
- Water recovery kit
- Drain pump (SA80)
- 3rd water inlet
- ECO Version : lower kW rating on request

# Hardmount Washer-Extractors

| | | SA80 | SA105 | SA135 |
|---|---|---|---|---|
| INNERDRUM | | | | |
| Capacity 1:09 | kg (lb) | 8(18) | 12(26) | 15(33) |
| Capacity 1:10 | kg (lb) | 7,5(16) | 10,5(23) | 13,5(30) |
| Volume | litres | 75 | 105 | 135 |
| Diameter | mm | 530 | 620 | 620 |
| DRUM SPEED | | | | |
| Wash | rpm | 50 | 46 | 46 |
| Extraction | rpm | 820 | 760 | 760 |
| G-FACTOR | | 200 | 200 | 200 |
| HEATING | | | | |
| Electricity | kW | 3 - 7 | 3 - 7 | 3 - 7 |
| Steam | bar | 1 - 8 | 1 - 8 | 1 - 8 |
| Hot water | °C | 90 | 90 | 90 |
| Sound pressure level | dB (A) | < 65 | < 65 | < 65 |
| Water valves connection | BSP | 3/4" | 3/4" | 3/4" |
| Water pressure | kPa | 100-800 | 100-800 | 100-800 |
| Rec. water pressure | kPa | 300-500 | 300-500 | 300-500 |
| Water inlet | l/min | 20 | 20 | 20 |
| Drain valve | outer Ø mm | 76 | 76 | 76 |
| Flow amount with drain valve | l/min | 210 | 210 | 210 |
| Steam valve connection | BSP | 1/2" | 1/2" | 1/2" |
| Steam pressure | kPa | 100-800 | 100-800 | 100-800 |
| DIMENSIONS | | | | |
| Size H×W×D | mm | 1115×660×785 | 1225×750×785 | 1225×750×900 |
| Net weight | kg | 135 | 170 | 190 |
| TRANSPORT DATA | | | | |
| Packed H×W×D | mm | 1245×710×835 | 1355×800×835 | 1355×800×950 |
| Gross weight | kg | 145 | 185 | 200 |

| | A | B | C | D | E | F | G | H | I | J | K | L | M | N | O | P | Q | S |
|---|---|---|---|---|---|---|---|---|---|---|---|---|---|---|---|---|---|---|
| **SA80** | 660 | 785 | 1115 | 676 | 349 | 166 | 88 | 920 | 1010 | 113 | 218 | 293 | 415 | 1020 | 1025 | 535 | 48 | 180 |
| **SA105** | 750 | 785 | 1225 | 676 | 342 | 225 | 98 | 1030 | 1120 | 113 | 218 | 338 | 505 | 1130 | 1135 | 480 | 42 | 192 |
| **SA135** | 750 | 900 | 1225 | 788 | 342 | 225 | 98 | 1030 | 1120 | 113 | 218 | 338 | 5050 | 1130 | 1135 | 480 | 42 | 192 |
| | width | depth | height | | | | | | | | | | | | | | | |

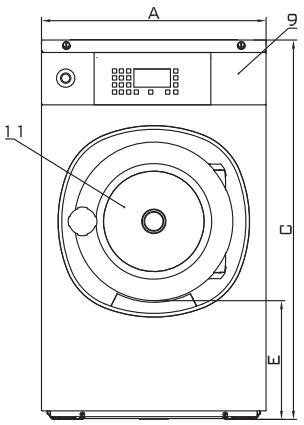


**FRONT SIDE**

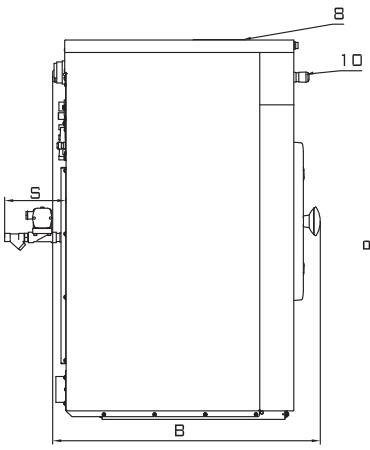


**LEFT SIDE**

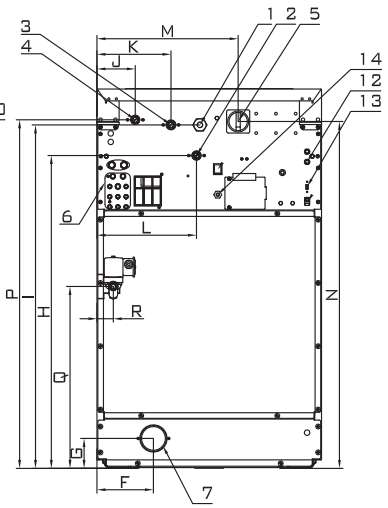


**REAR SIDE**

1. Electrical connection
2. Hot water
3. Cold water hard
4. Cold water soft
5. Main switch
6. Liquid soap connection
7. Drain
8. Soap dispenser
9. Control panel
10. Button CENTRAL STOP
11. Door opening
    SA80 : Ø 330 mm
    SA105-135: Ø 410mm
12. Fuses
13. USB port
14. Electrical connection to liquid soap pumps