Odo, Toshihiro, et al. "Design and construction of heat transport systems of the prototype fast breeder reactor MONJU." International conference on fast reactors and related fuel cycles. 1991.

DESIGN AND CONSTRUCTION OF HEAT TRANSPORT SYSTEMS OF THE PROTOTYPE FAST BREEDER REACTOR MONJU

TOSHIHIRO ODO*
NOBUTAKA OHKUMA**
MASAAKI EBASHI*
TOMOYUKI YAMADA**
KINYA OGAWA***
TAKUHO MIYAGI****

ABSTRUCT

The heat transport system of MONJU consists of three primary and three secondary sodium loops. A circulation pump of the sodium free surface centrifugal type is installed in the cold leg of each primary and secondary loop. Three intermediate heat exchangers are of the parallel counter flow type without a sodium free surface. An auxiliary cooling system is provided in each secondary loop to remove decay heat after reactor shut down. The primary loop piping is installed in an elevated loop configuration to assure core coolability under primary sodium leak conditions. Construction of the heat transport system was completed in April 1991.

I. INTRODUCTION

The reactor heat transport system of MONJU consists of three loops, the primary and secondary sodium loops and a steam/water loop, as shown in Fig.1. These loops are thermally connected through three intermediate heat exchangers (IHXs) and three steam generators(SGs), each of which has a heat transport capacity of about 238 MWt. An auxiliary cooling system (ACS) is provided in each secondary sodium loop to remove decay heat after reactor shut down. Installation of the reactor heat transport system was completed in April 1991. Preoperational testing is now under way. This paper describes the design and construction of the primary and secondary sodium systems except for the steam generators, which are included in the next paper(1) covering the steam/water system.

II. SYSTEM DESIGN

The primary sodium system consists mainly of a primary cooling system, an auxiliary sodium system and a primary argon gas system, while the secondary sodium system is composed of corresponding systems to the primary system plus the ACS, as shown Fig.1. Principal parameters of these systems are summarized in Table 1.

---

* Power Reactor and Nuclear Fuel Development Corporation
Monju Construction Office, 2-1 Shiraki, Tsuruga-shi, Fukui 919-12, Japan
** Power Reactor and Nuclear Fuel Development Corporation
1-9-13 Akasaka, Minato-ku, Tokyo 107, Japan
*** Hitachi Ltd.
Hitachi Works, 3-1-1 Saiwai-cho, Hitachi-shi, Ibaragi 317, Japan
****Toshiba Corporation
8 Shin-sugita-cho, Isogo-ku, Yokohama-shi, Kanagawa 235, Japan

A. Main Cooling System

A circulation pump, which can be driven either by the main motor or a pony motor, is located in the cold leg of each primary and secondary loop, respectively. A check valve is installed at the outlet of each primary circulation pump to prevent excessive reverse flow through the loop in case the pump fails. Sodium which overflows through a hydrostatic bearing in each pump casing is introduced into the pump overflow column in which gas contained in sodium is separated. The sodium then flows back to pump suction.

The location of the primary circulation pumps dominates the system design of the primary cooling system. The pumps were located in the cold leg to allow a lower design temperature and to reduce the length of hot leg piping. This location, on the other hand, reduces the permissible pressure loss in the IHXs. The merits of cold leg pumps, especially from the standpoint of pump reliability, were given great importance in the system design, but this placement resulted in consideration of some countermeasures, described later, for reducing the pressure loss in the IHXs and the hot leg piping systems.

Most of the primary piping is installed above the level of reactor outlet nozzle in order to guarantee core coolability under primary sodium leak conditions. Any piping below that level, along with pump and IHX, is contained within guard vessels.

The secondary cooling system, coupled with the ACS, also has a role as the decay heat removal system. The ACS is designed as an engineered safety system which provides the heat removal capacity required by safety design criteria. Design features of the ACS are described in the next section.

The relative elevations of the core, IHX, an air cooler (AC) of the ACS and SG are appropriately arranged, as shown in Fig.2, to assure natural circulation of the sodium in each primary and secondary loop so as to remove decay heat immediately after reactor shut down, in the case of a loss of power without a backup power supply.

B. Auxiliary Cooling System (ACS)

The three independent ACSs provide decay heat removal capacity of 15 MWt each not only for maintenance and refueling but also for emergency conditions such as a loss of power or a piping failure.

The ACS is shown schematically in Fig.3. At normal operating conditions, where the secondary sodium temperature at IHX outlet is 505 ^{o}C and SG outlet 325 ^{o}C, the ACS is standing by and only a small amount of sodium flows through a bypass line around the AC outlet valve. This sodium flow keeps the sodium temperature at AC outlet the same as that of the SG outlet.

In order to start up the ACS for decay heat removal, the secondary sodium flow path changes from the SG to the ACS by closing the SG inlet valve and by opening the AC outlet valve, following a change from the main motor to the pony motor for coolant circulation. It is also necessary to start a blower on the AC. While the ACS is operating for decay heat removal, the sodium temperature at AC outlet is controlled with an air dump and an inlet vane of the AC to reduce thermal shock and sodium over-cooling. The ACS starting-up sequence, including the open/close time of valves and the starting-up time of the blower, was determined with consideration of mitigating thermal shock.

To confirm the validity of the operation method mentioned above, a 1/5 scale model of ACS was installed in the 50MWt SG test facility at the Oarai Engineering Center (OEC) of the Power Reactor and Nuclear Fuel Development Corporation (PNC). Various tests were conducted to simulate the operation of the actual system. These results were reflected in the design of the ACS. The AC was also designed on the basis of research and development studies on the thermal and fluid dynamics characteristics of the system.

C. Cover Gas System

The cover gas system consists of a primary argon gas system in a closed cycle and a secondary argon gas system in an open cycle.

The amounts of gaseous fission products contained in the cover gas of the reactor vessel are reduced with activated charcoal beds at room temperature. The holdup times of the beds are 80 hours for krypton and 60 days for xenon. Aiming at gaseous waste volume reduction, the processed gas from the beds is recycled in the primary argon gas system. The functions of this system are to charge and discharge argon gas to seal pump shafts and to maintain a cover gas pressure in the reactor vessel of about 5,500 mmAq. This relatively high pressure can suppress cavitation in the circulation pump and also prevent negative pressure in the primary sodium during reactor operation. On the other hand, the cover gas pressure is set below 600 mmAq after reactor shutdown.

The secondary argon gas system is provided to maintain a cover gas pressure of 10,000 mmAq in the SGs, pumps and sodium dump tanks. This high pressure maintains the pressure of secondary sodium in the IHX above that of the primary sodium under any conditions of reactor operation and shutdown.

III. DESIGN, FABRICATION AND INSTALLATION OF THE MAIN COMPONENTS

A. Intermediate Heat Exchanger (IHX)

design The IHX is of the parallel counter flow type without a sodium free surface. The primary sodium flows in the shell side and secondary sodium flows through the tubes. The outer shell measures 3 m in diameter and 12 m high. A sectional view is shown in Fig. 4.

Design parameters, such as distance between heat transfer tubes and thin tube wall thickness, were selected so as to reduce the size of the IHX. The heat capacity of each IHX is 238 MWt. The Lubarsky-Kaufman equation(2) was applied in the design.

The limited pressure loss in the IHX, as mentioned in the section II, made it difficult to control flow distributions. Perforated plates therefore were set in the primary and secondary inlet plenums to obtain uniform sodium flow distributions. Their effectiveness was confirmed by analyses and tests; a 1/2 scale water flow test for the primary inlet plenum, a full scale 1/6 sector model for the primary bundle, and a 1/2 scale model for both the whole primary flow path and the secondary inlet plenum as shown in Fig. 5.

In the structural design of the IHX, considerations have to be given to creep-fatigue strengths of the structural materials, since the operating temperature is about 530 °C for the primary inlet sodium and high thermal stresses occur during transients. To assure the structural reliability, analyses by the finite element method, FEM, were carried out under transient conditions. Inelastic analyses were also applied to the upper tube sheet and support skirt in order to evaluate their plastic and creep behavior. The reliability for aseismatic class "As" components was verified by dynamic analyses with the 6 beams model. The validity of the design was confirmed by structural tests, using a 1/2 scale model for the upper tube sheet, a full scale model for the upper bellows, pieces of the same specification tube for the heat transfer tubes, and so on.

fabrication and installation The tube bundle was fabricated with special attention to ensure uniform flow distributions of the primary sodium in the IHX. Inner shrouds, which are thin but large in diameter, were machined after welding to maintain a small tolerance.

A hot wire tungsten inert gas welding method with narrow grooves was developed for welding outer cylinders and shrouds. This new welding method with one pass welding and hot wire made it possible to increase welding deposits per unit time, to improve welding efficiency and to decrease strains of the welded portions.

In assembling the IHX at a manufacturer's factory, a subassembly of the inner shroud and upper tube sheet vertically positioned was fit-up with baffle plates (shown in Photo.1.), an outer shroud, a downcomer, a lower tube sheet and an outer casing, in that order, aiming to insure straightness, preventing deformation by gravity and making welding work easy. Then the assembly was placed in the horizontal position and furnished with heat transfer tubes and other components.

Three IHXs were sent to the site by ships and installed in June and July 1989, as shown in Photo.2.

B. Circulation Pumps

design Six circulation pumps, three for each primary and secondary cooling system, are of the sodium free surface centrifugal type. Specifications are shown in Table 2.

The primary circulation pump includes the hydrodynamic components (impellers and diffusers), the shaft, the bearings and the shaft sealing elements with the following characteristics:

(1) A double casing is used so that the internal structure of the pump can be removed for maintenance work.

(2) Since the pump has a long shaft, the impeller and lower bearings are immersed in sodium even for the lowest free sodium level, in the case of a sodium leak in the primary cooling system.

(3) A sodium free surface is maintained in the pump casing to seal the shaft with the argon cover gas.

(4) A γ-ray shielding plug is installed above thermal shielding plates which are set at the cover gas layer. This plug and plates enable operators and maintenance people to approach the upper part of the pump.

In mockup pump tests conducted in a sodium loop at the OEC/PNC, a large temperature difference was observed in the circumferential direction of the casing in the cover gas layer. It was confirmed through experiments that the temperature difference in the circumferential direction was caused by the natural convection of the cover gas between the inner and outer casings. In order to prevent this convection, plates were installed in the relevant ring-shape space shown in Fig.6. As a result the maximum temperature difference of the outer casing was reduced from the initial 74 °C to about 10 °C, as shown in Fig.6. This modification substantially reduces the amount of thermal deformation in the casing.

As for secondary circulation pumps, the principal structure is that of the ordinary Byron Jackson type with a slim and small body.

Aseismatic analyses and thermal stress analyses under transient conditions were carried out for both the primary and secondary pumps in the same manner as those applied to other major components.

fabrication and installation The shaft of primary pump is so long that following efforts were made to machining it: (1) a run-out deviation test was conducted for rough finished material at the working temperature of pump, (2) a cylindricity deviation of the annular part was strictly controlled to assure a highly precise balance, and (3) several thick rings left on the shaft contributed to easy balancing of shaft.

Colmonoy, a cobalt-free hard facing material made by Wall Colmonoy Corp., was adopted for shaft sealing elements of primary pump for the purpose of exposure dose reduction in maintenance work. Material and processing tests were conducted to confirm its reliability prior to actual use of this material.

In factories, performance tests using the main motor or the pony motor were conducted for both the primary and secondary pumps in specialized closed loop test facilities using demineralized water at room temperature. The results adequately satisfied multiple-point specifications.

Both outer casings and inner assemblies of the primary circulation pumps were transported to the site by ships, while those of the secondary circulation pumps were transported by trucks.

Installation work began with the setting of each outer casing, then pipes were connected and a pressure endurance test was made. The sequences ended with the insertion of the inner assembly into the outer casing, while efforts were made to keep the assembly centered because of the small clearance of few millimeters between outer and inner casings. The installation work period of the primary pumps was from June to December 1989 and that of secondary pumps was from September 1989 to April 1990 (see Photo.3. and 4.).

C. Piping

design Reduction in the influence of thermal expansion of the primary main piping allows one to minimize the expansion space of piping, resulting in a smaller diameter reactor containment vessel. For this purpose, a modified hexagon layout was selected for the primary main piping system, as shown in Fig.7, from the view point of minimizing the distance of three fixed points; the reactor vessel, the circulation pump and the IHX. The aseismatic design of this compact layout has been made possible owing to not only detailed analyses but also a specially prepared basic design standard named "Structural Design Guide for Class 1 Components of Prototype FBR in Elevated Temperature Service".

Pipes in the secondary cooling system are quite long because SGs and circulation pumps are installed in line in the reactor auxiliary building as shown in Fig.7.

The principal parameters of the piping systems are summarized in Table 3. The size of both the primary hot leg piping from the reactor vessel outlet to the IHX and the crossover leg piping from the IHX to the primary pump is 813 mm in diameter. The cold leg piping is 610 mm in diameter. The size of the 813 mm piping was selected on the basis of limiting the pressure drop from the reactor vessel to the primary pump suction.

In the design of both the primary and secondary piping systems, flexibility is necessary for the reduction of stress caused by thermal expansion, but a stiffness is also needed for aseismatic reliability. In order to satisfy these two competing requirements, supporting equipment, such as snubbers, spring hangers, constant hangers and rod restraints, were properly arranged. Mechanical snubbers were adopted for the primary piping instead of oil snubbers because of their better radiation resistance, based on experience in the fast experimental reactor JOYO. In addition, the integrity of piping in aseismatic design was confirmed by mockup tests.

installation Optimization of welding conditions by mockup tests and special equipment allowed the cylindricity of the piping to be preserved during welding and transportation. For welding, use of insert rings gave excellent results in both workability for putting two grooves together and reproducibility of back waves. As many pieces of pipe as possible were welded at the factory to minimize the welding work at the site.

The installation of the main primary piping, including connection to the principal components, began in June 1989 and was completed in January 1990 together with satisfactory results of endurance tests at the maximum working pressure. As for the secondary piping, installation began in August 1989 and ended in June 1990 in the same way as primary system.

All ancillary piping equipment, such as heaters and thermal insulators, were installed by February 1991.

D. Sodium Auxiliary Equipment

cold traps The cold trap of the primary sodium system purifies sodium through stainless steel mesh and removes about 70 kg oxygen. The required mesh volume was determined by experiment to be about 1 m^3 per unit. The design of the cold trap has been optimized for compactness and better efficiency.

The cold trap in the secondary sodium system can remove about 18 kg of mainly hydride impurities, converted into 275 kg of oxygen by weight, to lower the hydrogen concentration in the sodium down to 170 ppb. This low background value is required for the hydrogen detectors in the SGs. The cold trap, therefore, has been specially designed as a hydrogen trap with the following considerations: (1) hydrogen impurities were found to be trapped by a mechanism of precipitation on the mesh rather than by filtration by the mesh, (2) a rough mesh with a square grid was adopted to increase the trapping capacity per unit volume.

Two primary cold traps, one spare, and six secondary cold traps, two for each of the three loops to be used in parallel, had been fabricated and installed by May and August 1989, respectively.

electromagnetic pumps Electromagnetic pumps (EMPs) are used for smaller capacity pumps in the primary and secondary sodium systems. These pumps, which have no active components and shaft seals, have the advantage of easier maintainability.

A flat linear induction pump (FLIP) was chosen for the primary auxiliary system, set at radiation control area, because of the ease of changing coils in cases such as isolation damage, resulting in a reduction of exposure during repair work. On the other hand, an annular linear induction pump (ALIP) was selected for the secondary auxiliary system because of its popularity and structural reliability due to its annular duct shape.

In fabrication, steps leading to a reduction of the residual stress in ducts were as follows; (1) each rectangular duct of FLIPs was machined from a bar of SUS304 with a lathe without welding, (2) during welding the butt welding process was generally adopted instead of fillet welding and (3) reducers were solution treated during machining process. Performance tests in sodium done in the shop for all of the FLIPs before shipment gave satisfactory results.

Each EMP had been installed and connected with each system's piping by the end of 1989, insuring installation precision and compatibility with the gas cooling equipment for EMPs.

IV. Concluding Remarks

Many technologies, a part of which were reviewed in this paper, have been developed through design and construction work on the MONJU heat transport system. The experience is now being applied to the planning of the demonstration plant. The system is now being validated through preoperational tests to be followed by start-up tests and power operation.

REFERENCES

1. S. SAKAI, et al.: *Design and construction of the steam generator and water steam systems of the prototype fast breeder reactor MONJU,* submitted to this conference.

2. B. LUBARSKY, et al.: *Review of experimental investigation of liquid-metal heat transfer,* NACA TN3336

Table 1. Principal Parameters of Heat Transport Systems

primary cooling system	
number of loops	3
heat transfer capacity	714 MWt / 3 loops
flow rate	15.3 x 10^6 kg/h / 3 loops
reactor in/out temp.	400 / 530 °C
secondary cooling system	
number of loops	3
flow rate	3.7 x 10^6 kg/h / each loop
IHX in/out temp.	325 / 505 °C
auxiliary cooling system	
number of loops	3
heat removal capacity	15 MWt / each loop
sodium flow rate	2.3 x 10^5 kg/h / each loop
pri. aux. sodium system	
flow rate	
overflow system	5 x 10^4 kg/h
purification system	1 x 10^4 kg/h
sec. aux. sodium system	
flow rate	1 x 10^4 kg/h / each loop
maintenance cooling system	
number of loops	1
heat removal capacity	2 MWt
sodium flow rate	1.2 x 10^5 kg/h

Table 2. Major Design Parameters of circulation pumps

	primary pump	secondary pump
capacity	100 m^3/min.	71 m^3/min.
delivery head	92 m sodium	55 m sodium
number of rotations	840 rpm	1,100 rpm
working temperature	400 °C	325 °C
diameter	1,800 mm	1,100 mm
height	8,100 mm	5,600 mm
material	SUS304	SUS304

Table 3. Major Parameters of the Piping System

	primary cooling system			secondary cooling system		
	hot leg	cross over	cold leg	hot leg	middle leg	cold leg
diameter	813 mm	813 mm	610 mm	559 mm	559 mm	559 mm
length / 3 loops		330 m			900 m	
max. working temp.	550 °C	420 °C	420 °C	525 °C	490 °C	345 °C
max.working pressure	2 kg/cm^{2}g	2 kg/cm^{2}g	10 kg/cm^{2}g	8 kg/cm^{2}g	6 kg/cm^{2}g	9 kg/cm^{2}g
working temp.	529 °C	397 °C	397 °C	505 °C	469 °C	325 °C
class of piping		1			3	
aseismatic class		As			As (B)	
material		SUS304			SUS304	

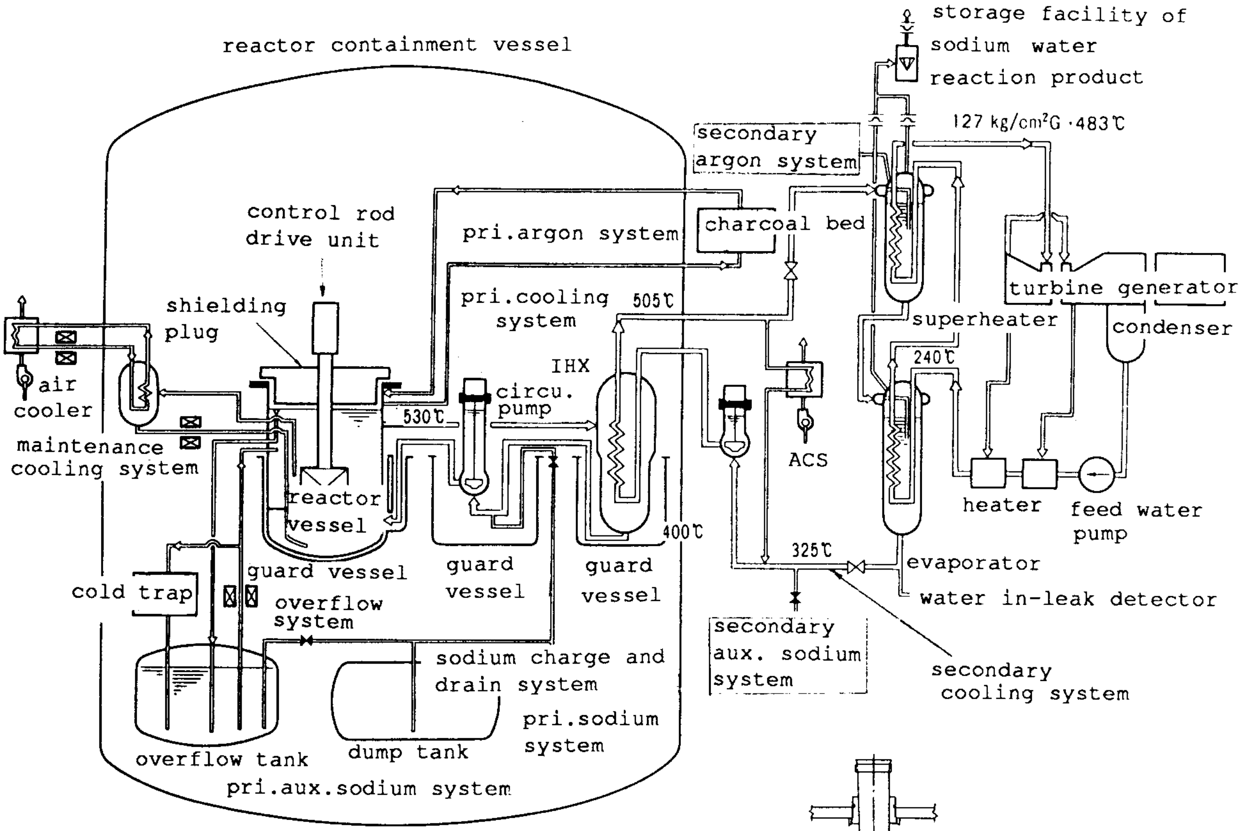

Fig.1. Reactor Heat Transport System of Monju

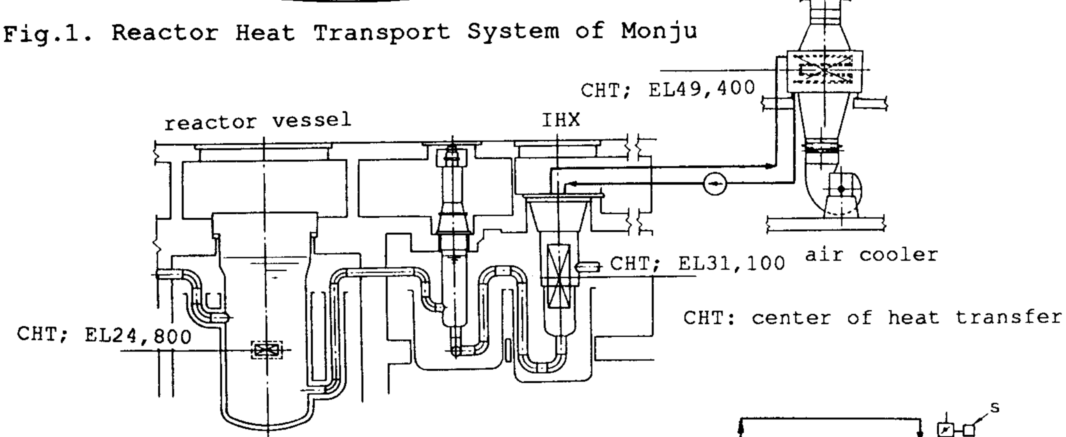

Fig.2. Relative Elevation of the Core,
IHX and Air Cooler

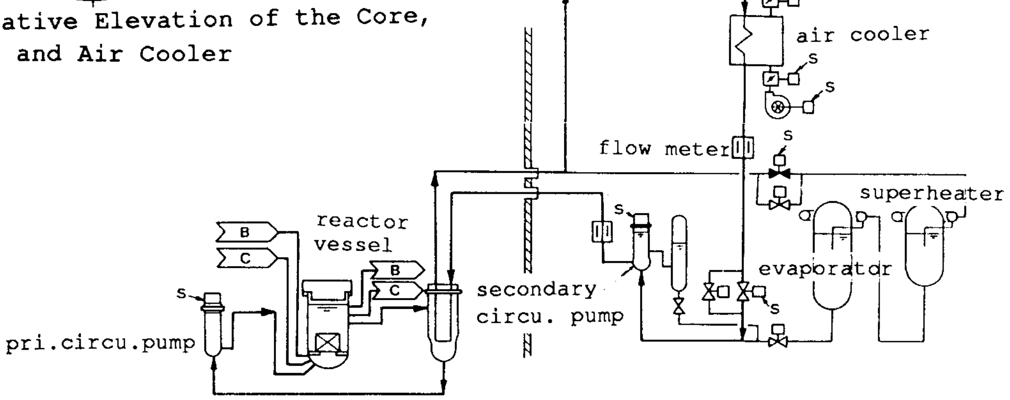

Fig.3. Schematic Flow Diagram of the Auxiliary Cooling System

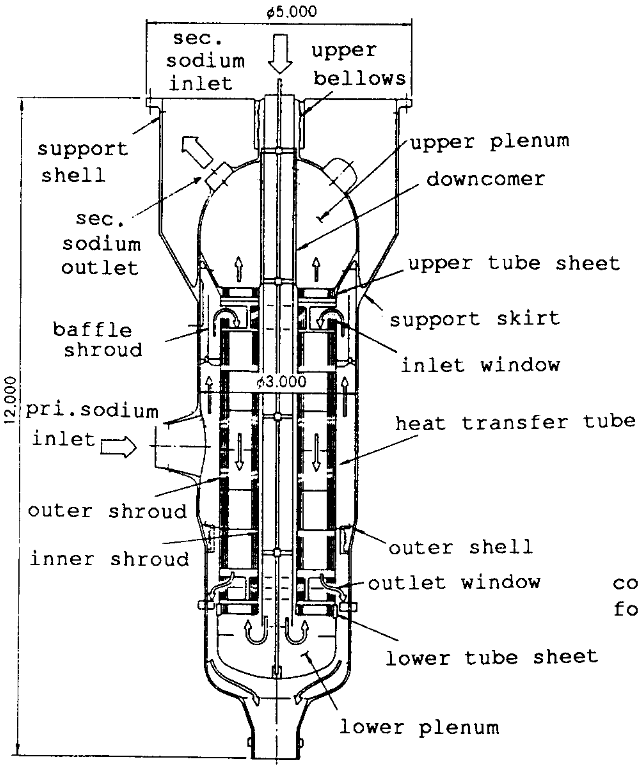

Fig.4. Section Diagram of the IHX

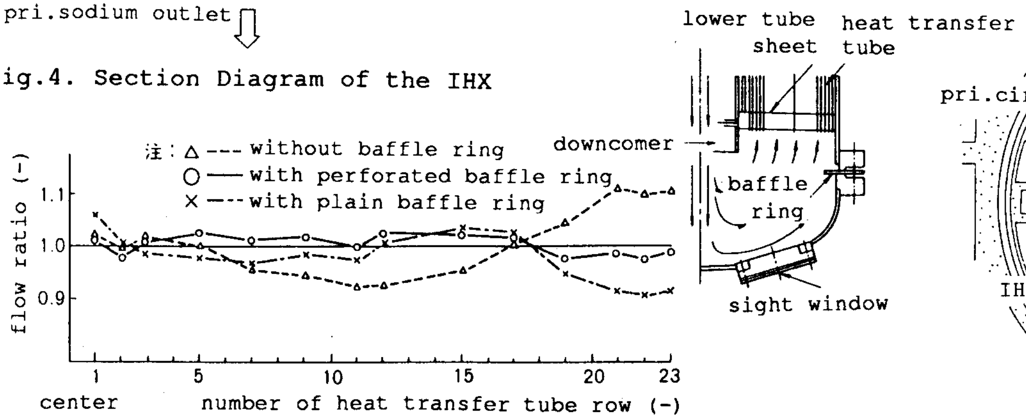

Fig.5. Effect of the Baffle Rings Set at the Lower Plenum of IHX (Water Flow Test with 1/2 Model)

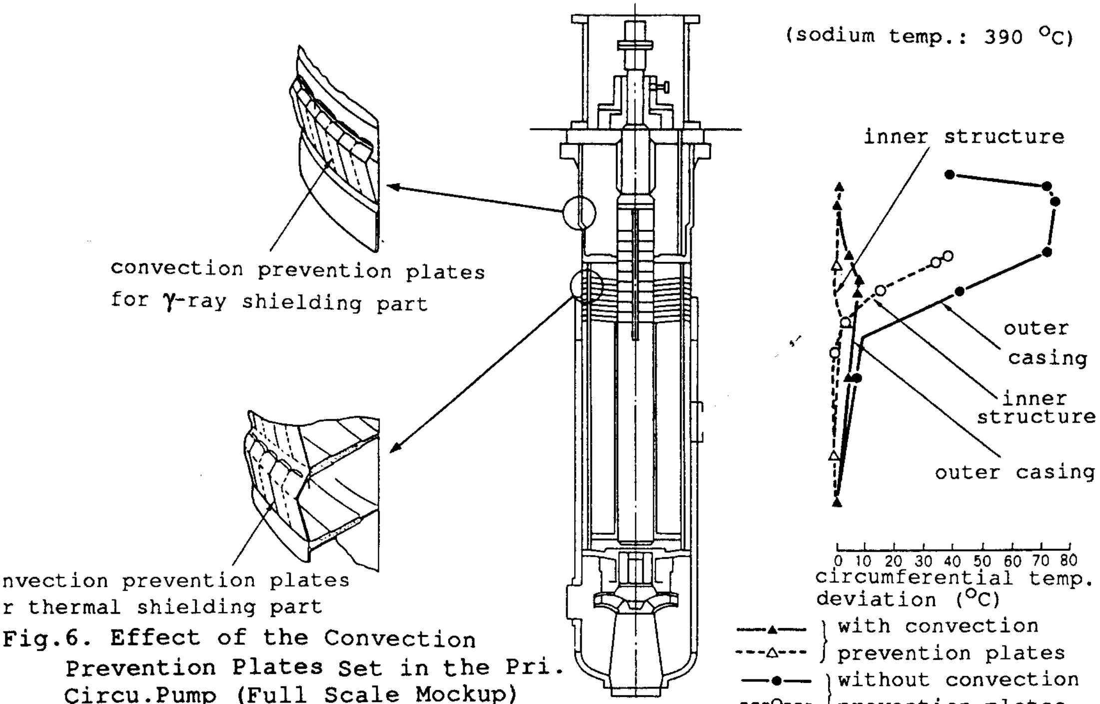

Fig.6. Effect of the Convection Prevention Plates Set in the Pri. Circu.Pump (Full Scale Mockup)

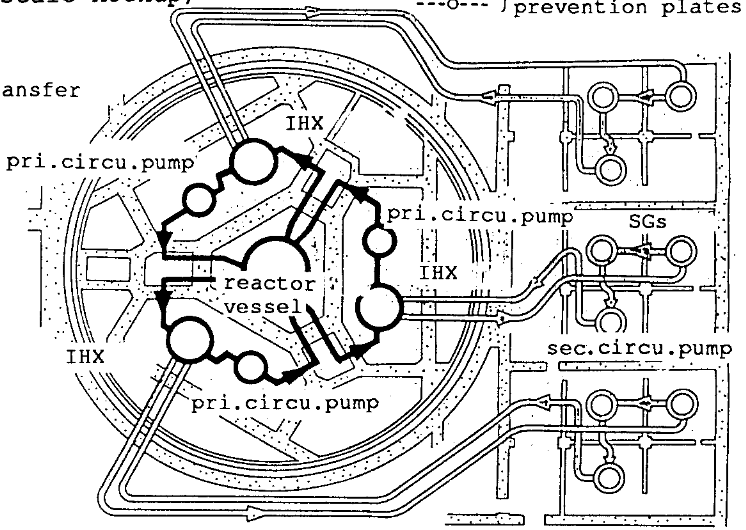

Fig.7. Layout of the Main Cooling Systems

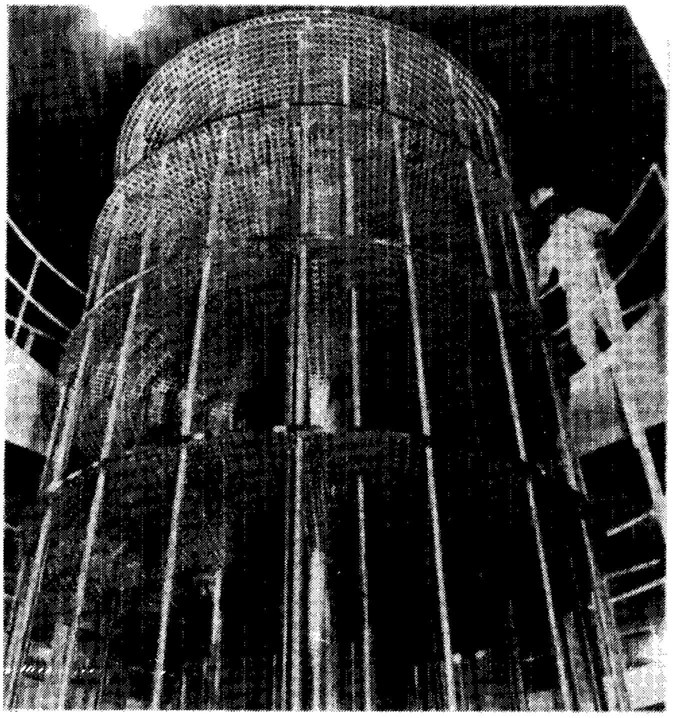

Photo.1. Assembly of IHX baffle plates.

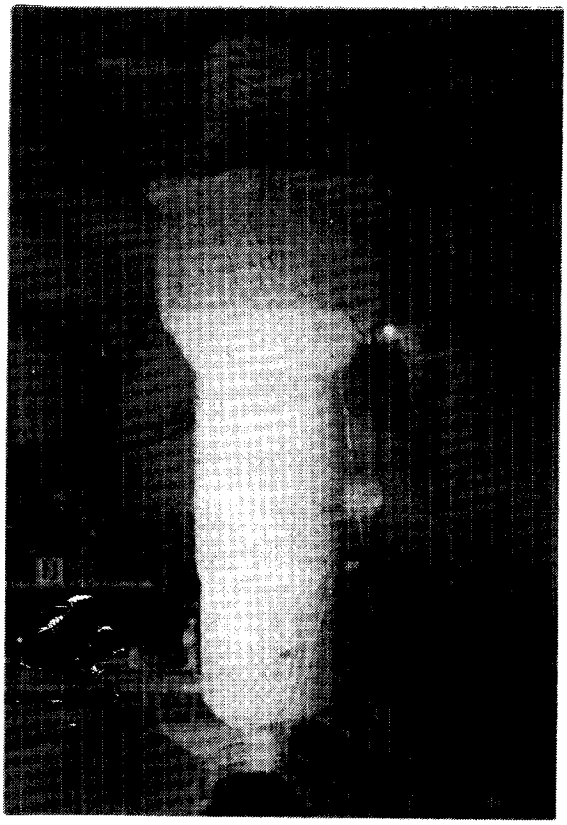

Photo.2. Installation of the IHX.

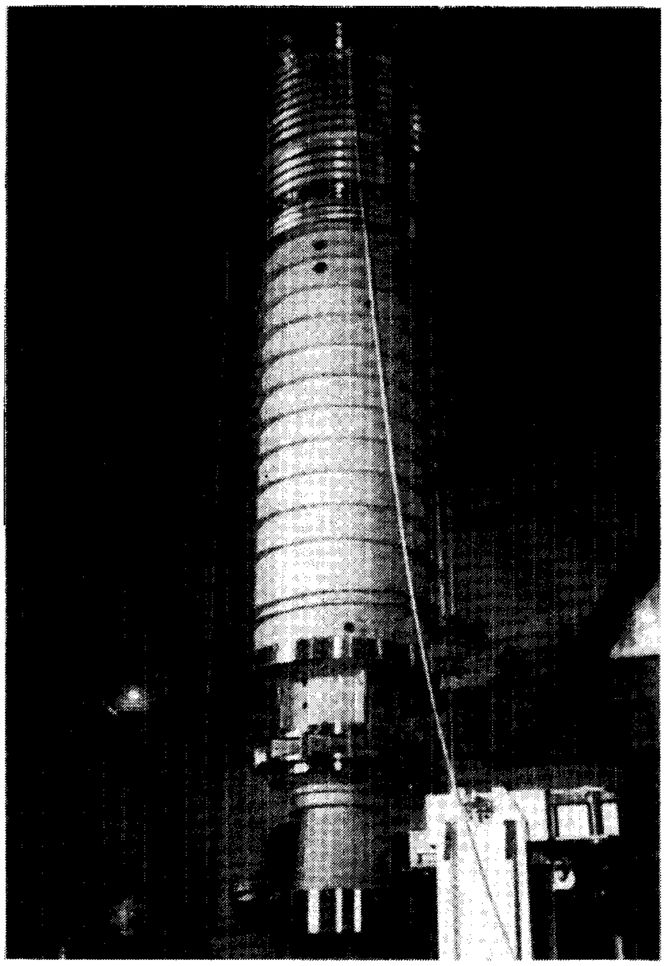

Photo.3. Installation of the primary circulation pump inner assembly.

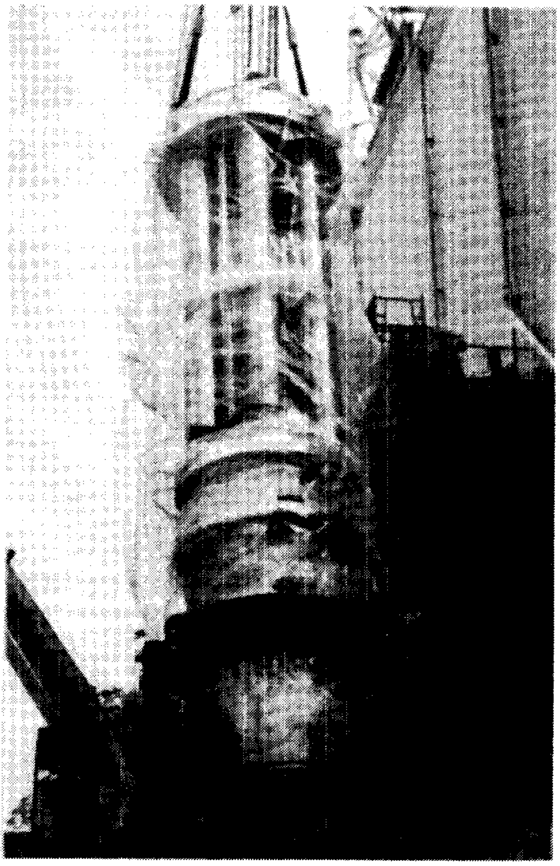

Photo.4. Installation of the secondary circulation pump inner assembly.