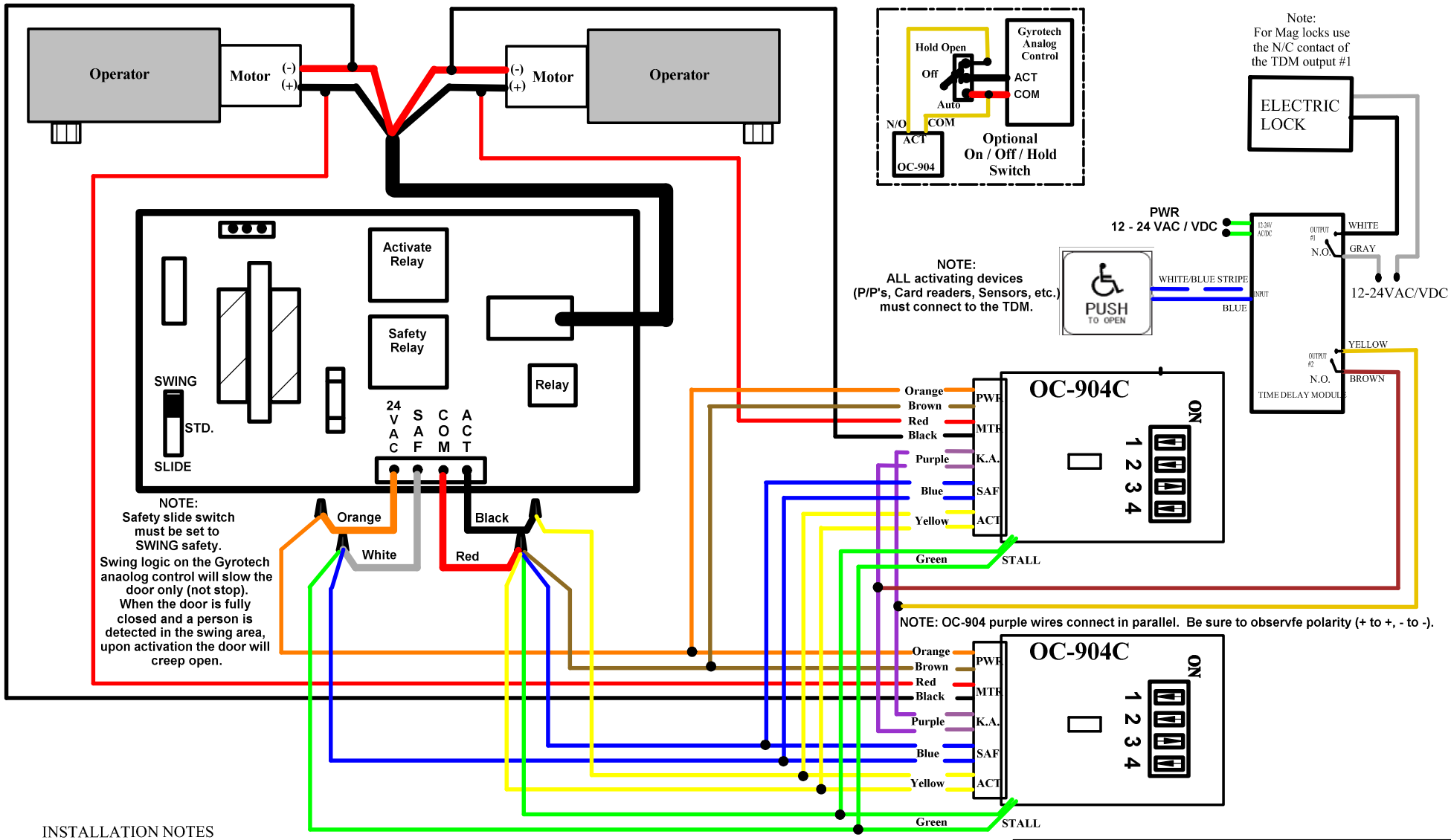

INSTALLATION NOTES

1. Set door speeds and verify proper door operation prior to final connections of sensors system.
2. Technician MUST WALK TEST to verify function and detection patterns comply with ANSI/BHMA A156.10 requirments.

Title: Gyrotec 300/400 Sim Pair w/ Elite & Electric Lock		Drawing # 01DORASTELI03
Drawing By: JAS	Date: 11-26-08	Sheet: 1 of 1

Optex Technologies Inc.
3882 Del Amo Blvd., Suite 604,Torrance, CA 90503
Office: (800)877-6656, Fax: (310)214-8655