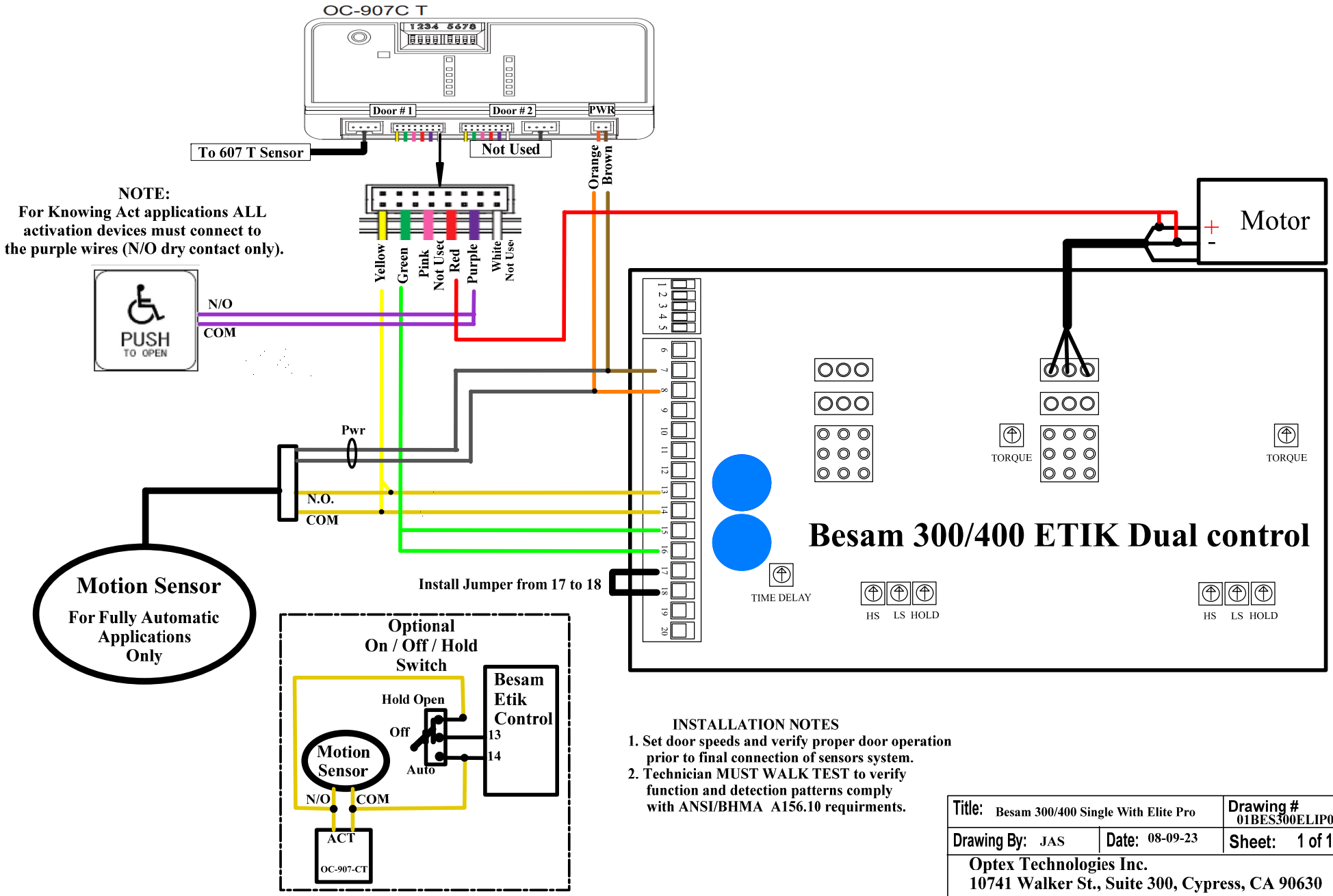
OC-907C T
1234 5678
Door # 1
Door # 2
PWR
To 607 T Sensor
Not Used
Orange
Brown
NOTE:
For Knowing Act applications ALL activation devices must connect to the purple wires (N/O dry contact only).
Yellow
Green
Pink
Not Used
Red
Purple
White
Not Used
PUSH
TO OPEN
N/O
COM
Pwr
N.O.
COM
Motion Sensor
For Fully Automatic Applications Only
Install Jumper from 17 to 18
Motor
+
-
TORQUE
TORQUE
Besam 300/400 ETIK Dual control
TIME DELAY
HS
LS
HOLD
HS
LS
HOLD
Optional
On / Off / Hold
Switch
Hold Open
Off
Auto
Motion Sensor
N/O
COM
ACT
OC-907-CT
Besam Etik Control
13
14
INSTALLATION NOTES
1. Set door speeds and verify proper door operation prior to final connection of sensors system.
2. Technician MUST WALK TEST to verify function and detection patterns comply with ANSI/BHMA A156.10 requirments.
Title: Besam 300/400 Single With Elite Pro
Drawing # 01BES300ELIP01
Drawing By: JAS
Date: 08-09-23
Sheet: 1 of 1
Optex Technologies Inc.
10741 Walker St., Suite 300, Cypress, CA 90630
Office: (800)877-6656, Fax: (310)214-8644