# Kelly Klosure Systems Technical Guide

Revision: August 2026

## Table of Contents


| | |
|---|---|
| Page 2-3 | System Introduction |
| Page 4-6 | Building Configurations – 2:12Pitch Trussed Gable Roof |
| Page 7-9 | Building Configurations – 4:12 Pitch Gable Roof |
| Page 10 | Building Configurations – Single Slope & Lean-To Structures |
| Page 11 | Building Configurations – Flat Roof Interior Structures |
| Page 12 | Building Configurations – Canopies & Roof Structures |
| Page 13 | Introduction to Structural Load Capacity |
| Page 14-15 | Permanent Foundation Options |
| Page 16-17 | Temporary Foundation Options |
| Page 18 | The Pre-Framed Modular Panel |
| Page 19 | The Pre-Framed Modular Panel – Steel Panel Frame |
| Page 20 | The Pre-Framed Modular Panel Options – Panel Frame Finish Options |
| Page 21 | The Pre-Framed Modular Panel Options – Exterior Sheeting Options |
| Page 22 | The Pre-Framed Modular Panel Options – Factory Installed Insulation |
| Page 23 | The Pre-Framed Modular Panel Options – Insulation Liner |
| Page 24 | Factory Installed Components |
| Page 25-27 | Factory Installed Components – Personnel Doors & Hardware |
| Page 28 | Factory Installed Components – Windows |
| Page 29 | Factory Installed Components – Light Transmitting Panels |
| Page 30-31 | Factory Installed Components – Ventilation Options |
| Page 32 | Factory Installed Components – HVAC Framing |
| Page 33 | Factory Installed Components – Equipment Door Framing |
| Page 34 | Building Accessories – Equipment Doors |
| Page 35 | Kelly Klosure Buildings and the Environment |
| Page 36 | Available Custom Features – Non-Combustible Construction |
| Page 37 | Available Custom Features – Sound Attenuation |
| Page 38-39 | Available Custom Features – Removable Roof Sections |
| Page 40 | Available Custom Features – Crane Liftable Buildings |
| Page 41 | Available Custom Features – Factory Installed Framed Openings |
| Page 42 | Available Custom Features – Pre-Wired Electrical Packages |
| Page 43 | Available Custom Features – High Wind & Hurricane Rated Structures |
| Page 44 | Available Custom Features – Anti-Terrorism Rated Components |
| Page 45 | Available Custom Features – Corrosion Resistance in Hostile Environments |
| Page 46 | Available Custom Features – Modular 2-Story Buildings |
| Page 47 | Available Custom Features – Modular Floor Systems |
| Page 48 | Available Custom Features – Examples |
| Page 49 -52 | Shipping, Handling & Installation |




Copyright 2026 Kelly Group, Inc.

Kelly Klosure System's buildings are based upon the pre-framed modular panel. This concept takes a 3' wide piece of steel siding and factory attaches it to a structural steel frame. The purpose of this concept is to allow for faster and easier installation of the building in the field.

The pre-framed modular panel is the structure of the building. The factory assembled panels, with a few additional steel parts, bolt together in the field to create the building shell. The modular panel concept further allows for factory installed and finished windows, light transmitting roof panels, louvers, personnel doors and other openings. These items are factory installed directly into wall or roof panels to create professional quality results without the need for highly skilled installers onsite.

The panelized system creates a building that is extremely versatile to changing needs. Not only can it support factory installed features such as removable roof and wall sections, temporary foundations on existing grade and complete crane liftable structures; it can also support the addition of these features later in its life span. Doors and windows can be easily relocated simply by swapping panels. The building can be quickly expanded in length. If necessary, the entire building can be taken apart, moved and reinstalled at a new location.

This guide will give an introduction to the engineering concepts, factory installed options and features and overall building configuration options available with the Kelly Klosure Systems buildings.

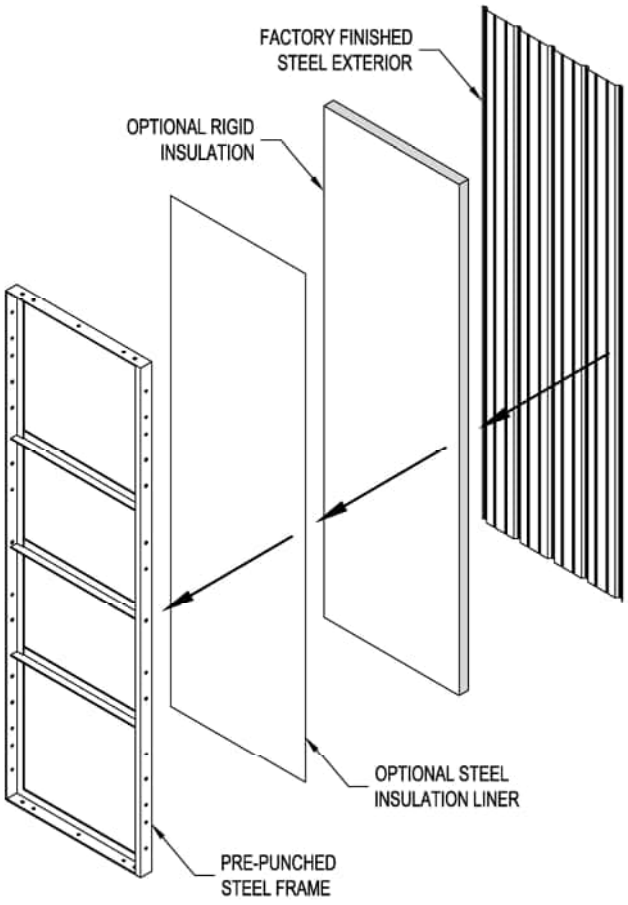


The Kelly Klosure Pre-Framed Modular Panel




Copyright 2026 Kelly Group, Inc.

Kelly Klosure's factory finished panels have an overlapping edge on one panel that corresponds to an underlap edge on the next panel. In the field, as the panels are attached to each other, this overlapping edge creates a weather tight seal without need for stitch screws or sealant.

As one modular panel is attached to the next, the adjacent vertical members of both panels are bolted periodically up the entire length of the panel to create a combined structural member that is stronger than the two separate members. This combined member formed from the bolting of two panel frames together is the basis for a Kelly building's strength.

The Kelly Building System uses two different structural systems to create pre-engineered buildings from 6' wide up to 54' wide and custom structures beyond 54' wide.

- Repetitive moment frames with knee and ridge braces
- Roof trusses with shear walls

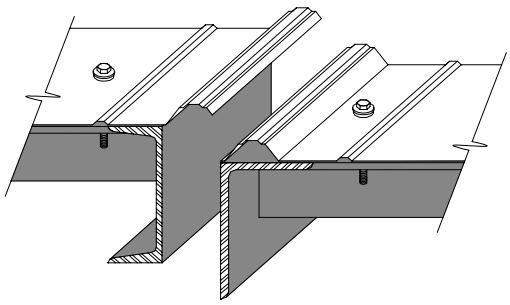

Kelly Panel's Anti-Siphon Overlapping Edge

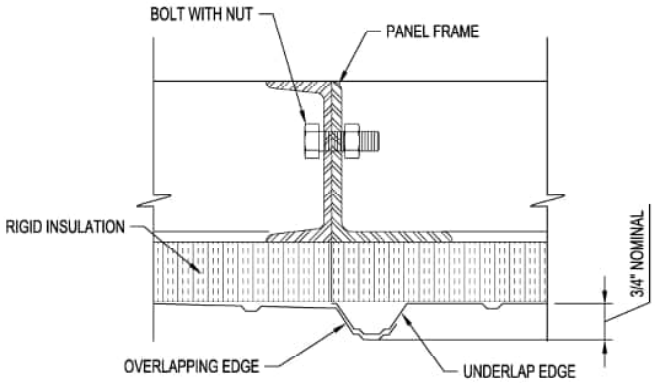


Two Panels Create a Structural Combined Member



42' Wide Building
Using Repetitive Moment Frames with Knee & Ridge Braces



24' Wide Building
Using Trussed Roof and Shear Walls


Copyright 2026 Kelly Group, Inc.

Kelly's smaller buildings use a 2:12 pitch trussed gable roof structure and shear walls to resist wind, snow and seismic loads. These buildings are pre-engineered in widths from 6' wide to 24' wide and eave heights up to 14'-0".

Standard Features:

- Fast assembly with minimal equipment; buildings assemble 4 times faster than stick built structures.
- Pre-engineered to IBC 2021 for all 50 States with wind loading up to 160 MPH and roof loading up to 50 PSF
- Buildings are relocatable and reconfigurable due to the modular panel design.
- Roof structure can support loads from lighting, HVAC, plumbing etc.



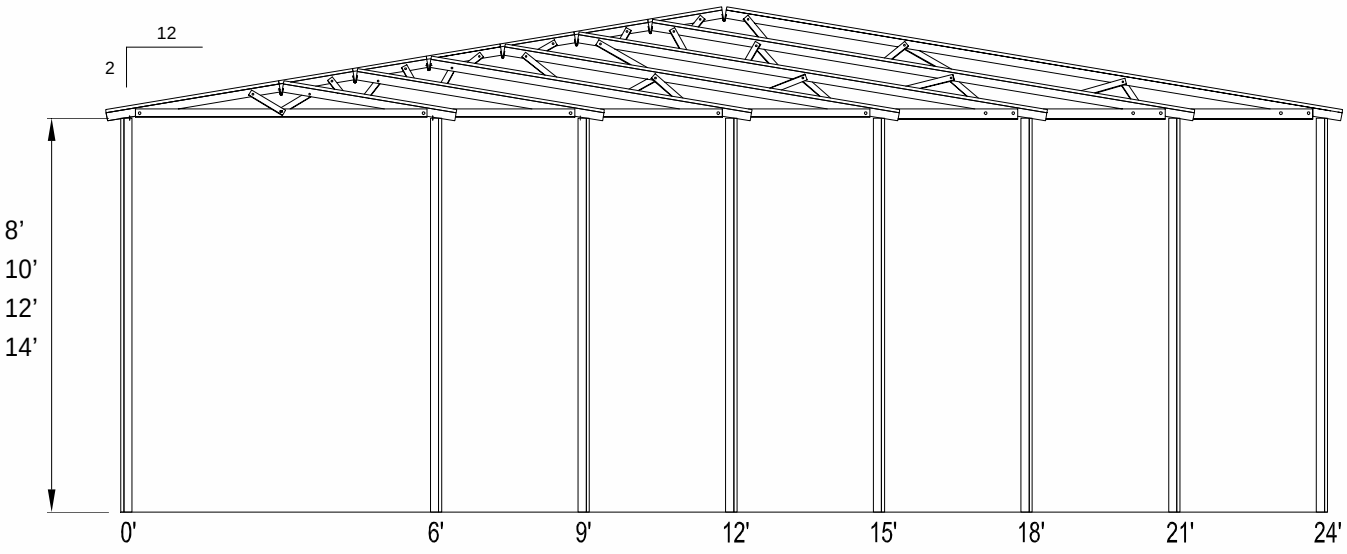


Pre-Engineered Widths & Heights for 2:12 Pitch Trussed Roof Buildings


Copyright 2026 Kelly Group, Inc.

Kelly buildings arrive at the site via flat bed trucks in easy to handle racks and crates. All material can be easily handle with a small fork lift. For smaller buildings installed in areas where equipment is restricted, all components of the building can be handled individually by hand.



A Kelly Klosure Building Ready for Shipment

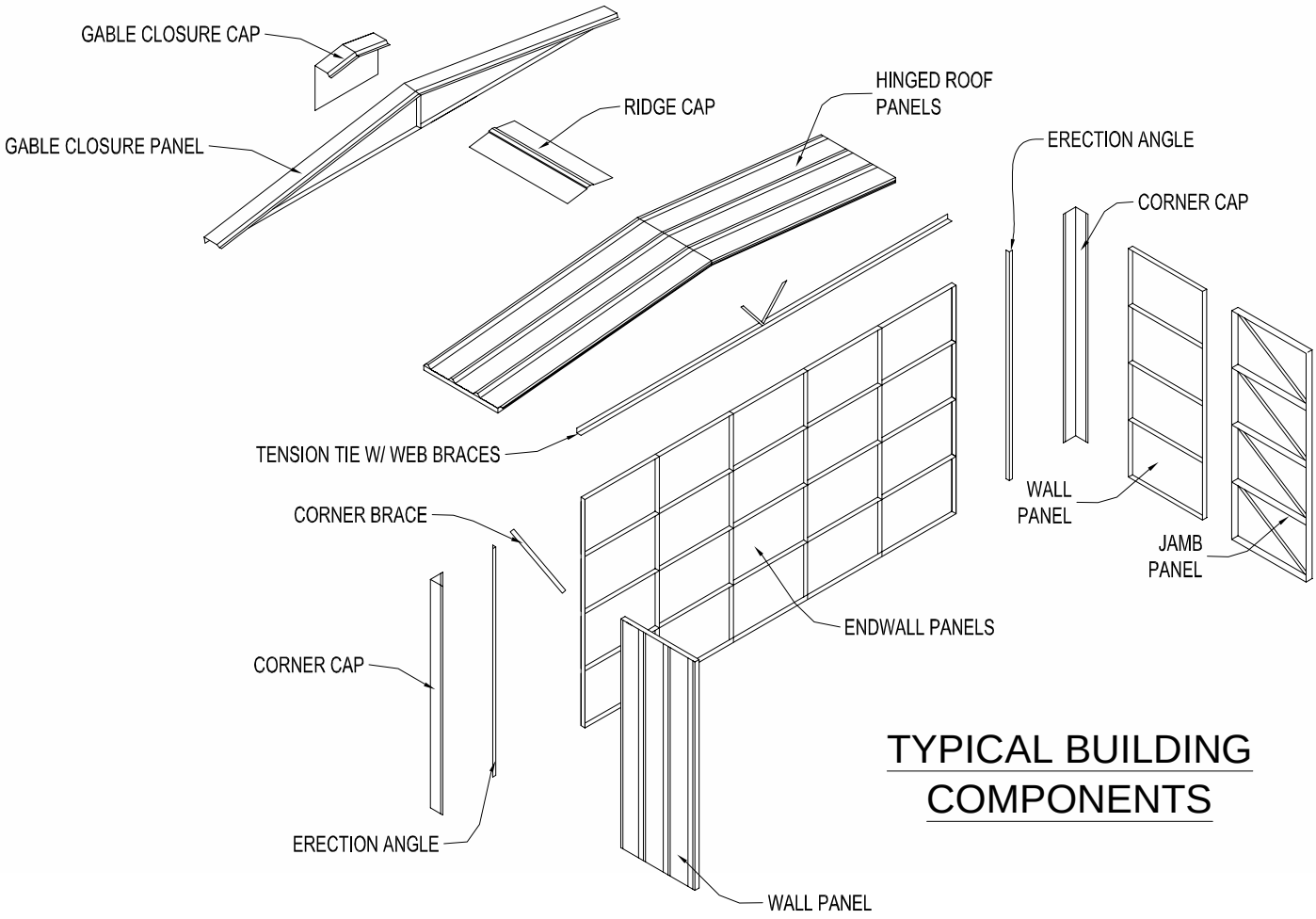


## TYPICAL BUILDING COMPONENTS


Copyright 2026 Kelly Group, Inc.

Pre-framed, modular building panels for the smaller 2:12 pitch trussed roof buildings up to 24' wide are fabricated using 2" A529-50 steel angle. Taller wall panels will use angle/channel construction or are upgraded to 3" angle depending on combination of wind and roof loading. The bolting of adjacent panel members creates a combined member and is the basis for the structural system.

The basic structural system for snow and roof loads is the truss system in the roof and the vertical members in the sidewall panels. There are roof trusses every 3'-0" on center down the length of the building. The top chord of the truss is formed by the combined member of two adjacent hinged roof panels. A tension tie spanning from eave to eave forms the bottom chord. Web bracing finishes the truss structure. Refer to page 5 for the Small Building Component Parts diagram. Snow load on the roof is transmitted through the roof truss to the sidewall panel vertical members. The sidewall panel members transmit this load to the foundation as a "gravity" load.

The basic structural system for wind and seismic resistance in the small trussed roof buildings is the shear strength created in the plane of the roof and walls. The shear strength refers to the ability of the wall or roof panel to resist loads parallel to the panel. Wind load against a wall of the building is resisted by the roof and the adjacent wall. For example, wind against the sidewall of the building is transmitted through the roof to the endwalls. The shear strength of the endwall transmits the load to the foundation. Buildings with higher seismic requirements will include "braced" wall and roof panels to resist seismic forces.

The shear strength of the 2" wall panels has been thoroughly tested, and the results are used in the design and layout of buildings. The width, length and height of the building and the design loads for the building's location will result in a certain number of "clean" panels required in each wall to resist those loads. Clean panels refer to panels that are not interrupted by personnel doors, equipment doors, windows or large openings. A Kelly representative will work with you to determine a building layout that will meet your needs.



WALL PANEL SHEAR STRENGTH TESTING
(Conducted at the Kelly Klosure facility in Fremont, NE)

Design allowable shear loads were developed using a safety factor of 2.5 below the "loss of weather-tight" load which is much more conservative than the wall panel's "ultimate load".

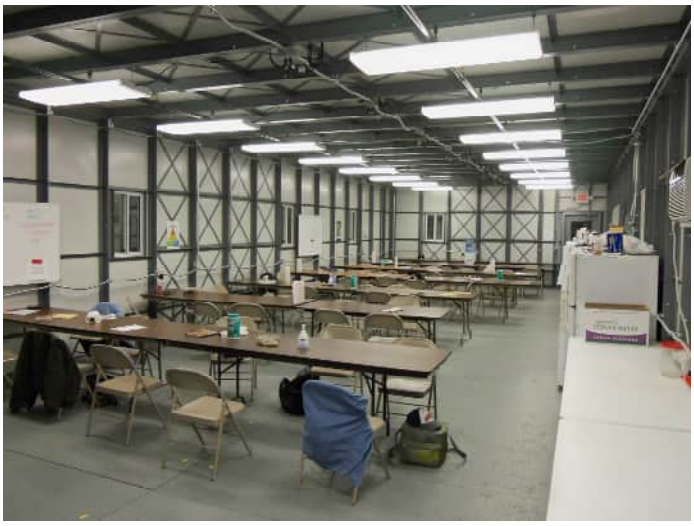

BRACED WALL PANELS IN A 2-STORY FLAT ROOF INTERIOR OFFICE AND BREAK ROOM BUILDING
(Building shown being assembled at customer's facility on a steel skid)


Copyright 2026 Kelly Group, Inc.

Kelly's larger buildings use a 4:12 pitch gable roof structure with one of two structural systems:

- Trussed roof with shear walls
- Repetitive moment frames with knee and ridge braces

The gabled moment frames with knee and ridge braces is the standard framing system. It has the most interior clear height and because of the repetitive individual frames, can be used to make a theoretically infinite length building.

The trussed roof and shear walls configuration is an alternate method of framing the larger buildings. It is often used in cases where knee braces interfere with the building use or where very high design (wind & snow) loads make the knee and ridge brace configuration impractical.

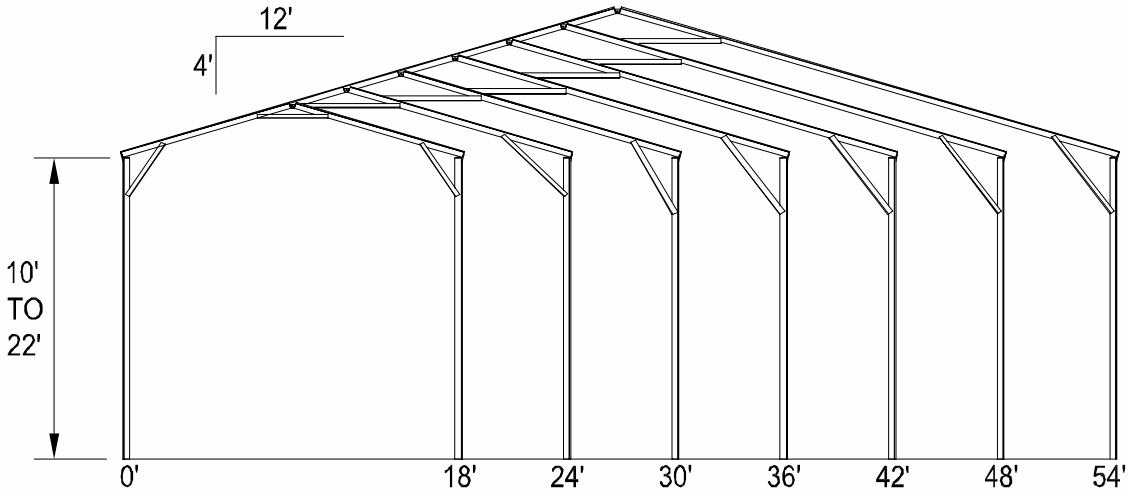


Large Buildings Pre-Engineered Sizes
(Repetitive Moment Frames Shown, Custom Sizes Available)



54' Wide Building
Using Trussed Roof Structure



42' Wide Building
Using Repetitive Moment Frames (Knee and Ridge Braces)


Copyright 2026 Kelly Group, Inc.

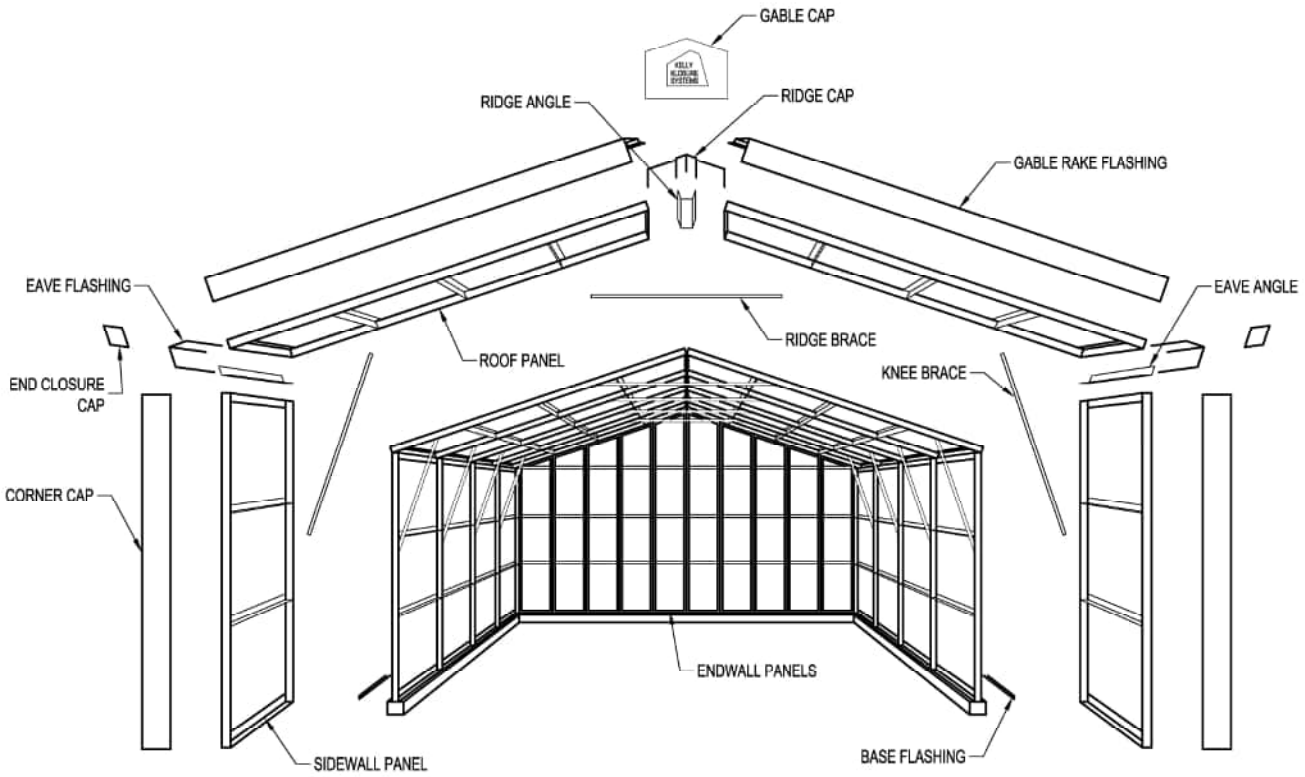


**Repetitive Moment Frame Buildings** - Component Parts

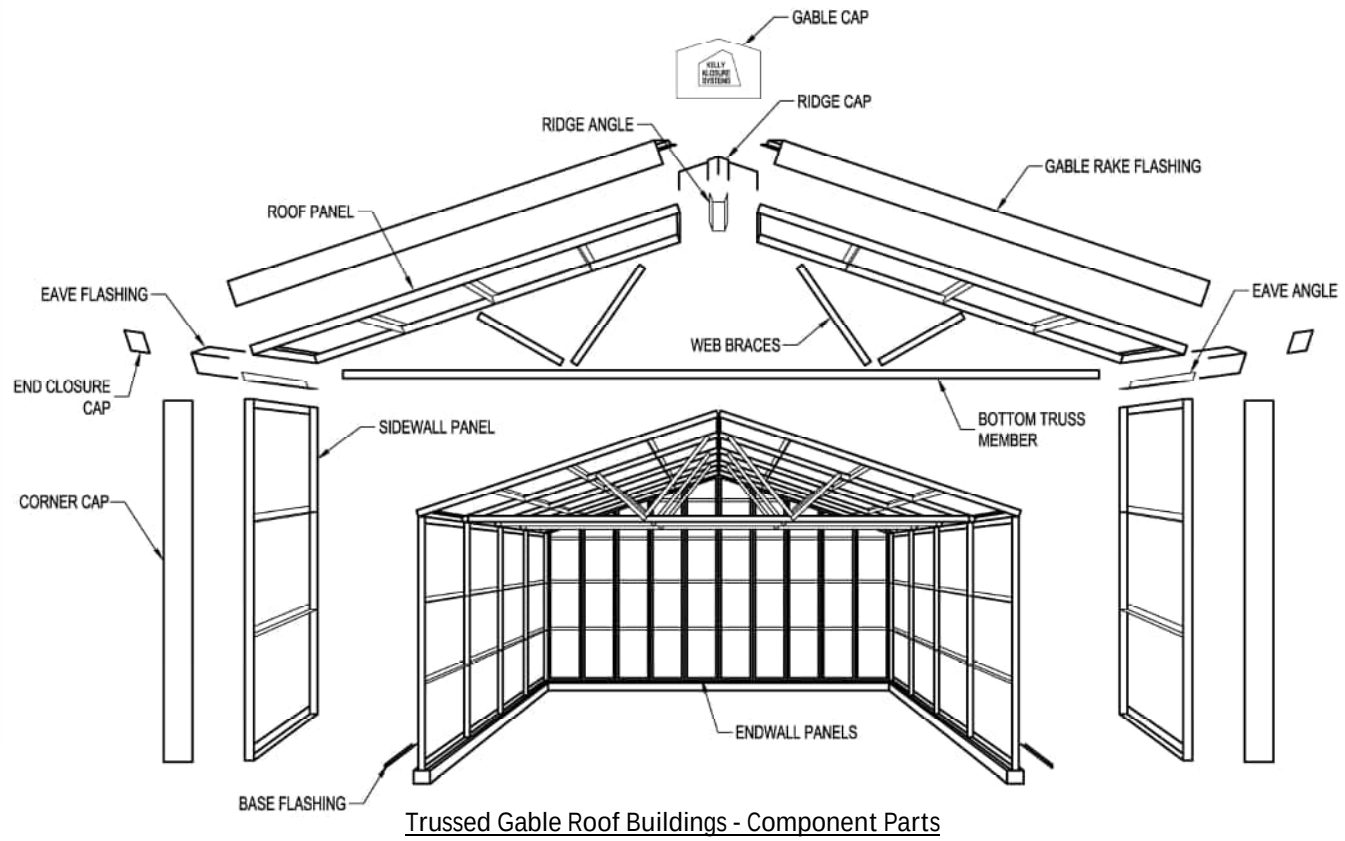


Trussed Gable Roof Buildings - Component Parts



Copyright 2026 Kelly Group, Inc.

The primary load-resisting element used in the structural design of larger Kelly Klosure buildings is a moment frame created by the hot rolled angle/channels forming the long sides of each wall or roof panel and supplemental pin connected knee and ridge braces as illustrated. Therefore, sidewalls and roof panels form the structural backbone or spine of Kelly's larger "repetitive moment frame" 4:12 pitch gable buildings.

Wall and roof panels are constructed from high-grade hot-rolled structural angle and/or channel shapes. Panel sizes range from 3" angle and channel up to 5" angle and channel for our standard pre-engineered building sizes. For custom or heavily loaded structures, 6" channel can also be used as the panel frame member. Equipment door jambs and base channels (for temporary foundations) can use up to a 12" steel channel or tubing depending on the need.

The connection of wall and roof panels at the eave and ridge and the bolted knee and ridge braces create pinned base moment frames spaced at the joint of every 3' wide panel with the next adjacent panel. Their base reactions are therefore delivered at 3' intervals. This makes the uniform foundation loads like those created by tilt-up concrete or masonry load bearing construction, except Kelly building panel loads are lighter. In other words, the structural system foundation requirements are simpler because Kelly Klosure structures transfer relatively uniform loads around the perimeter – not heavy point loads – to their foundations. Large rigid frame point loads are typical of conventional pre-engineered metal buildings. Kelly building's foundation design loads are relatively light even for the tallest, most heavily loaded structures.

The repetitive moment frames on 3'-0" centers also allow for a Kelly building to be of theoretically infinite length.

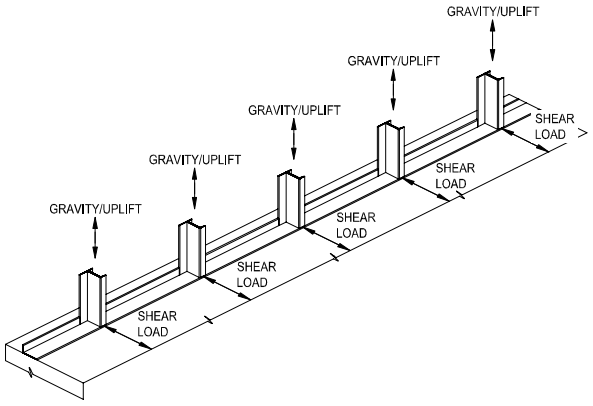


Base Reactions at Sidewall of
Building with Repetitive Moment Frames

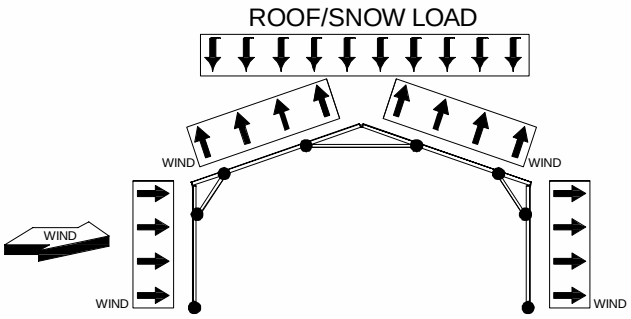


Building Reacting to Wind & Snow Loads
Showing the Pinned Moment Frame


Copyright 2026 Kelly Group, Inc.

In addition to Kelly Klosure's wide range of pre-engineered building options, there are many custom engineered options available.

**Examples of Custom Engineered Configurations:**

- Single Slope (Shed) Roof Buildings
- Lean-To Structures
- Custom Roof Pitch Gable Buildings

These custom configurations are designed on a case by case basis to the IBC 2021 building code. For Lean-To type structures in areas with snow loading, the drift load caused by the adjacent structure will be taken into account.

These simple span type structures will generally be able to span up to 24' wide and will have a minimum roof pitch of 2:12.

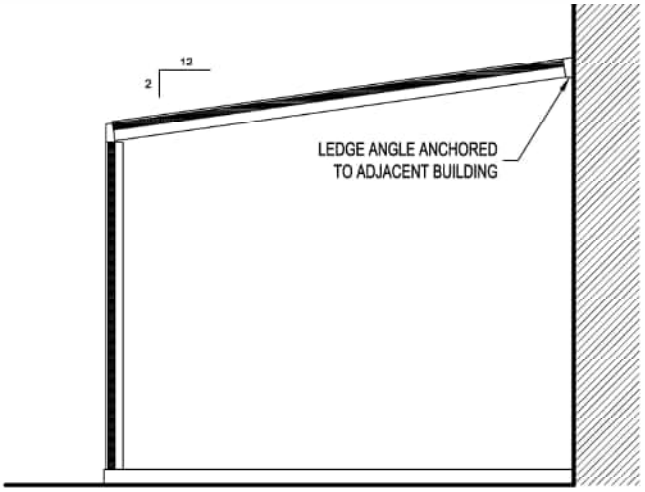


Lean-To Structure with the
Roof Being Supported by an Existing Structure



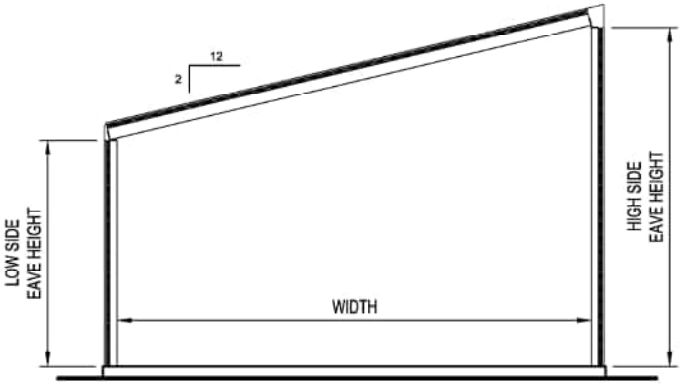


Single Slope Structure
using Shear Walls in Lieu of Knee Braces




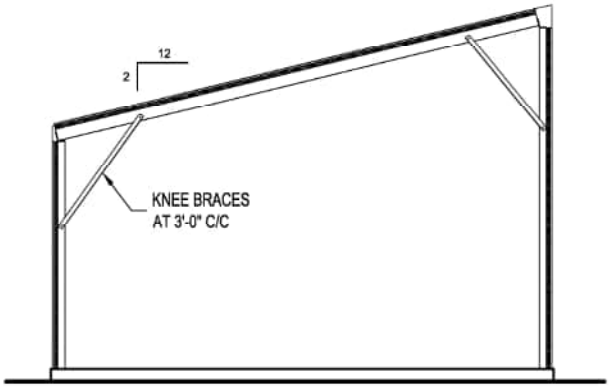


Single Slope Structure
with Knee Braces


Copyright 2026 Kelly Group, Inc.

For interior applications, Kelly Klosure has a full line of flat-roof structures to suit temporary and permanent needs.

Standard Features:

- Clear Span Widths up to 30'Wide, Columns Supports for Wider Structures
- Permanent Structures Designed to IBC 2021
- Smaller Temporary & Relocatable Structures use the Patented Kelly Locking Key for Quick Assembly and Disassembly

Examples of Flat Roof Enclosure Uses:

- Temporary Break Rooms and Offices for Power Plant Outage Support
- Permanent Offices and Break Rooms
- 2-Story Look-Out Buildings
- Refuel and Turbine Deck Enclosures for Nuclear Power Plants
- MCC and Exciter Equipment Enclosures
- Combined with PK Structures Mezzanines to Create 2nd Floor Offices and Break Rooms







2-Story Office and Break Room Building



The Kelly Klosure "Locking Key" Can Be Used Where Possible In Lieu of Bolts in Temporary Use Structures For Faster Assembly and Disassembly



Copyright 2026 Kelly Group, Inc.

Kelly Klosure's Trussed Roof System can be installed on a simple rigid frame support structure to create canopies, roof systems and buildings with one or more open walls.

Kelly's roof systems can be designed with two basic structure types:

- Simple eave support columns and beams where the column foundations resist lateral (wind ) loads.
- Full rigid frames with simpler foundation requirements and the ability to resist high seismic loads.

Roof System Standard Features:

- 2:12 Pitch Trussed Roof (Up to 24' Wide)
- 4:12 Pitch Trussed Roof (Up to 54' Wide)
- Red Primer Finish on All Structural Steel
- Galvalume or Painted Roof and Trim Finish
- Hot-Rolled Wide Flange Beam and Square Tube Column Support Structure
- Easy Bolt-Together Installation

**Optional Features:**

- Hot-Dip Galvanized Structural Steel and Panel Frames for Superior Corrosion Resistance



Canopy at County of Henrico, VA Maintenance Yard



Passenger Walkway Cover
at Pittsburgh International Airport

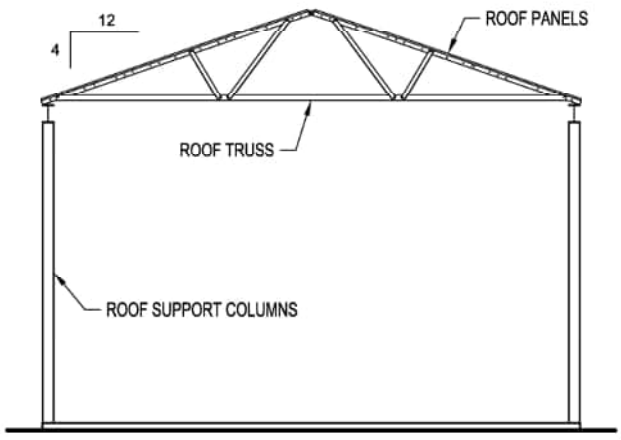


Canopy Cross Section with
Simple Eave Support Columns & Beams



Water Point Canopy at Fort Devens, MA


Copyright 2026 Kelly Group, Inc.

Roof loads are typically governed by snow loads and are established by local building officials. Snow loads are given in terms of the Ground Snow Load. The actual snow load used for building design is determined by applying Code-prescribed load formulas given the Ground Snow Load and building characteristics. For the design tables developed for Kelly buildings, ASCE 7-16 was used to determine the design loads. ASCE 7-16 is a document issued by the American Society of Civil Engineers and is referenced by several model building codes, including the International Building Code.

Wind loads on buildings are typically established by local building officials and are given in terms of Basic Wind Speed (BWS). The BWS, along with other parameters, are applied to Code-prescribed load formulas to determine the design wind pressures for buildings. ASCE 7-16 was used to determine the design wind pressures.

Seismic Design of buildings is governed by the requirements of ASCE 7. Seismic Category (from A to F) is assigned to a given building application depending on the seismicity of the site, the soil condition at the site, and the properties of the building. Due to the lightweight construction of the Small Span building, seismic lateral loads rarely govern over lateral wind loads, but in higher seismic design categories (D, E and F), steel detailing requirements can affect the design of the building. Kelly Klosure buildings can be designed to conform to the seismic requirements of almost any site.

Building codes use Importance Factors to increase the load capacity of buildings in critical applications such as hazardous waste storage, emergency power enclosures and water treatment facilities. The IBC 2021 building code uses Risk Categories to figure the Importance Factors, the standard being Risk Category 2. Kelly buildings are quoted as Risk Category 2 unless otherwise specified by the customer.

Professional Engineering Services:
Kelly Klosure Systems buildings are professionally engineering by registered structural engineers. Engineer stamped drawings, design certificates or complete structural calculations are available at an additional charge. Complete foundation design services are also available. Kelly Klosure can provide stamped drawings and calculations for all 50 states as well as the Canadian Provinces of Alberta, Manitoba, Saskatchewan, and British Columbia.

**Base Reactions:**
Due to the many variables that affect the base reactions of a Kelly Klosure building, no simple method of determining the specific reactions of a building is available for this guide. Base Reactions or Anchor Bolt Reactions are available for your specific building upon request to assist in your foundation design.

Building Code:
Kelly's pre-engineered system is designed for the latest building code, the 2021 International Building Code or IBC 2021. The 2:12 pitch trussed roof framing system has been designed for loads up to 150 MPH wind and 50 PSF snow. This will allow this economical building design to be used in the vast majority of locations throughout the country. However, if a building is required to meet loads beyond those listed, Kelly Klosure will recommend a 4:12 pitch building in lieu of a 2:12 pitch. The 4:12 pitch gable buildings with roof trusses or repetitive moment frames have been designed for loads in excess of 180 MPH wind, and 100 PSF Snow.

Trussed Roof & Flat Roof Structure Limits:
Buildings with the trussed roof systems, flat roofs or other structures without the repetitive moment frames rely on the shear strength of each wall to resist wind loads, therefore there are limits to the length of a building compared to its width. As a general rule, the 4:1 ratio of length to width is the limit to a these building's size. When a building's length is over twice the width, there may be limits as to the number of openings or doors that are possible in the endwalls. Panel construction, wind load, eave height and seismic design category are some of the variables that affect a trussed building's maximum length and restrictions on endwall openings. For this reason, there is no way to produce simple charts stating these restraints; however a Kelly Klosure representative will help with creating a layout that fits your needs and meets the required building design loads.

*Note: When a building is required that exceeds the trussed roof length limits, a 4:12 pitch gable building with repetitive moment frames is recommended. These buildings with knee and ridge braces can achieve a theoretically infinite length.*


Copyright 2026 Kelly Group, Inc.

Kelly Klosure buildings have a very uniform load around the perimeter that the foundation needs to resist. This allows for a simpler continuous footing instead of large periodic column piers needed for conventional buildings. There are three standard conditions for Kelly buildings being installed on concrete:

- New Thickened Edge Slab
- New Trench Wall / Grade Beam
- Existing Concrete Slab or Foundation

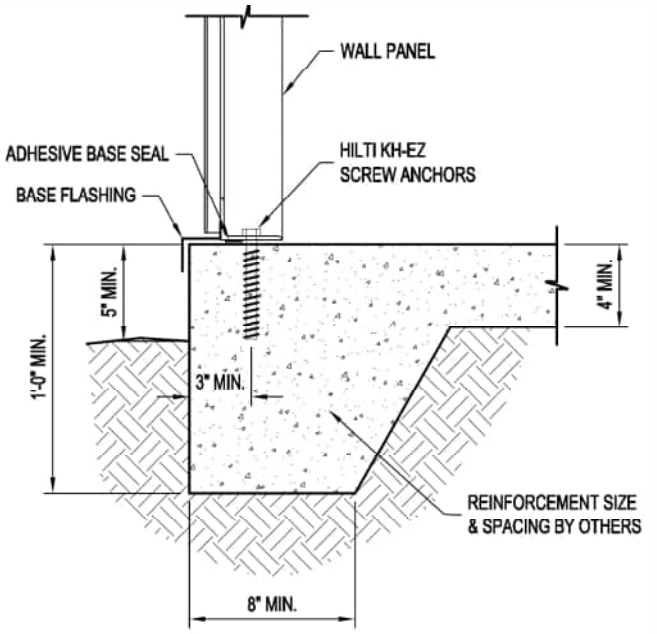


**Typical Thickened Edge Slab Foundation Section**

This **Thickened Edge Slab Foundation Option** is commonly used in warm weather regions when the intended use of the System 2 structure requires a slab anyway.

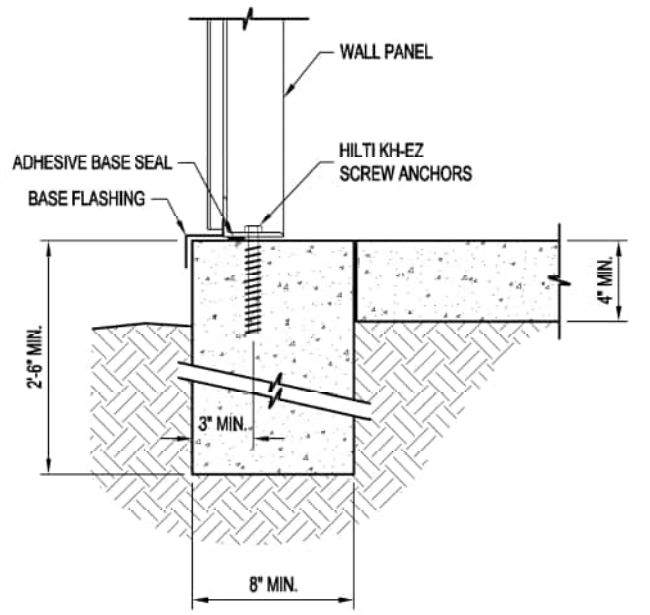


**Typical Trench Wall Foundation Section**

This **Trench Wall Foundation Option** is typically used with or without an adjacent interior slab in cold weather areas where frost heave is a concern.

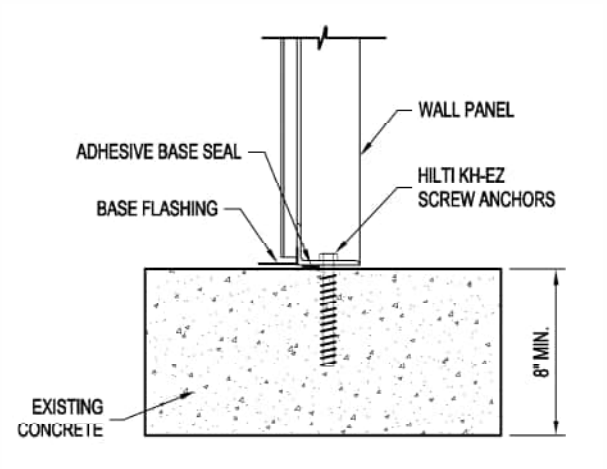


**Typical Existing Slab Foundation Section**

This **Existing Slab Foundation Option** has been successfully used to support System 2 buildings on existing roadways and runway slabs in warm weather regions.


Copyright 2026 Kelly Group, Inc.

Kelly Klosure supplies Hilti Kwik HUS-EZ concrete screw anchor as the standard method of anchoring to a concrete foundation. These anchors are a high performance post installed anchor and have the following advantages:

- Anchor bolt pre-setting not required, anchors are installed as the building is erected.
- Hiti KH-EZ screw anchors are tested and approved in cracked and un-cracked concrete, a requirement of the IBC 2021. (Tested per AC193)
- Hilti anchors install with standard size drill bits (3/8", 1/2" or 5/8" depending on anchor diameter).
- Anchors install in a fraction of the time of wedge style expansion anchors.
- Less spacing and edge distance requirements compared to expansion anchors allowing for smaller foundation requirements.
- Anchors are manufactured from carbon steel, are heat treated and zinc plated per ASTM B633.



Drill Anchor Holes Through Panel Frames





Install Anchor with Impact Wrench


Copyright 2026 Kelly Group, Inc.

Because of a more uniform load around the base of the building, temporary foundations are possible on Kelly buildings . The unique temporary foundation options shown here have been successfully used in numerous projects. Some were sold as a special feature with Kelly Klosure buildings, others were fabricated locally by the customer. In all cases, a Kelly technical representative provided design input. These options allow a temporary or special use building to be quickly installed on existing conditions without having to pour a new concrete foundation.

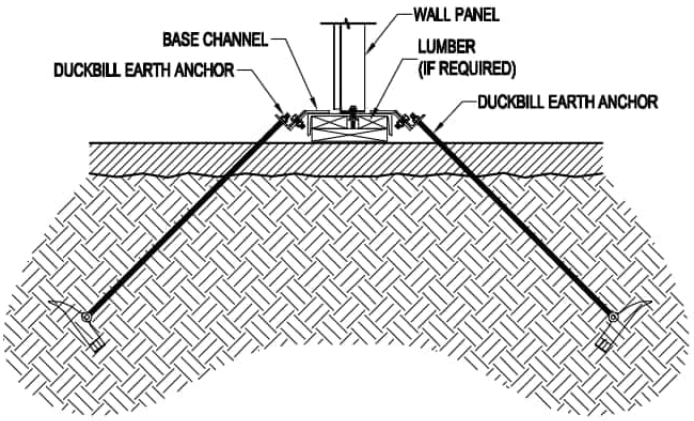


Steel Base Plate and Earth-**Anchor Tie Down Foundation**

Used for small and large buildings on existing grade enabling the building to withstand basic wind and snow loads.

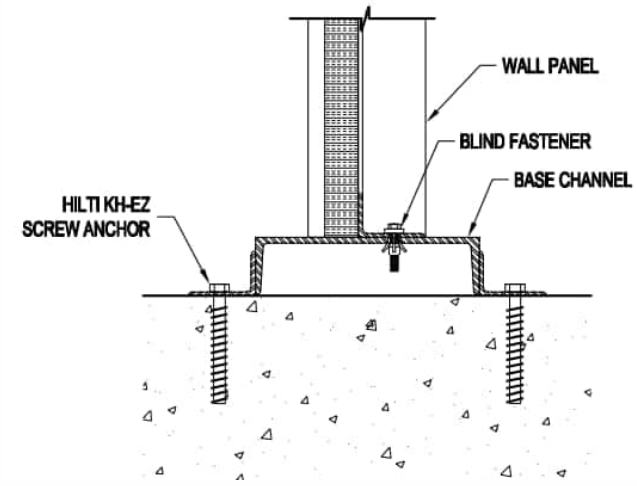


**Steel Base Plate Anchored to Existing Slab**

Used for buildings that are installed on uneven existing concrete or for frequently crane lifted buildings.



Building Installed on Existing Un-level Asphalt Surface Shimmed with Treated Wood Lumber



Building Installs on Base Channel Similar to Installation on New Concrete



Finished Temporary Vehicle Inspection Enclosure for U.S. Customs and Border Patrol


Copyright 2026 Kelly Group, Inc.

Manta Ray earth anchors by Maclean Civil Products are driven tipping plate soil anchors for reaction of tensile loads. Manta Ray anchors have ultimate capacities up to 20 tons. After driving the anchor to the required depth, the driving tool (called drive steel) is removed. The anchor is then tipped and proof tested with Maclean's Anchor Locking Kit from its edgewise driving position to present its bearing area to the soil. This is called "load locking", and provides an immediate proof test of each anchor.

Manta Ray anchors offer many significant advantages:

- Fast, easy installation
- Immediate proof test results
- No grout
- Inexpensive installation equipment
- Environmentally friendly
- No excavation required

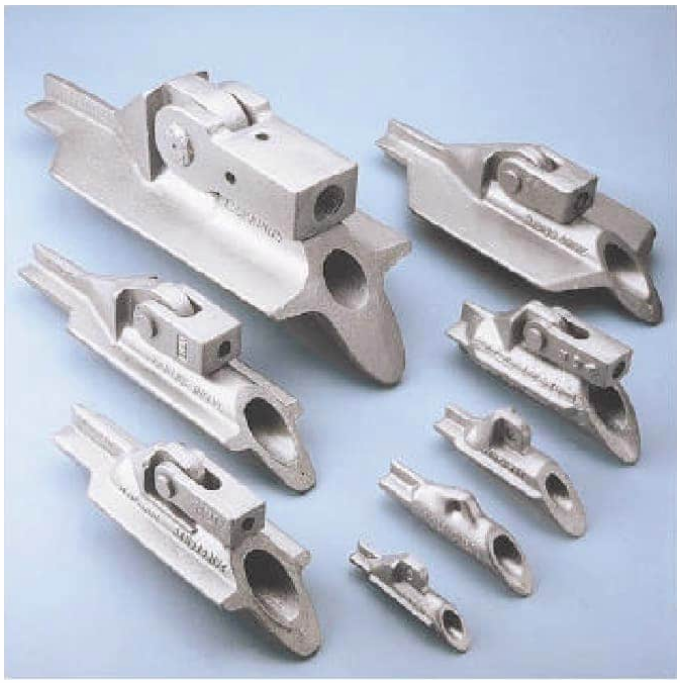

Manta-Ray Earth Anchor Heads

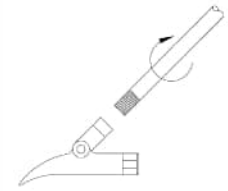

1. Thread anchor rod into manta ray



2. Insert drive steel into anchor

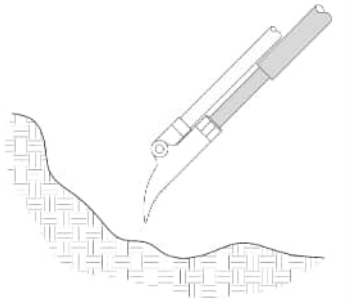

3. Position anchor at proper location and angle

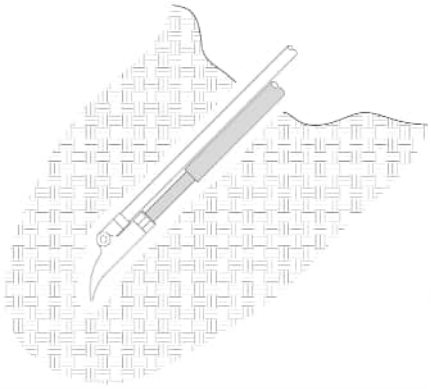

4. Drive anchor to proper depth

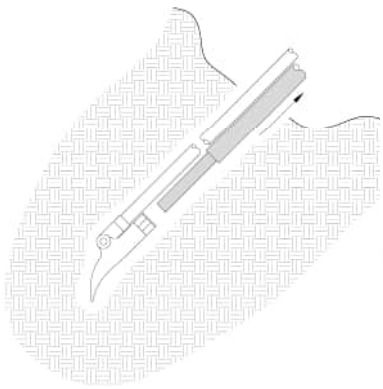

5. Remove drive steel

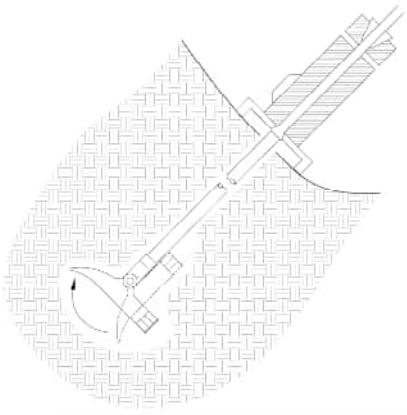

6. Use load locker to proof anchor into load lock position

Earth Anchor Installation Procedure



Copyright 2026 Kelly Group, Inc.

The Kelly Klosure pre-framed modular panel has 4 components that are factory finished to create an easy and versatile bolt-together system in the field.

- Steel Panel Frame
- Exterior Steel Sheeting
- Optional Rigid Insulation
- Optional Steel Insulation Liner

The following pages will detail the standard components and options for the Kelly modular panel.





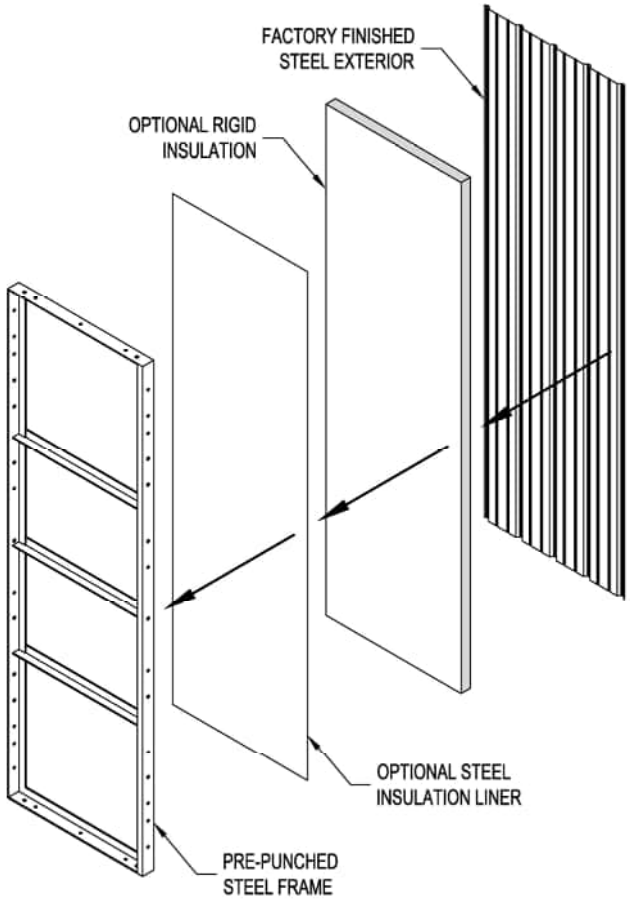


The Kelly Klosure Pre-Framed Modular Panel

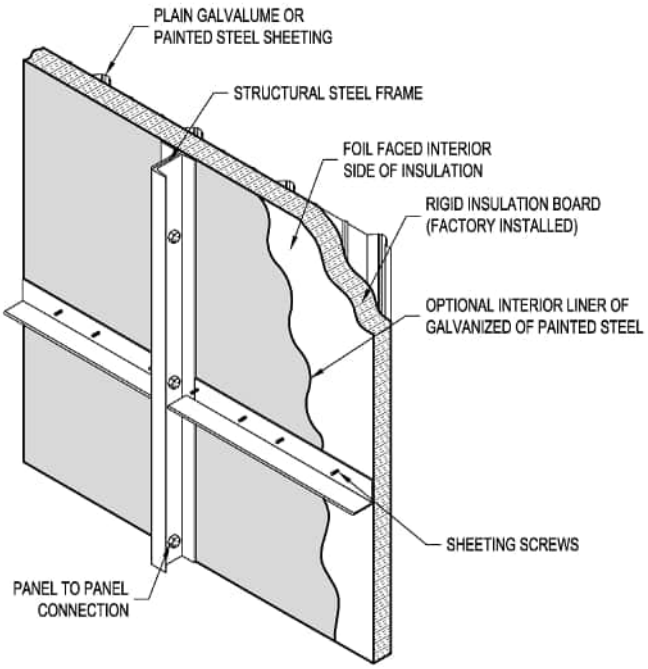


Panel Components



Copyright 2026 Kelly Group, Inc.

The basis of a Kelly Klosure building is its high quality steel frame. The modular panel frame is fabricated from high grade steel that is precision cut, punched and welded by highly skilled workers.

Panel Frame Features:

- Steel is high grade A529-50 (50 KSI) steel rather than the industry standard A36 (36 KSI)
- Hole punching is precisely done and routinely factory quality checked
- Welding is performed by certified welders
- Panel frames are ground after welding to remove any sharp edges for safety in the field



Kelly Klosure keeps over 600,000 pounds of steel in stock to be able to react quickly to customer's needs.



Panels are welded in precise jigs by certified welders to ensure dimensional quality and structural strength.



Steel members are factory punched with the highest accuracy to allow for easy bolt-together installation in the field.



Copyright 2026 Kelly Group, Inc.

The steel panel frame is factory coated to prevent corrosion during shipping, installation and building use. After the panel frames are welded, they are ground to remove sharp edges, washed with an environmentally safe iron phosphate wash and pretreatment then coated.

**Panel Frame Coating Options:**

- Standard: Red or Gray Primer
  Sherwin Williams Modified Universal Primer is an advanced technology, self-crosslinking alkyd primer. This finish is designed to be an economical one coat finish that will prevent corrosion during shipping, installation and normal indoor exposure. It has a high gloss finish and excellent corrosion protection and durability. It is not an exterior grade coating and will not hold up in highly moist or corrosive environments.
- Optional: Enamel
  Sherwin Williams KEM AQUA 8710 is a water-reducible, alkyd enamel top coat. It has a high sheen and is durable against wear and abrasion. However, it is not designed to be used in outdoor or highly corrosive or moist applications. It is available in standard medium gray, or custom colors.
- Optional: Hot-Dip Galvanized
  Kelly Klosure has access to a hot-dip galvanizing facility with capacity for 60' long material. Even the largest of Kelly Klosure structures can be hot-dip galvanized for superior long-term corrosion resistance in the harshest of environments. This is Kelly's highest offering in terms of long lasting frame coatings and is recommended for projects looking for a maintenance free finish on structural steel in moist, coastal or harsh environments.
- Other options such as powder coating and epoxy painting are available upon request.



The Standard Red Primer Being Applied

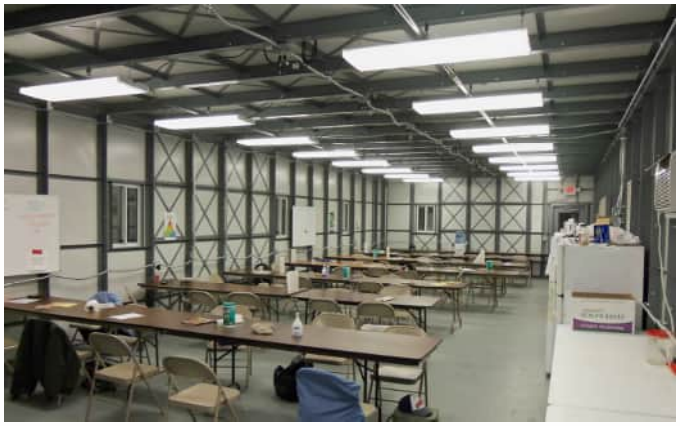

Building with Gray Enamel Painted Framing



A Building's Interior with Hot-Dip Galvanized Frames in the Gulf Coast Region


Copyright 2026 Kelly Group, Inc.

The exterior steel sheeting on a Kelly building is fully supported around the perimeter of the panel and at intervals of approximately 3'-0" down the length of each panel. Kelly buildings rely more on the strength of the panel frame and less on the exterior sheeting providing a stronger wall and roof surface resistant to snow and storm damage.

Conventional steel buildings do not support the overlap joints and use support spacing of 4'-0" or more relying more on the strength of the sheeting to span between supports set further apart.

Kelly buildings are available with two different types of factory applied exterior sheeting:

- Standard: 3/4" Rib

  - Kelly's standard exterior designed for easy installation and reusability

  - 80,000 PSI steel

  - No seal tape or stitch screws required

  - 29 gauge standard or 26 gauge

- Optional: 1 1/4" PBR Rib

  - Optional profile used in high wind and snow load applications or at customer's request.

  - 50,000 PSI minimum steel

  - Lap seal tape and stitch screws required

  - 26 gauge or 24 gauge

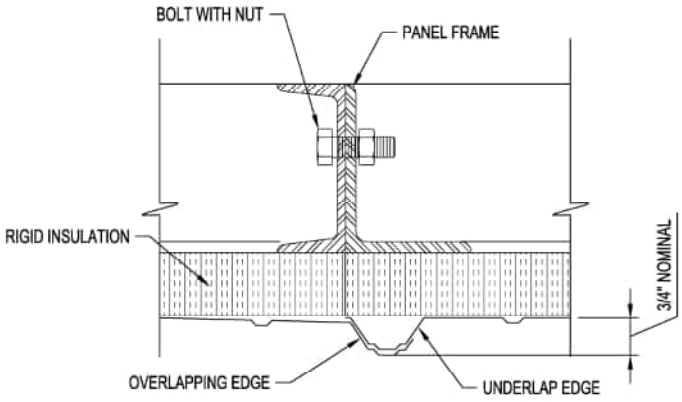


Panel to Panel Connection Detail
Standard 3/4" Imperial Rib

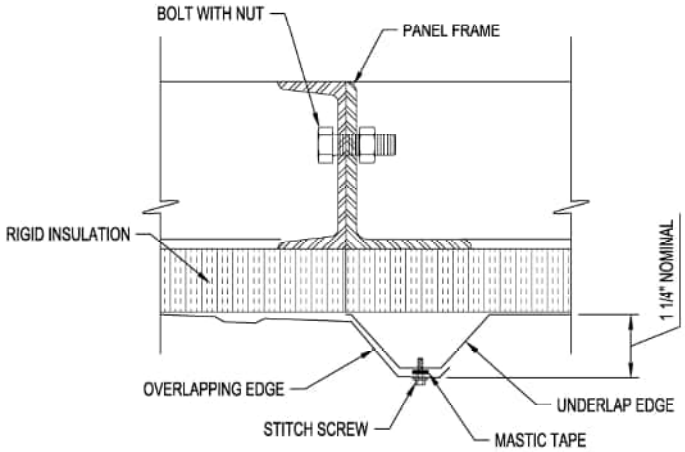


Panel to Panel Connection Detail
Optional 1 1/4" R-Panel

| | 29 Gauge | 26 Gauge | 24 Gauge |
|---|---|---|---|
| 3/4" Classic Rib: | PG / SMP | PG / SMP | N/A |
| 1-1/4" R-Panel: | N/A | PG / SMP | PG / Kynar |

PG: Plain Galvalume Finish (25 Year Finish Warranty)
Galvalume is a zinc and aluminum coating that out performs straight galvanized material. This is the most economical finish for Kelly buildings.

SMP: Silicone Modified Polyester (40 / 30 Year Finish Warranty)
Galvalume coated base metal with epoxy modified primer and 30% silicone modified polyester top coat. This is the standard painted finish for System 2 buildings.

Kynar: Two-Coat Flouropolymer Paint System (40 / 30 Year Finish Warranty)
Galvalume coated base metal with PolyVinylidine DiFlouride (PVDF) paint system. Kynar is an alternate painted finish that is used at the customer's request.


Copyright 2026 Kelly Group, Inc.

For climate controlled buildings, Kelly Klosure offers the highest performance rigid insulation as a factory installed option.

- **Factory Installed Rigid Polyisocyanurate**

  Polyisocyanurate is Kelly's standard factory installed insulation. It is a high performance insulation with good burning characteristics compared to other rigid foams. It is approved for use as an exposed insulation in most applications.

  Our rigid insulation is composed of a Class A closed cell polyisocyanurate (polyiso) foam core faced with a reflective 12 mil reinforced foil facer on one side and a white 12 mil reinforced acrylic-coated aluminum facer on the other.

. Properties:

  Flame Spread (ASTM E84): 25 or less
  Smoke Developed (ASTM E84): 450 or less
  Service Temperature: -100°F to +250°F

  Standard Thicknesses for Roof and Walls:

  - 2" R-13 (U Value = 0.076)

  - 3" R-20 (U Value = 0.05)

  Optional Thicknesses for Roofs:

  - 4" R-27 (U Value = 0.037)

  - 5" R-34 (U Value = 0.029)

- **Factory Installed Mineral Wool**

  Mineral wool is an optional factory installed insulation used in applications where 100% non-flammability is more critical than thermal efficiency.

  Semi-rigid thermal insulation manufactured from felted mineral wool bonded together with a high temperature binder.

  Properties:

  ASTM E136: **Non-Combustible**
  Flame Spread (ASTM E84): 0
  Smoke Developed (ASTM E84): 0

  Standard Thickness:

  2" R-8 (U Value = 0.125)



Panel with Polyisocyanurate Insulation

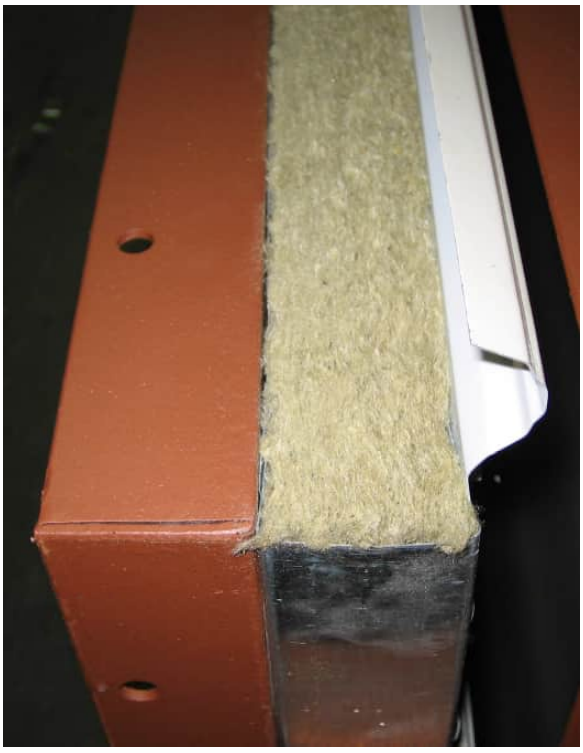

Panel with Mineral Wool Insulation



Copyright 2026 Kelly Group, Inc.

To protect the factory installed insulation, Kelly Klosure installs a flat steel insulation liner factory installed between the steel panel frame and the insulation.

- Painted Steel Liner

  29 ga. steel, Galvalume coated, silicone modified polyester paint finish

  Kelly's upgraded interior liner can be coordinated with matching or accent colored painted steel frames to create an attractive interior finish without needing to install drywall.

  Standard Color: White



Painted Steel Liner
White painted steel liner with panel frames painted to match.



Painted Steel Liner
White painted steel liner with panel frames painted with gray primer.


Copyright 2026 Kelly Group, Inc.

One of the key differences of a Kelly Klosure building are its factory installed components that save labor and cost during installation. The following items are factory installed in the modular wall or roof panels at the Kelly Klosure factory ensuring quality without the need for additional installation time in the field.

**Available factory installed components:**

- Personnel Doors
- Windows
- Light Transmitting Roof Panels
- Louvers & Other Ventilation Openings
- Framed Openings for Wall-Mount and Thru-Wall HVAC units
- Framed Openings for Duct, Electrical or Pipe Penetrations
- Custom Notched or Framed Panels to Fit Existing Pipes or Other Obstructions
- Other Custom Features as Needed



Endwall Being Set with Factory Installed Personnel Door, Louvers and Equipment Door Supports



Building with Factory Installed Windows

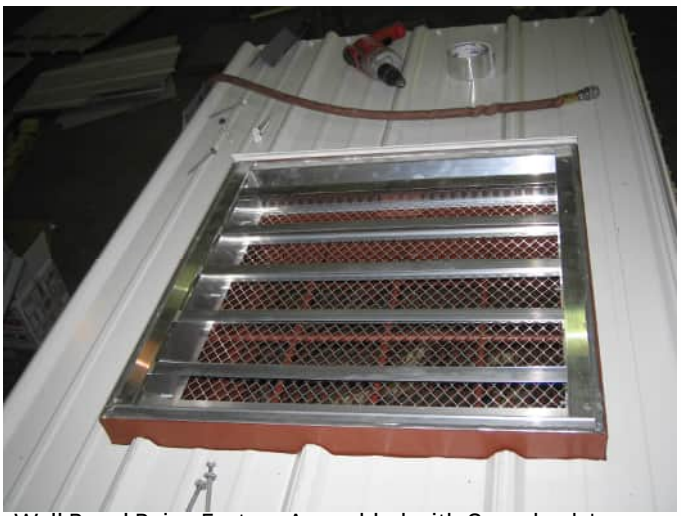

Wall Panel Being Factory Assembled with Greenheck Louver and Welded Steel Security Bars


Copyright 2026 Kelly Group, Inc.

Kelly Klosure's factory installed single and double personnel doors save considerable time and expertise in the field compared to traditional buildings with field hung doors. Kelly buildings ship with the personnel door frame and leaf factory installed in the wall panel plum and true.

*All that needs to be done in the field after the wall panel is set in place is to install the door closer and lockset!*

**Kelly Klosure offers two standard door sizes:**

- 3' Wide x 7' High Single Door
  - Factory mounted in a 3'-9" wide wall panel
- 5'-8" Wide x 7'High Double Door
  - Factory mounted in a 6'-0" wide wall panel

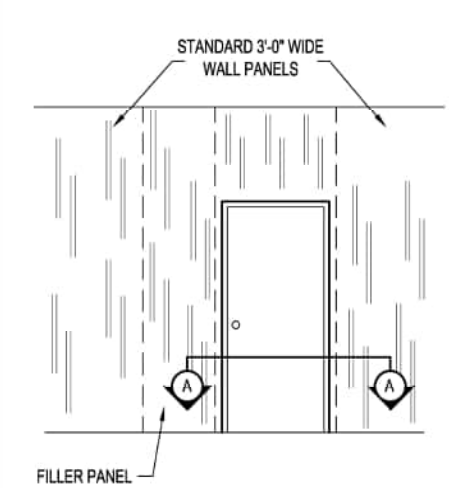


Door Panel Elevation

**Standard Door Specifications:**

(Detailed specifications and options included in the following pages)

- 16 Ga Galvanized Steel Door Frame
  - Factory welded into wall panel
- 18 Ga. Galvanized Steel Door Leaf
  - Honeycomb core with lockset prep
- Factory Applied Paint Finish
  - Primer and High Gloss Enamel
- Formed Steel Threshold
  - Keeps door panel plumb and true during shipping and installation
- (3) Ball Bearing Hinges & Door Base Sweep
- Commercial door closer & stainless steel lockset included (field installed to prevent damage)

The above door sizes and features are Kelly's standard. The following pages further detail the standard options as well as a wide range of door and hardware upgrades for a variety of uses. In addition to the large array of options shown, almost any commercial door and hardware need can be accommodated.

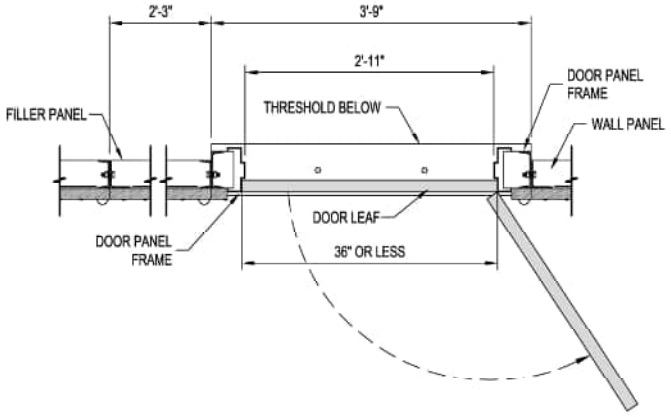


Section A-A

Cross-Section of 3'-0" Personnel Door Panel

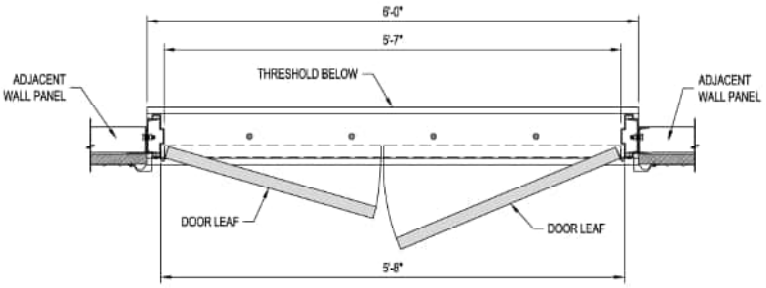


Cross-Section of 5'-8" Double Personnel Door


Copyright 2026 Kelly Group, Inc.

## Standard 3'W x 7'H Single Door Components

| | |
|---|---|
| Wall Panel | 3'-9" Wide Panel with 2'-3" Filler Panel Adjacent |
| Door Leaf | 1-3/4" Thick 18 Ga. A-60 Galvannealed Steel w/ Honeycomb Core & Lockset Prep |
| Door Frame | 5-3/4" Deep 16 Ga. A-60 Galvannealed Steel Flush Frame |
| Door & Frame Finish | Primed and Painted with High Gloss Enamel |
| Door & Frame Color | Standard Gray (Painted to match exterior sheeting or trim for an extra charge) |
| Hardware Finish | US26D (Satin Chrome) or Plain Aluminum Finish is standard depending on item |
| Hinges | Qty = 3 BEST FBB179 4.5 Ball Bearing Hinge |
| Entry Lock | S. PARKER B9160 SERIES Stainless Steel Light Commercial Entry Lock, Schlage Compatible |
| Closer | S. PARKER 954 AL Light Commercial Closer |
| Door Sweep | Pemko 345APK |
| Threshold | Standard 3/16" Formed Steel |

## Standard 5'-8"W x 7'-0"H Double Door Components

| | |
|---|---|
| Wall Panel | 6'-0" Wide Panel |
| 5870 Door Leaf-Active | 3'-0" Wide 1-3/4" Thick 18 Ga. A-60 Galvannealed Steel w/ Honeycomb Core & Lockset Prep |
| 5870 Door Leaf-Inactive | 2'-8" Wide 1-3/4" Thick 18 Ga. A-60 Galvannealed Steel w/ Honeycomb Core & Flushbolt Prep |
| Door Frame | 5-3/4" Deep 16 Ga. A-60 Galvannealed Steel Flush Frame |
| Door & Frame Finish | Primed and Painted with High Gloss Enamel |
| Door & Frame Color | Standard Grey or Custom Color |
| Hardware Finish | US26D (Satin Chrome) or Plain Aluminum Finish is standard depending on item |
| Hinges | Qty = 3 BEST FBB179 4.5" Ball Bearing Hinges per Door Leaf |
| Entry Lock | S. PARKER B9160 SERIES Stainless Steel Light Commercial Entry Lock, Schlage Compatible |
| Closer | S. PARKER 954 AL Light Commercial Closer |
| Door Sweep | Pemko 345APK |
| Flush Bolts | Rockwood 555 12" (Top & Bottom of Inactive Leaf) |
| Threshold | Standard 3/16" Formed Steel |


Copyright 2026 Kelly Group, Inc.

## Standard Upgrades for Personnel Doors and Double Doors

In lieu of Standard Entry Locks:

| | |
|---|---|
| Heavy Duty Entry Lock: | Sargent 10-Line-Series or BEST 83K |
| Heavy Duty Lever Lock: | Sargent 10-Line-Series or BEST 90K |
| Panic Hardware-3070 Doors: | Sargent 20 Series Exit Only (Light Duty) |
| | Sargent 20 Series w/ Lever Outside Entry and Lock Cylinder (Light Duty) |
| | Sargent 80 Series Exit Only (Heavy Duty) |
| | Sargent 80 Series w/ Lever Outside Entry and Lock Cylinder (Heavy Duty) |
| Panic Hardware- | Sargent 20 Series Vertical Rod Exit Only (Light Duty) |
| 5870 & 6070 Double Doors | Sargent 20 Series Vertical Rod , Lever Outside Entry and Sargent Lock Cylinder (Light Duty) |
| Single Active Leaf Only | Sargent 80 Series Mortise Exit Only (Heavy Duty) |
| | Sargent 80 Series w/ Lever Outside Entry and Lock Cylinder (Heavy Duty) |
| Panic Hardware- | Dual Sargent 20 or 80 Series Vertical Rod Type Panic Hardware w/ Lever Outside Entry |
| 5870 & 6070 Double Doors | and Lock Cylinder (Heavy Duty, Installed on Both Leafs for a Double Active Door) |
| Double Active Leafs | |

Lock Cylinders: Unless specified, panic hardware is supplied with a Sargent lock cylinder.
Best Lock cylinders or other brands and types can be supplied on all panic hardware if required.
Note: BEST Lock cylinders are supplied WITHOUT the actual lock core. Core is by others.

In lieu of Standard Hinges:

Hinges: Qty = 3 FBB191 NRP US32D
Heavy Duty Bearing, Stainless Steel with Non-Removable Pin

In lieu of Standard Closer:

Closer: PDQ American Eagle 7101BC

Weather Stripping: Pemko 303APK Aluminum w/ rubber bulb seal

Door Leaf: Upgrade to Polystyrene Insulated Core (R 2.0 per ASTM C1363)

Miami-Dade Hurricane Rated or UFC 4-010-**01 Anti**-Terrorism Doors are the same Standard Doors Except:

| | |
|---|---|
| Door Frame: | Upgrade to 14 Ga. A60 Galvannealed Steel |
| Door Leaf: | Upgrade to 16 Ga. A60 Galvannealed Steel w/ Honeycomb Core |
| Entry Lock: | Heavy Duty Sargent 10-Line Lever Lock |
| Hinges: | Qty. = 3 FBB191 NRP US32D per Leaf |
| Closer: | American Eagle 7101BC |


Copyright 2026 Kelly Group, Inc.

Kelly Klosure buildings are available with various types of factory installed windows. The windows are factory flashed and sealed to give a finished window opening without need for additional field work during building installation.

**Standard Window Options:**

- 2' Wide x 3'High Vinyl Horizontal Sliding Window
  - Insulated Glass, White Vinyl Frame
  - U-Value: 0.29 Solar Heat Gain: 0.22
  - Visible Light Transmittance: 0.51
- 2' Wide x 3' High Aluminum Sliding Window
  - Insulated Glass, White Painted Aluminum
  - U-Value: 0.38 Solar Heat Gain: 0.24
  - Visible Light Transmittance: 0.54

**Upgraded Window Options:**

- Custom Sized Fixed or Sliding Window Units in Vinyl or Aluminum Frame
- 2' Wide x 4' High **Hurricane Rated** Single Hung
  - State of Florida Approval
  - Dark Bronze Anodized Aluminum Frame
  - Double Pane - Tempered Glass / Polycarbonate
  - Building Wall Panel has Engineered Steel Framed Opening to Resist Hurricane Force Loads Against Window Unit
  - Window is field installed in a factory finished opening to prevent damage to window during shipping and installation.
- 2' Wide x 4' High **Anti-Terrorism Rated** Single Hung
  - Dark Bronze Anodized Aluminum Frame
  - Double Pane - Tempered Glass / Laminated Glass
  - UFC 4-010-01 Anti-Terrorism Rated
  - Building Wall Panel has Engineered Steel Framed Opening to Resist Blast Loads Against Window
  - Window is field installed in a factory finished opening to prevent damage to window during shipping and installation.



Building with 2' Wide x 3' High Sliding Vinyl Windows Factory Installed in Two Wall Panels



Building with 2' Wide x 4' High Single Hung Hurricane Rated Windows




Copyright 2026 Kelly Group, Inc.



Factory installed Light Transmitting Panels provide natural light in buildings. Kelly Klosure uses a 5 oz. polycarbonate panel on light transmitting panels making them code compliant for most applications.

Kelly's light transmitting panels for insulated buildings use a unique double glazed design shown in the section below that provides natural light while saving energy due to its higher insulating value.

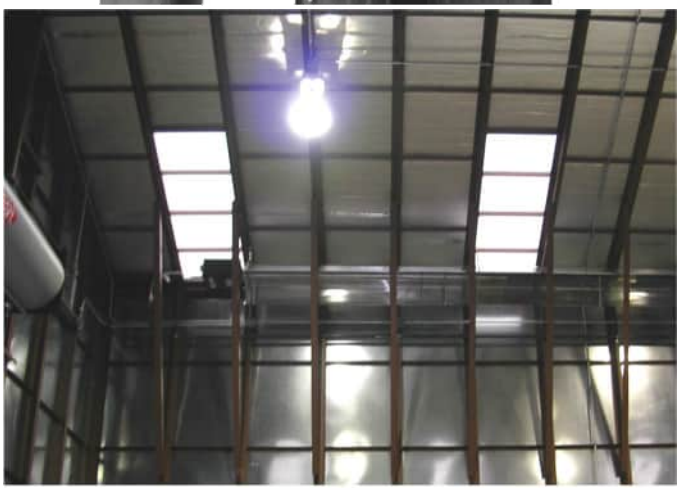

**Light Transmitting Panel Specifications:**

- Standard Size: 3' x 8'
- Standard Location: Top of wall panels
- Exterior Skin:
  - 5 Oz. Polycarbonate Corrugated Panel
  - Type CC2 (ASTM D635)
  - 50% Light Transmittance
- Interior Skin (Double Glazed Panels):
  - 1/4" Twin-Wall Extruded Polycarbonate
  - Type CC1
- Single Glazed Panel U-Value: 0.49
- Double Glazed Panel U-Value: 0.25

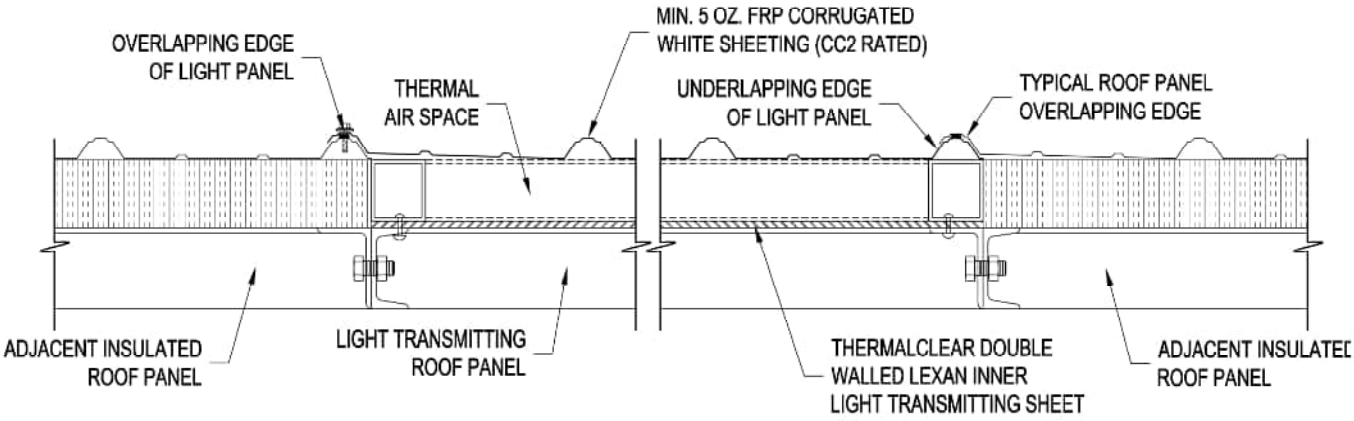


Double Glazed Light Transmitting Panel Section for Insulated Buildings


Copyright 2026 Kelly Group, Inc.

Kelly Klosure buildings are available with a variety of standard ventilation options. Louvers, dampers and roof ventilator collars are all factory installed for easy field installation of exhaust fans and roof ventilators.

**Standard Ventilation Options:**

- 24" x 24" x 4" Thick Fixed Fin Louver
  - 22 Ga. Galvanized Steel
  - 1/2" Bird Screen
- 24" Gravity Shutter for Above Louver
  - Aluminum Fins, Galvanized Steel Frame
  - 2.28 $Ft^2$ Free Area
  - Factory Installed on Wall Louver
- 24" Motorized Shutter for Above Louver
  - Galvanized Steel
  - Motorized Open, Spring Return
  - 120 / 240 Volt Single Phase
  - 2.05 $Ft^2$ Free Area
- 20" Diameter Exhaust Fan for Above Louver
  - 3223 CFM @ 0.00" SP
  - 2072 CFM @ 0.25" SP
  - 7.01 Sonnes @ 5'-0"
  - Ball Bear Motor (1/4 HP, 2.6 Amps, 115/1/60)
  - Gravity Shutter
  - Field Installed on Factory Installed Wall Louver
- Wind Driven Roof Ventilator
  - 12" Throat Diameter
  - Galvanized Steel with Aluminum Bracing
  - Oiless Bronze Upper Bearing
  - Thrust Type Lower Ball Bearing
  - 631 CFM @ 4 MPH Wind
  - Field Installed on Factory Installed Collar in Roof

Upgraded and custom ventilation options from Greenheck are shown on the next page.



Wall Panel with Factory Installed Louver and Exhuast Fan



Building with Factory Installed Intake Louvers



Building with Wind Driven Roof Ventilators


Copyright 2026 Kelly Group, Inc.

In addition to the standard ventilation options shown on the previous page, upgraded options are available.

The upgraded ventilation options shown are components of extruded aluminum material in lieu of the plain galvanized standard options. These are used in more demanding applications.

**Upgraded Ventilation Options:**

- 24" x 24" x 4" Pottorff EFD-435 Fixed Louver
  - 6063-T5 Extruded Aluminum
  - High Performance 35 Deg. Drainable Blades
  - 1.82 Ft² Free Area
  - 1/2" x 0.063" Aluminum Bird Screen
  - Factory Installed in Wall Panel
  - Standard Finish: Mill Finish Aluminum
- 24" x 24" x 4" Pottorff EFD-435 Fixed Louver / EXD-437 Damper
  - 6063-T5 Extruded Aluminum Construction
  - Gravity Operated Damper w/ Vinyl Blade Seals
  - 1.29 Ft² Free Area
  - 1/2" x 0.063" Aluminum Bird Screen
  - Factory Installed in Wall Panel
  - Standard Finish: Mill Finish Aluminum
- 24" x 24" x 4" Pottorff EFD-435 Fixed Louver / EXD-437 Damper
  - 6063-T5 Extruded Aluminum Construction
  - Manual Quadrant or Electric Motor Actuator
  - 1.29 Ft² Free Area
  - 1/2" x 0.063" Aluminum Bird Screen
  - Factory Installed in Wall Panel
  - Standard Finish: Mill Finish Aluminum
- 1,500 CFM Sidewall Exhaust Fan Package
  - 24" x 24" x 4" Pottorff EFD-435 Louver Factory Installed
  - Cook 20XMWH Sidewall Belt Drive Exhaust Fan
  - GSG-22 Damper
  - Fan & Damper Mounted in Galvanized Steel Wall Housing Field Attached to Wall Panel
  - 1,500 CFM @ 0.25" SP
  - 1/4 HP 115/60/1 5.8 Amps
  - 11.8 Sonnes @ 5'-0"
- Custom Ventilation Options Available upon Request
- Louvers can be painted or powder coated in a wide variety of colors to match or accent a Kelly building



Custom 2'W x 6'H Louvers
Factory Mounted in Endwall Panels



24" x 24" Combination Louver / Damper Factory Installed in Wall Panel


Copyright 2026 Kelly Group, Inc.

Kelly Klosure does as much at the factory as possible to make installation in the field easier. Buildings are available with factory installed framing and openings for HVAC of all types.

- **Factory Installed HVAC Openings**
  - Wall-Mount HVAC Units
  - Thru-Wall HVAC Units

  Openings are sized for the specified HVAC unit and all necessary framing is installed to structurally support the unit.
- **HVAC Supply**

  Kelly Klosure can supply various through-wall type HVAC units for smaller applications or supplies Bard Manufacturing wall-mount HVAC units for larger applications.
- **Factory Installed Framed Openings for Field Installed Equipment**

  In many cases, a building's ventilation is being designed and supplied by a separate contractor. In these cases, Kelly Klosure can coordinate factory installed framed openings of the size and location needed for field installed equipment. This minimizes the need for field structural modifications and ensures that a building framing member does not interfere with an equipment penetration.



Building with Factory Installed Framing for Customer Supplied Ventilation & Exhaust



Building with Factory Installed Framing for Bard Wall-Mount HVAC Unit



Interior View of Factory Installed Wall-Mount HVAC Framing


Copyright 2026 Kelly Group, Inc.

Kelly Klosure Buildings can be supplied with factory installed framing for field installed equipment doors such as overhead section and roll-up doors.

Because the equipment door opening interrupts the repetitive framing of a Kelly Klosure building, the surrounding wall panels are reinforced at the factory to carry the structural loads imposed by equipment doors.

The wall panels adjacent to equipment door openings, often called “jamb panels”, are factory reinforced with a larger steel channel that will act as the mounting surface for the door tracks. The panel above the door opening, often called the “header panel”, has the same larger channel installed as well as supports to attach the roll-up door hood if required.

The location of the door in the building, be it endwall or sidewall, can affect the building’s structure differently. Depending on the size of the building and how it is framed, one location may be more economical than another. An easy rule of thumb is that it is more economical to put equipment doors in the sidewall of smaller buildings and the endwall of larger buildings. However, a Kelly Klosure representative will work with the customer to determine the most cost effective way to lay out the building to meet the user’s needs.



A Factory Reinforced Equipment Door Opening in the Building’s Sidewall Being Lifted Into Place





A 15’Wide Equipment Door in a Building’s Endwall



Kelly Klosure Buildings can be Engineered to Support Large Custom Doors
(A 38’Wide x 24’High Rolling Steel Door Shown)


Copyright 2026 Kelly Group, Inc.

If an overhead door is requested to be included with the purchase of a building, Kelly Klosure offers Overhead Door brand rolling steel doors. If an alternate style or type of door is required, Kelly Klosure can provide the building with a framed opening for an owner supplied door system.

The following are the standard offerings and options available:

- **Overhead Door Model 600**
  - Standard on Smaller Buildings
  - Light Duty Applications
  - Non-Insulated
  - Standard White Finish
  - Standard Push-Up or Chain Hoist Operation
  - Optional RMX Medium Duty Electric Operator

  Link to Overhead Door for Additional Information:
  http://www.overheaddoor.com/commercial-doors/Pages/rolling-steel-doors-600.aspx
- **Overhead Door Model 620**
  - Standard on Larger Buildings
  - Heavy duty Applications
  - Non-Insulated
  - Standard Gray Finish
  - Standard Chain Hoist Operation
  - Optional RHX Heavy Duty Electric Operator

  Link to Overhead Door for Additional Information:
  http://www.overheaddoor.com/commercial-doors/Pages/rolling-steel-doors-620.aspx
- **Overhead Door Model 625**
  - Optional for Any Building
  - Heavy duty Applications Requiring Insulated Door
  - Double Wall Slats with Polyurethane Foam Insulation
  - Standard Gray Finish
  - Standard Chain Hoist Operation
  - Optional RHX Heavy Duty Electric Operator

  Link to Overhead Door for Additional Information:
  http://www.overheaddoor.com/commercial-doors/Pages/rolling-steel-doors-625.aspx
- **Optional Powder Coat Finish**
  - Powder Coat Door Slats, Track and Hood in 197 Available Colors
  - Greater Corrosion Resistance and Aesthetics

  Link to Overhead Door Color Chart:
  http://www.overheaddoor.com/commercial-doors/Documents/brochures/TigerDrylac_Powder_Coat.pdf

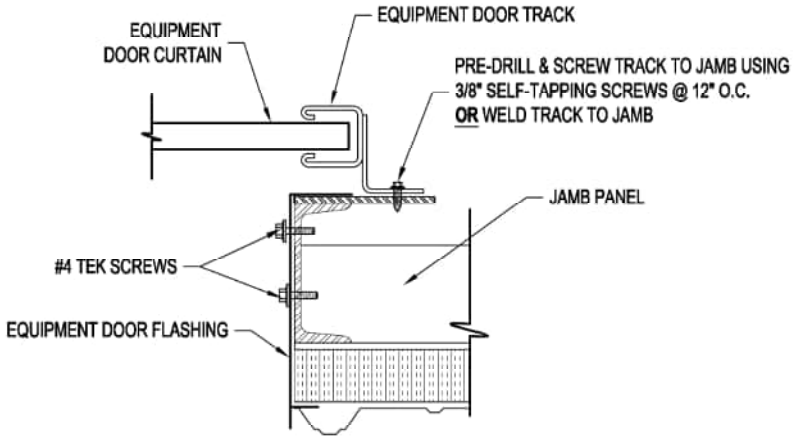


Door Jamb Detail—Overhead Door Model 600

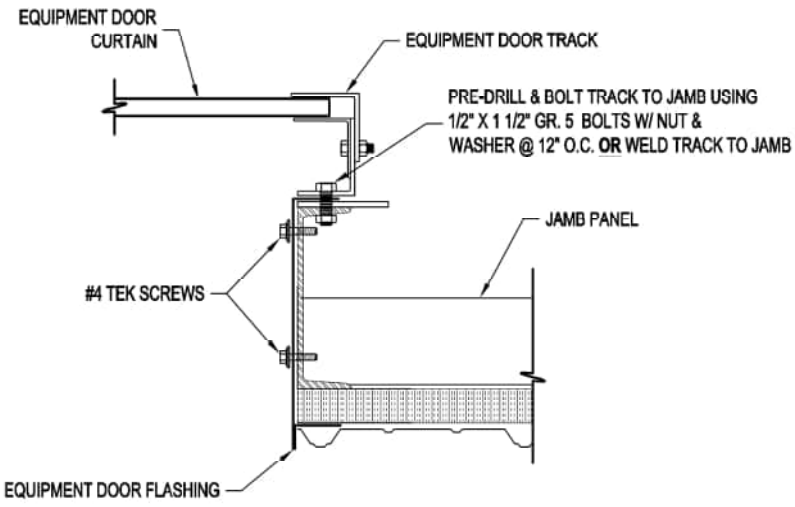


Door Jamb Detail—Overhead Door Model 620 & 625


Copyright 2026 Kelly Group, Inc.

Kelly Klosure Systems buildings are environmentally friendly due to the nature of the modular design and the high quality materials used through the building system. Kelly Klosure buildings will greatly contribute to LEED certified projects in a number of areas including the following:

- Kelly Klosure Systems buildings uses pre-finished metal panels for the outside skin of the building. These metal panels are available in a wide variety of colors, many of which are Energy Star approved. The Kelly cool metal roofing system's reflectivity and emissivity will meet requirements for LEED "Heat Island Effect, Roof" credit.
- Kelly Buildings use high performance rigid polyisocyanurate insulation installed as a continuous uninterrupted layer in R-values as high as R-34 along with insulated doors, windows and light transmitting roof panels to create a very efficient building envelope. This high efficiency building envelope will contribute to LEED "Optimize Energy Performance" credits.
- Kelly Buildings are shipped to the site using minimal packaging. The bulk of packaging that is used is in the form of re-usable steel shipping racks. These racks are made from 95% recycled steel and can be fully recycled at the end of their life.
- The structural frame of Kelly Klosure buildings is made from steel that uses 99% recycled material and is made in the United States, mostly at Nucor Steel in Norfolk, Nebraska 75 miles away from Kelly's production facility. The steel frame can be completely recycled at the end of its life span.
- The exterior skin of Kelly buildings uses prefinished metal panels and similar trim and flashing material. This material is made from 25-35% recycled steel and is completely recyclable at the end of its life span.
- Kelly Klosure Systems can factory install or supply a wide variety of ventilation options to contribute to the indoor comfort of the building and contribute to the LEED "Increased Ventilation" credit.
- Kelly uses water reducible paints on a majority of its structural framing, these paints are low VOC paints and contribute to LEED's "Low Emitting Material" credit.
- In addition to specific LEED credits, Kelly buildings are environmentally sound in their design due to their inherent flexibility with changing needs. Kelly buildings can be reconfigured, expanded, and relocated with ease as needs change. Instead of disposing of a building at the end of its current use, a Kelly building can be modified or relocated for a new use.




Kelly's Standard Colors:

Colors shown are for 3/4" profile exterior sheeting. Complete full size color charts for all profiles and finishes are available on Kelly Klosure's website: http://www.kellyklosure.com/how/resources

Paper color charts and metal color chips available upon request.


Copyright 2026 Kelly Group, Inc.

Kelly Klosure buildings can be specified for use in applications requiring 100% non-combustible construction.

- **Factory Installed Mineral Wool Insulation**

  Mineral wool is an optional factory installed insulation used in applications were 100% non-flammability is more critical than thermal efficiency.

  Semi-rigid thermal insulation manufactured from felted mineral wool bonded together with a high temperature binder.

  Properties:
  ASTM E136: **Non-Combustible**
  Flame Spread (ASTM E84): 0
  Smoke Developed (ASTM E84): 0

  Standard Thickness:
  2" R-8 (U Value = 0.125)

- **Factory Installed Aluminum Windows**
  For non-combustible applications, Kelly will use an upgraded Aluminum frame window in lieu of the standard vinyl frame unit.

  - 2' Wide x 3' High Aluminum Sliding Window
  - Gerkin Brand Rhino Series
  - Insulated Glass, White Painted Aluminum
  - U-Value: 0.38 Solar Heat Gain: 0.24
  - Visible Light Transmittance: 0.54

Kelly Klosure's exterior steel siding and roofing, steel personnel doors and equipment doors are all of non-combustible construction as a standard. Light transmitting panels are not used in non-combustible applications.



Panel with Mineral Wool Insulation


Copyright 2026 Kelly Group, Inc.

Kelly Klosure has tested wall assemblies with both standard insulation types for sound transmission. This data is useful for specifying the insulation type in the following situations:

- Enclosing loud equipment or machinery where a reduced sound level is required outside of the enclosure.
- Installing an office or break room type enclosure in a loud environment where a reduced sound level inside the enclosure is desired.

Complete test reports for each of Kelly's standard insulation types are available on the website at: http://www.kellyklosure.com/how/resources

Kelly Klosure has had wall panels with standard insulation options tested by Riverbank Acoustical Labs in Geneva, IL.

### Rigid Polyisocyanurate Insulation

Sound Transmission Class: 26

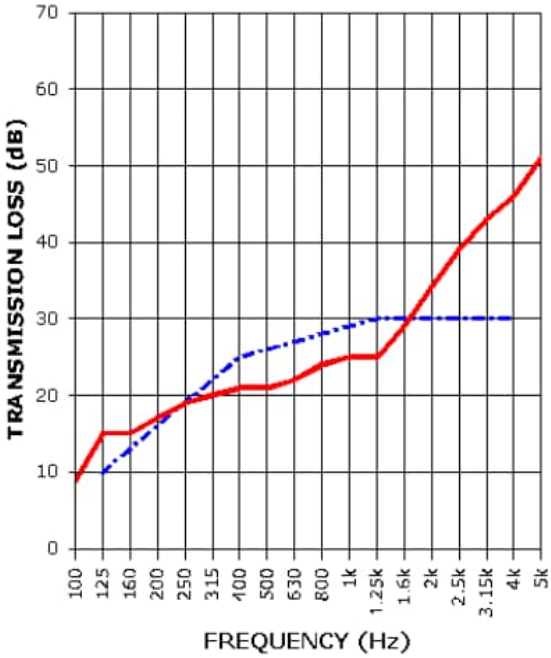


**STC=26**
OITC=20
**TRANSMISSION LOSS**
**SOUND TRANSMISSION LOSS CONTOUR**

### 2" Semi-Rigid Mineral Wool Insulation

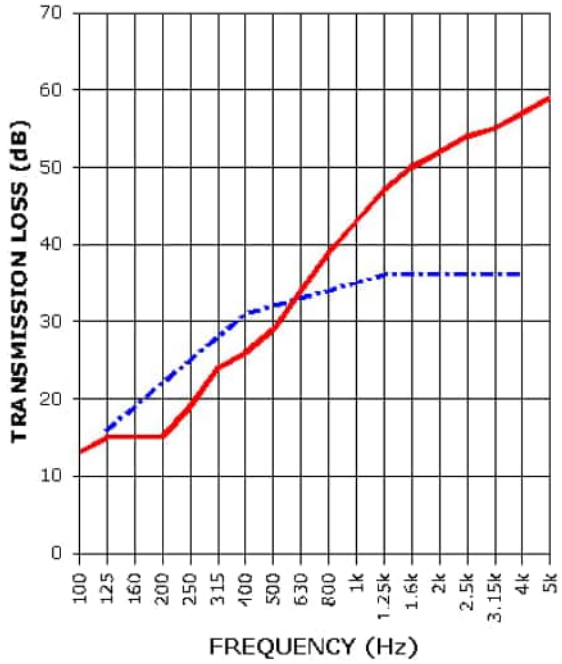


**STC=32**
OITC=23
**TRANSMISSION LOSS**
**SOUND TRANSMISSION LOSS CONTOUR**

Sound Transmission Class: 32



Two-Story Office & Break Room Located on the Turbine Deck at a Power Plant


Copyright 2026 Kelly Group, Inc.

Kelly Klosure Buildings are available with a unique removable roof system to allow for easier access to large equipment for maintenance and removal or installation.

Roof sections are designed to be removed intact without disassembly of the structure.





Roof Section Being Lifted From Building for Turbine Access during Power Plant Outage

**Basic Procedure:**

- Remove or unfasten building trim around removable roof section
- Unbolt perimeter of roof section from building eave and adjacent roof
- Attach rigging to picking points at building eaves
- Lift roof section vertically from building

**Basic Design Features:**

- Roof section designed to be removed during low wind conditions only. Building will meet specified wind loading with roof sections installed.
- Lifting pad-eyes factory welded to eave angles.
- Spreader beam and rigging specified and supplied by others.

**Custom Design Features Available:**

- For applications requiring more frequent roof removal, special formed steel overlaps at roof joints and custom eave connections can greatly increase speed of removal and reinstallation.
- For applications requiring longer term roof removal, the building can be designed for higher wind loading capacity with roof section removed.
- Lifting Lugs can be designed for site specific safety and rigging requirements with supporting documentation including structural calculations, weld inspections and proof load testing.

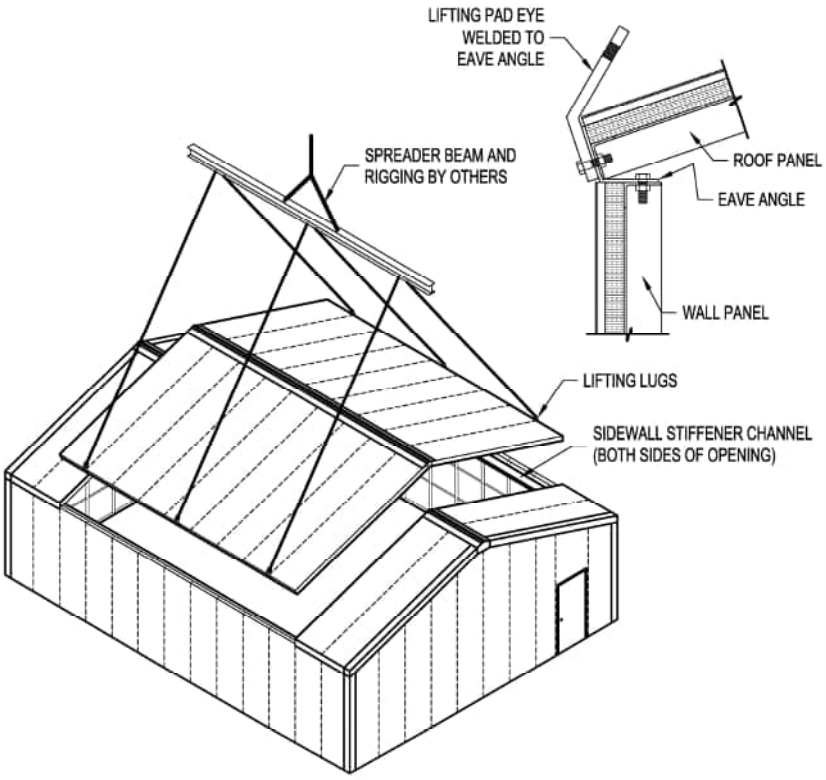


Typical Removable Roof Lifting Configuration &Lifting Pad-Eye Detail



Copyright 2026 Kelly Group, Inc.

Kelly Klosure Buildings can be designed with custom removable roof systems with the following features:

- Exterior Catwalk System gives access to roof connections and rigging points from exterior without need for man lifts.
- Roof Joints and Eave Connections designed for quick removal completely from exterior of building. No access to roof area is required from the interior of the building.
- Exterior Catwalks act as horizontal structural truss system supporting sidewalls against wind and seismic forces while roof sections are removed. This allows the building to retain its full structural capacity for wind and seismic with roof sections removed for long periods of time.
- Fall Protection Anchor Points are added to the roof sections to allow safe access to the roof joints.



Steam Turbine Generator Building
at Biofuel Power Plant in South Boston, VA

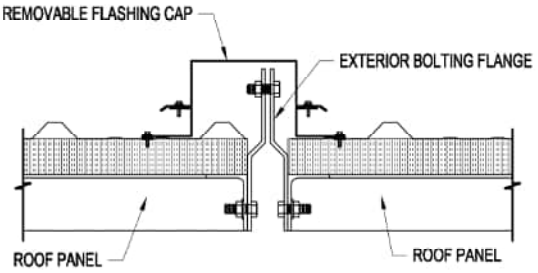


Roof Joint at Ends of Removable Roof Section

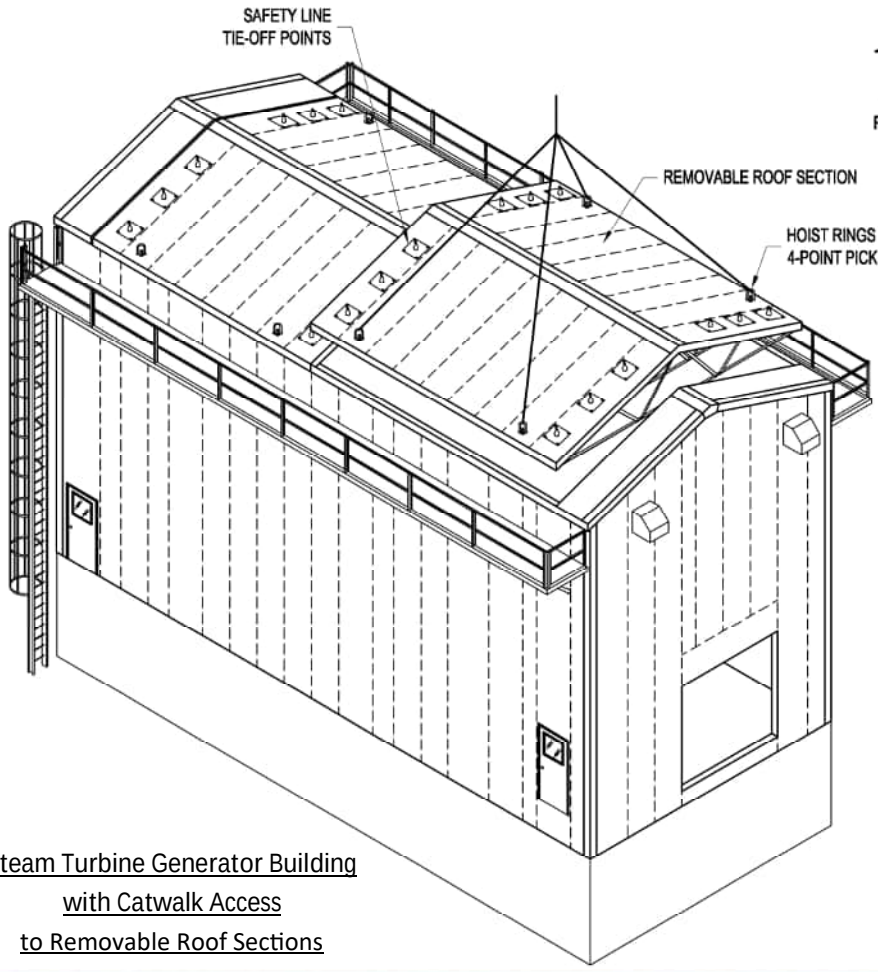


Steam Turbine Generator Building
with Catwalk Access
to Removable Roof Sections

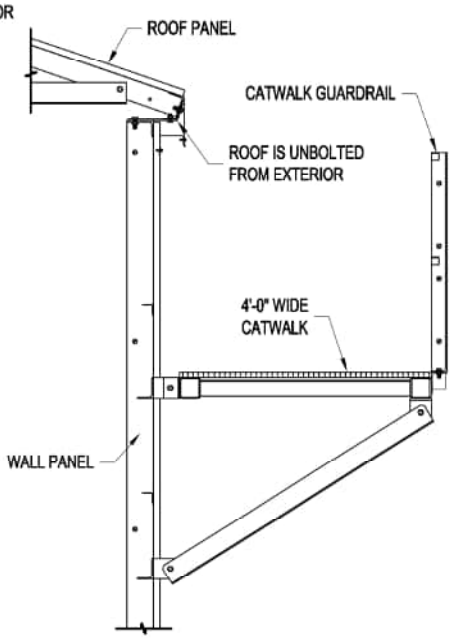


Eave and Catwalk Detail


Copyright 2026 Kelly Group, Inc.

Kelly Klosure Buildings can be designed to be crane liftable as a complete intact structure.

**Common Uses:**

- Removable Equipment Cover for Well Heads and Generators (Allows for easy access for maintenance and repair)
- Temporary Covers for Turbines and Generators during Outage Work (Ability to quickly protect and access critical components)

**Available Features:**

- Base channel can be supplied for use as a temporary foundation system or to decrease the number of anchors into the concrete base beneath.
- Small crane liftable buildings can be upgraded with available swivel hoist rings for 4 point lift without the need for a spreader beam.
- Lifting Lugs can be designed for site specific safety and rigging requirements with supporting documentation including structural calculations, weld inspections and proof testing.

(Note: Spreader beam and rigging is designed and supplied by others.)



Crane Liftable Building at Shipyard



Crane Liftable Equipment Refinishing Enclosure

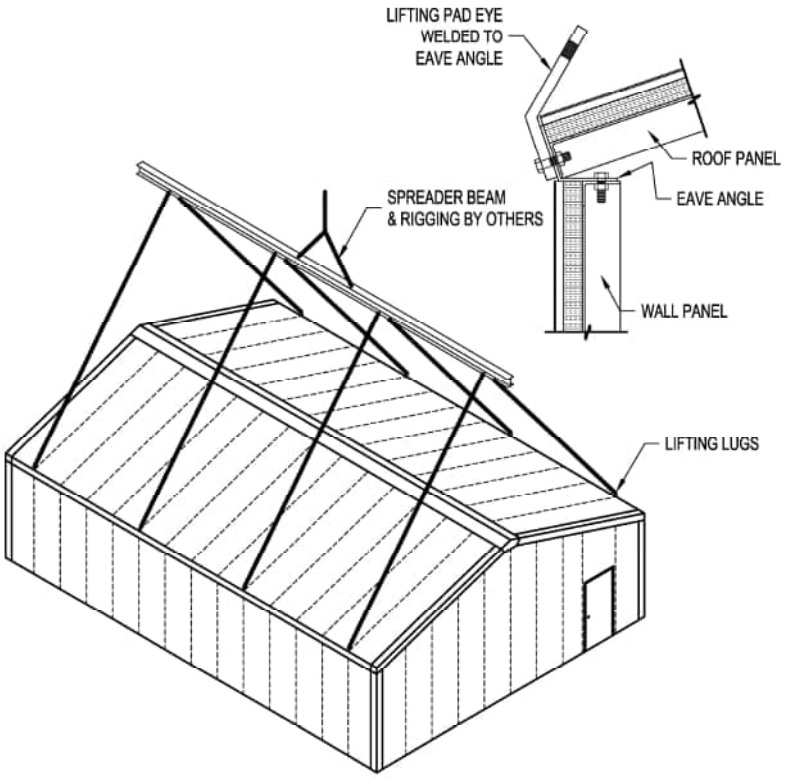


Typical Crane Liftable Building Configuration &Lifting Pad-Eye Detail



Copyright 2026 Kelly Group, Inc.

Kelly Klosure Buildings can include factory installed framed openings for a variety of field installed equipment. Working with Kelly Klosure to locate all penetrations in the building ahead of time saves installation time and trouble by ensuring that openings are fully supported and do not interfere with building framing members.

**Factory Installed Framed Openings for:**

- Pipe Penetrations
- Ductwork Penetrations
- Electrical Conduits and Cable Trays
- Ventilation and HVAC Penetrations
- Custom Field Installed Windows and Doors
- Other Custom Openings as Needed

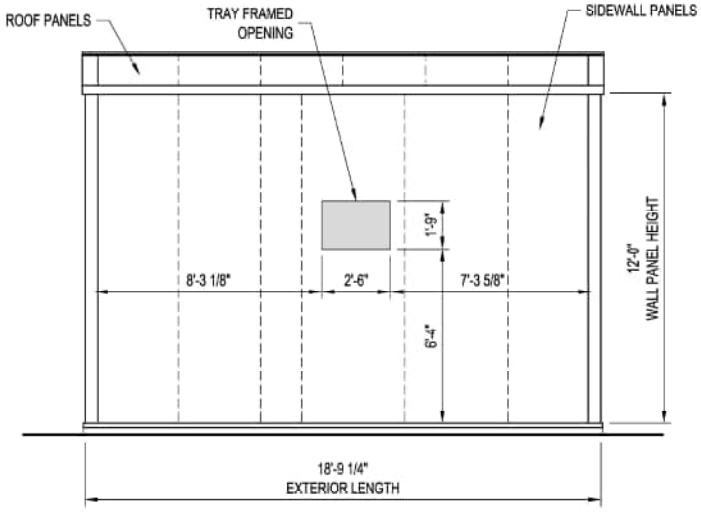


NORTH ELEVATION

Example Drawing of an Electrical Cable Tray Framed Opening Located on a Kelly Building



MCC Building with Factory Framed Cable Tray and HVAC Penetrations



Factory Installed Framing for Pipe Penetrations



Factory Installed Framing for Ventilation Penetrations


Copyright 2026 Kelly Group, Inc.

Kelly Klosure can supply basic pre-wired electrical packages to be installed inside buildings. Most of the work is done at the factory. The pre-wired flexible conduits simply need to be attached to the interior of the building with the supplied clamps, the lights hung and plugged in and electrical service supplied to the main panel. *The customer should verify that this type of electrical package meets local site and code requirements for its intended use.*



Electrical Package Standard Features:

Main Panel: Square D QO Series,
100 Amp, Single Phase, 20 Spaces

Lighting: Columbia LXEM 4-40-ML-RFA-ED-U
Dust/Vapor Resistant 4' Fixture,
Pre-Wired with Cord for Connection to
Switched Duplex Outlet, Lamps Included

Outlets: Standard 20 Amp Duplex Outlets

Conduit: 1/2" & 3/4" Flexible Conduit

Special Needs: 240 Volt Single Phase Outlets for HVAC and Basic Ventilation Controls Available Upon Request

Installation: Main Panel, Outlets and Switches are Factory Wired with Flexible Conduit. Clamps are Provided for Attaching Conduits and Boxes to Panel Frames.



Factory Mounted Panel for Simple Installation




Modular Lighting

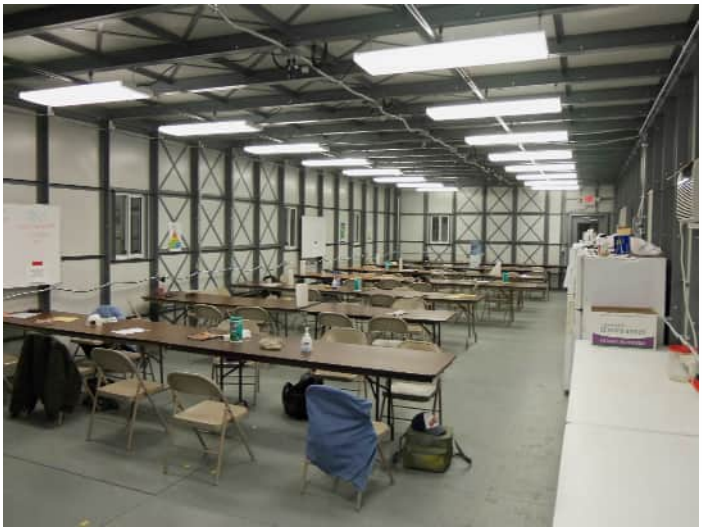

Larger Custom Packages Available


Copyright 2026 Kelly Group, Inc.

Kelly Klosure buildings can be designed for extremely high wind, snow and seismic loads. One extremely demanding application is hurricane and typhoon prone areas. Kelly Klosure has engineered buildings to withstand typhoon force wind loads as high as 180 MPH. Kelly's standard hurricane rated structure is based upon the stringent Florida State Building Code, specifically the Miami-Dade County wind load and wind-borne debris resistance requirements.

Standard Hurricane Rated Building Features:

- 170 MPH Wind Load Rating
- 24 Ga. (min.) 1.1/4" Rib Steel Siding and Roofing caries a "Miami-Dade County Product Control Approved" label for Small and Large Missile Impact
- Personnel Doors are Upgraded to Miami-Dade County Approved Assemblies:
  Door Frame: Upgrade to 14 Ga. Galvanized Steel
  Door Leaf: Upgrade to 16 Ga. Galvanized Steel w/ Honeycomb Core
  Entry Lock: Heavy Duty Sargent 10 Line Lever
  Hinges: Qty. = 3 FBB191 NRP US32D per Leaf
  Closer: American Eagle 7101BC
- Equipment Doors are Upgraded to Miami-Dade Hurricane Rated Roll-Up Doors

**Available Options:**

- 2' Wide x 4' High **Hurricane Rated** Single Hung Windows
  - Thermal Windows Brand Sideload 4100 Series
  - Dark Bronze Anodized Aluminum Frame
  - Double Pane - Tempered Glass / Polycarbonate
  - State of Florida Approval
  - Building Wall Panel has Engineered Steel Framed Opening to Resist Hurricane Force Loads Against Window Unit
- Hot-Dip Galvanized Structural Steel Frame for Superior Corrosion Resistance in Salt Rich Environment
- Drawings and structural calculations stamped by a structural engineer registered in the State the project is located in. (All 50 states available)



Building with Hurricane Rated Doors & Windows



Building Rated for 180 MPH Wind in Okinawa, Japan



HVAC Units Protected from Wind-Borne Debris


Copyright 2026 Kelly Group, Inc.

Kelly Klosure buildings can be supplied with anti-terrorism rated personnel doors and windows as required by many government and military installations. Kelly standard anti-terrorism features comply with the latest version of the United Facilities Criteria (UFC 4-010-01).

**Standard Anti**-Terrorism Features:

- 2' Wide x 4' High Single Hung Windows
  - Thermal Windows Brand Sideload 4100 Series
  - Dark Bronze Anodized Aluminum Frame
  - Double Pane - Tempered Glass / Laminated Glass
  - UFC 4-010-01 Anti-Terrorism Rated
  - Building Wall Panel has Engineered Steel Framed Opening to Resist Blast Loads Against Window
  - Window is field installed in a factory finished opening to prevent damage to window during shipping and installation.
- Personnel Doors and Framing Designed to Meet UFC 4-010-01
- Structural Calculations for Window and Door Support Framing





2-Story Kelly Klosure Relocatable Buildings at FT. Bragg, NC with Anti-Terrorism Doors and Windows used as Administration Buildings



Fire Station at Fort Riley, KS
with Anti-Terrorism Doors and Windows


Copyright 2026 Kelly Group, Inc.

Kelly Klosure buildings can be upgraded with additional corrosion resistance features to increase their life span in hostile environments.

Upgraded Corrosion Resistance for Use in:

- Coastal and Salt Rich Environments
- Water Treatment Facilities & other high moisture environments on the interior
- Roof Systems & Canopies where structural steel is exposed to the environment

Available Corrosion Resistant Features:

- Hot-Dip Galvanized Steel Framing per ASTM A123
  - In lieu of standard primer coating on panel frames and structural components.
  - Personnel door frames & thresholds are hot-dip galvanized as part of the factory welded wall panel assembly.
  - Kelly Klosure has access to a Valmont Coatings facility with a 58' long galvanizing kettle, even the largest Kelly Klosure structures can be hot-dip galvanized.
- Stainless Steel Exterior Fasteners
  - Exterior wall and roof panel fasteners can be upgraded to stainless steel for use in coastal and salt rich environments.
- Fiberglass & Stainless Steel Personnel Doors
  - In highly moist or salt rich environments, the personnel door leaf can be upgraded to fiberglass or stainless steel along with stainless steel hardware.
- Upgraded Equipment Doors
  - Rolling Steel equipment doors can be upgraded with powder coated guides, slats, barrel and hood for extra corrosion resistance.



Interior of Building Rated for 180 MPH Wind Load in Okinawa, Japan with Hot-Dip Galvanized Steel Framing





Roof Systems with Hot-Dip Galvanized Steel


Copyright 2026 Kelly Group, Inc.

Kelly Klosure System's buildings can be designed as 2-story structures. On larger structures, a free-standing Kelly Klosure mezzanine would be installed inside of the building to create the 2nd floor. On smaller buildings, a panelized floor system is integrated into the building design to create the 2nd floor. This floor system has factory welded checker plate steel flooring installed on modular panel frames.



Building with Kelly Expanded Metal Lockers on First Floor and 2nd-Floor Storage Level



2-Story Administration Building at Ft. Bragg, NC



2-Story Flat Roof Interior Building used for Power Plant Outage Support

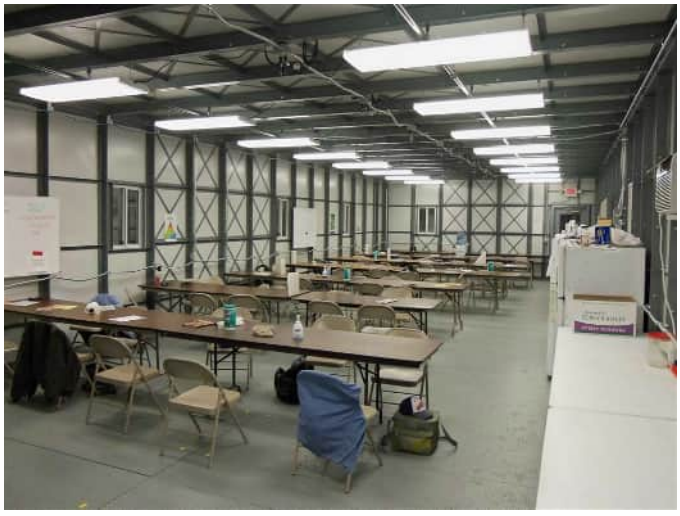

2nd Floor Interior of Outage Support Building


Copyright 2026 Kelly Group, Inc.

Small to medium size Kelly Klosure buildings can be design with a modular steel floor system for a variety of conditions including concrete pier supports, concrete slab or perimeter footing and existing steel structure.

The modular floor panels consist of a 3' wide steel frame with factory welded steel floor plate. In some cases, floor panels can be factory insulated.

Coating options include standard primer coating, enamel top coat, epoxy paint system and aluminum floor plate.

Floors have been designed for loading up to 600 PSF.

Contact Kelly Klosure to discuss the floor requirements for your specific project.



Modular Floor Panels



Floor System Assembled on Pier Supports



Finished MCC Building on Pier Supports



Copyright 2026 Kelly Group, Inc.

Kelly Klosure buildings are routinely supplied with custom features requested by the customer. Its impossible to list all of the examples.



Bridge Cranes & Monorail Beams

Buildings can be supplied with roof supported under-hung bridge cranes with up to 5-ton capacity. Top running bridge cranes can be installed on a column and beam structure within buildings. Building can be designed to support monorails and other structures from the roof framing.



**High Security Building Penetrations**

Penetrations in buildings with stringent security requirements can be factory reinforced with steel security bars. Heavy duty doors with mortise or electronic locks are available.



High Visibility Paint Scheme

Buildings can be outfitted with high visibility exterior paint schemes for use near airport runways.



**Falling Ice Protection**

Buildings for use beneath transmitter towers or other ice collecting overhead equipment can be outfitted with bar-grating on the roof to protect against falling ice.


Copyright 2026 Kelly Group, Inc.

Because Kelly Klosure buildings are comprised of modular factory assembled panels, they are very easy to transport. Material is shipped in re-usable “loading frames” that create racks of modular panels which can be stacked to save space during shipping and storage.

These racks can be easily loaded, unloaded and moved by forklift, telehandler or crane. They can be transported by flat bed trailer, curtain side trailer or standard shipping containers.

For buildings that are known to be of temporary use or are planned to be relocated later, the loading frames can be saved and re-used to transport or store the disassembled building.

Loading frames are made from recycled steel and can be completely recycled when no longer needed. Kelly Klosure buildings create very little construction debris to clog land fills.



Kelly Modular Panels Ready for Shipment



Kelly Modular Panels Being Loaded into Shipping Container



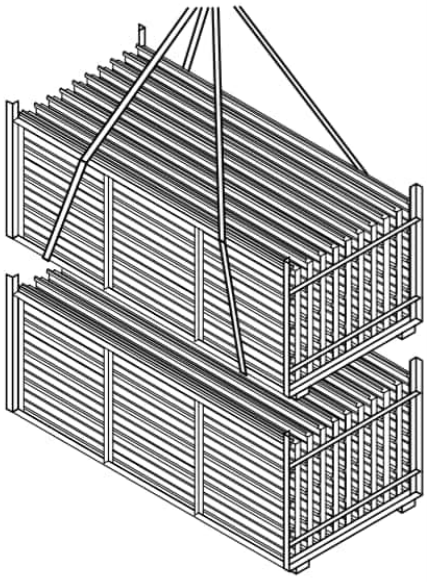

Panel Racks Being Moved with Slings by Overhead Crane



Rack of Panels Being Moved by Telehandler



Copyright 2026 Kelly Group, Inc.

Kelly Klosure's 2:12 pitch gable roof buildings install quickly with manual labor or a small forklift or telehandler. Buildings over 12' wide are recommended to have a forklift for installation. More detailed sample installation instructions are available at www.kellyklosure.com/resource.



*Two wall panels and a corner erection angle make the first corner of the building.*



*Additional panels create the first complete end-wall. A gable closure panel with factory attached trim creates the start of the gable roof shape.*



*Roof panels are hinged at the ridge. The roof structure is completed with roof trusses comprised of a tension tie and web braces that bolt to the roof panel in the air.*



*The final endwall installs similar to the first end-wall. Standard trim and flashing is installed to complete the exterior.*


Copyright 2026 Kelly Group, Inc.

Kelly Klosure's 4:12 pitch gable roof buildings install quickly with a properly sized crane.

More detailed sample installation instructions are available at www.kellyklosure.com/resource.



*The first endwall is assembled on dunnage on the ground.*



*The endwall and 3' of sidewall and roof are lifted into place with a crane.*



*Sections of sidewall panels are sub-assembled and lifted into place with the crane.*



*6' roof sections are assembled on the ground and lifted into place by the crane.*


Copyright 2026 Kelly Group, Inc.



Concrete anchors are installed as the building is erected. No pre-set anchors required.



Knee and ridge braces are installed as wall and roof panel sections are set in place.



The final endwall is added. Trim and flashing are installed to complete the building.

This 42' wide x 81' long classroom building was installed using troop labor without prior experience during a two week training deployment at Fort Dix in New Jersey.





Copyright 2026 Kelly Group, Inc.