KMF370	
AKA	n/a
ALTITUDE	2000m
CURRENT	70A 40°C
CLASS	Class I
DEVICE	rfi filter
EARTHING	M8x23 stud 6Nm
ENCLOSURE	aluminium 1.2mm
ENVIRONMENT	-25/+85/21
FLAMMABILITY	UL94 V-2 min
GND BOND	25A 50/60Hz
HUMIDITY	93% RH non-condensing
INSULATION	500Vdc ≥3.5MR
IP RATING	IP20
LOSS	6.4W/ph
LEAKAGE	2mA operating
MASS	3.2kg
MATERIAL	Group IIIa
MOUNTING	M6 4.5Nm
MTBF	22yrs (MIL-HDBK-217F)
OVERLOAD	150% 60s
OVERVOLTAGE	Category II
PACKAGING	ASTM D7386
PCB	FR4 ZPMV2 105°C
POLLUTION	Degree II
POTTING	air
POWER	58.1kW(16.8kW)
RESIDUAL	463V 5s
RESISTANCE	1.3mR/ph
SCCR	10kA (200kA when fused)
SHOCK	15g 11mS
SPACING	≥50mm ventilated surfaces
STYLE	terminal filter
SUPPLY	3P 50/60Hz
TERMINAL	screw 2.5-35mm² 4.5Nm 18mm str
VARISTOR	n/a
VIBRATION	5-55Hz 350um 55-500Hz 2G
VOLTAGE	400/480V (520V max)
WITHSTAND	2900Vdc 60s
EU/UK	CE/UKCA
US	uR
CAN	cUR
OTHER	

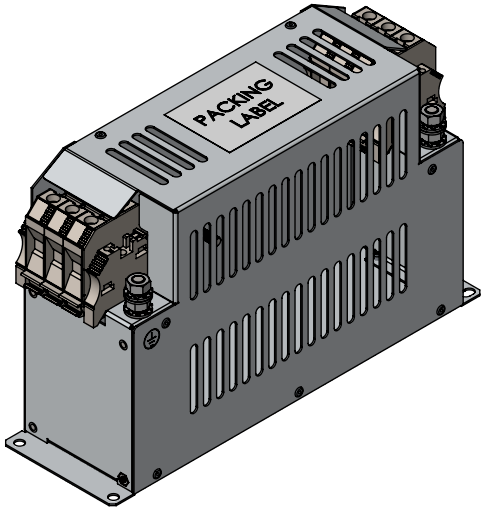

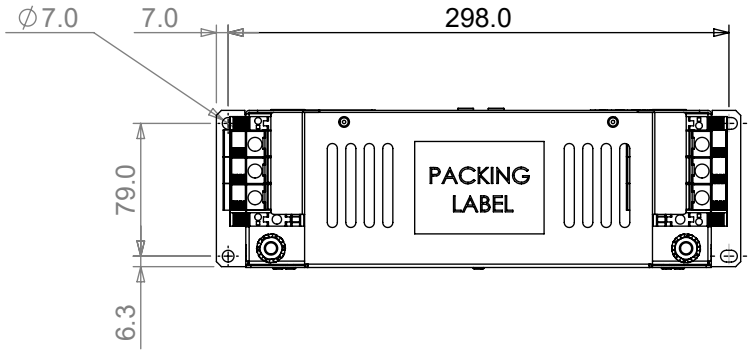

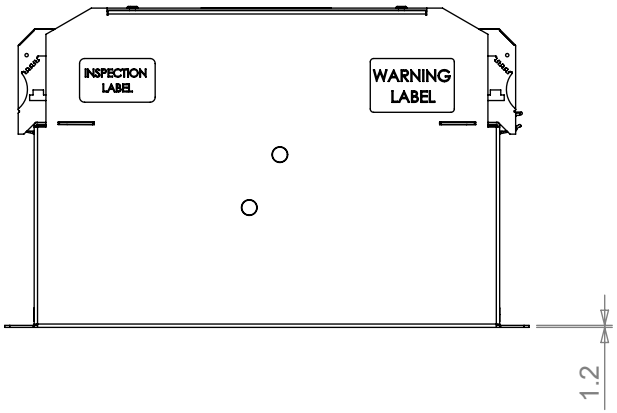

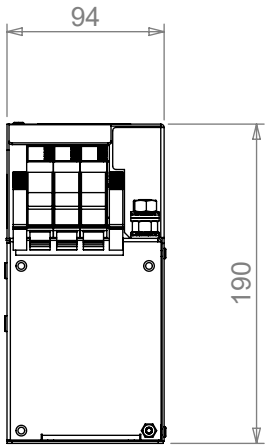

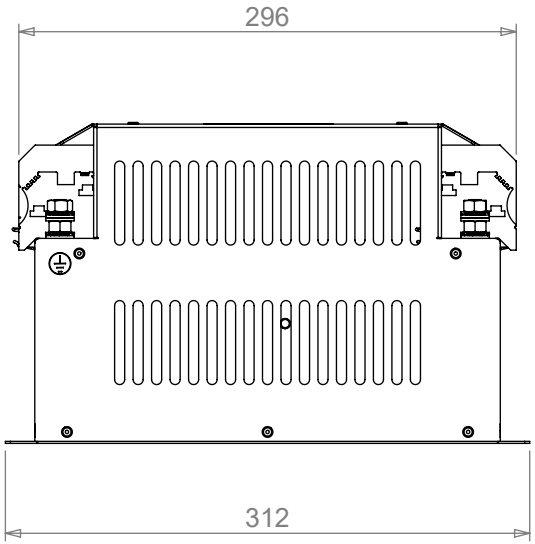

DELTRON Components | DELTRON Enclosures | ROXBURGH EMC | bes | DEM | Alpha3 manufacturing

+44(0)1724 273200 | www.dem-uk.com

PROPRIETARY AND CONFIDENTIAL:

THE INFORMATION CONTAINED IN THIS DRAWING IS THE SOLE PROPERTY OF **ALPHA 3 MANUFACTURING**. ANY REPRODUCTION IN PART OR AS A WHOLE WITHOUT THE WRITTEN PERMISSION OF **ALPHA 3 MANUFACTURING** IS PROHIBITED.

DEM Manufacturing is a division of Alpha 3 Manufacturing LTD

DEM Manufacturing, Deltron Emcon House, Hargreaves Way, Sawcliffe Ind. Park, Scunthorpe, North Lincolnshire, DN15 8RF, UK

UNLESS OTHERWISE SPECIFIED DIMENSIONS ARE IN MILLIMETRES
LINEAR & RADIAL TOLERANCE:
NO DECIMAL PLACES ±0.5mm
1 DECIMAL PLACE ±0.25mm
2 DECIMAL PLACES ±0.125mm
ANGULAR TOLERANCE: ±1˚

IF IN DOUBT ASK! DO NOT SCALE DRAWING!

FINISH	-
MATERIAL	-

THE FINISHED PRODUCT SHOULD BE CLEAN AND FREE FROM ALL LIQUIDS AND DEBRIS. SURFACES SHOULD BE OF UNIFORM APPEARANCE FREE FROM SHARP EDGES, BURRS AND CORROSION

AUTHOR	
EDITOR	DB
APPROVER	DB
THIRD ANGLE PROJECTION	
SHEET 1 OF 2	
SCALE 1:5	A4

TITLE	SPECIFICATION
FILE	KMF370
PART	KMF370
ISSUE/REV.	014
EDIT DATE	26/06/2023
RELEASE DATE	26/06/2023

RELEASED

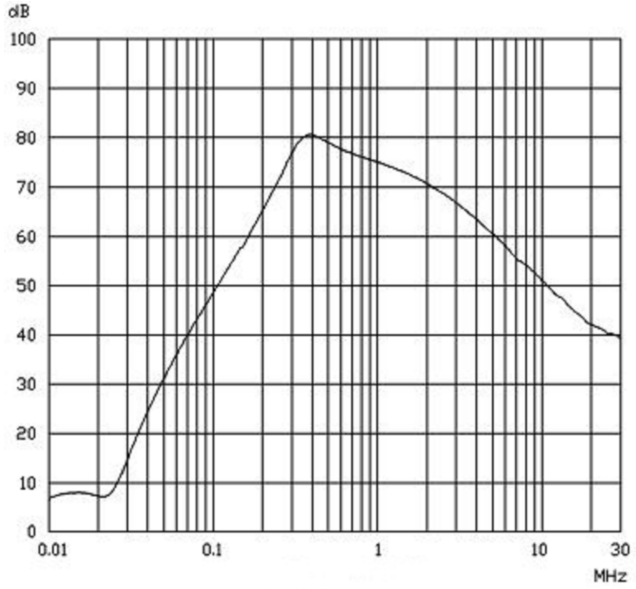

A1: 50/50Ω ASYMMETRICAL (COMMON)

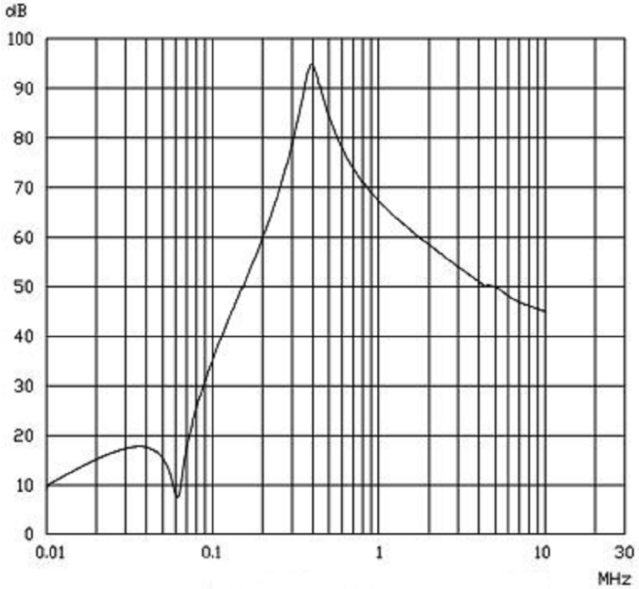

A2: 50/50Ω SYMMETRICAL (DIFFERENTIAL)

B: 50/50Ω ASYMMETRICAL (COMMON) LINE Y-CAP/CLIP REMOVED

C: 50/50Ω ASYMMETRICAL (COMMON) LOAD Y-CAP/CLIP REMOVED

D: 50/50Ω ASYMMETRICAL (COMMON) Y-CAPS/CLIPS REMOVED

DELTRON Components
DELTRON Enclosures
ROXBURGH EMC
b|c|s
DEM
Alpha3 manufacturing
+44(0)1724 273200
www.dem-uk.com

PROPRIETARY AND CONFIDENTIAL:

THE INFORMATION CONTAINED IN THIS DRAWING IS THE SOLE PROPERTY OF **ALPHA 3 MANUFACTURING**. ANY REPRODUCTION IN PART OR AS A WHOLE WITHOUT THE WRITTEN PERMISSION OF **ALPHA 3 MANUFACTURING** IS PROHIBITED.

DEM Manufacturing is a division of Alpha 3 Manufacturing LTD

DEM Manufacturing, Deltron Emcon House, Hargreaves Way, Sawcliffe Ind. Park, Scunthorpe, North Lincolnshire, DN15 8RF, UK

UNLESS OTHERWISE SPECIFIED DIMENSIONS ARE IN MILLIMETRES
LINEAR & RADIAL TOLERANCE:
NO DECIMAL PLACES ±0.5mm
1 DECIMAL PLACE ±0.25mm
2 DECIMAL PLACES ±0.125mm
ANGULAR TOLERANCE: ±1°

IF IN DOUBT ASK! DO NOT SCALE DRAWING!

FINISH	-
MATERIAL	-

THE FINISHED PRODUCT SHOULD BE CLEAN AND FREE FROM ALL LIQUIDS AND DEBRIS. SURFACES SHOULD BE OF UNIFORM APPEARANCE FREE FROM SHARP EDGES, BURRS AND CORROSION

AUTHOR	
EDITOR	DB
APPROVER	DB
THIRD ANGLE PROJECTION	
SHEET 2 OF 2	
SCALE 1:1	A4

TITLE	SPECIFICATION
FILE	KMF370
PART	KMF370
ISSUE/REV.	014
EDIT DATE	26/06/2023
RELEASE DATE	26/06/2023

RELEASED