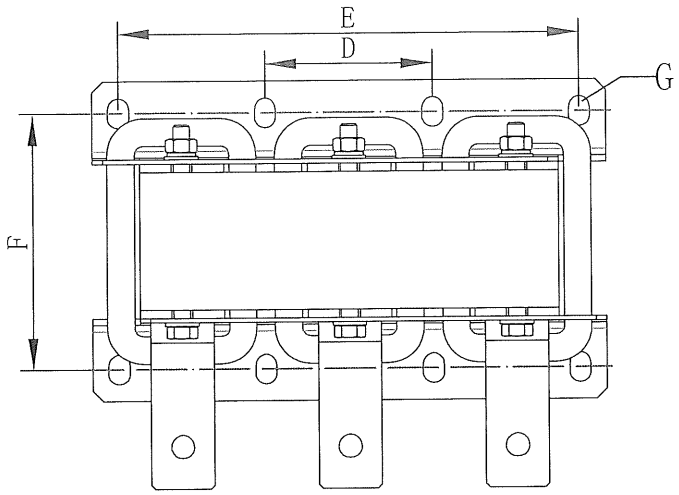

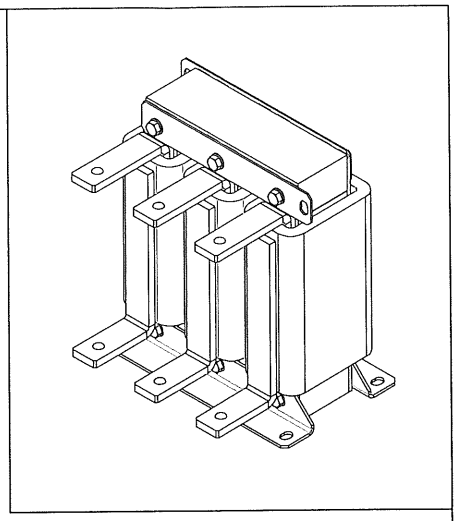

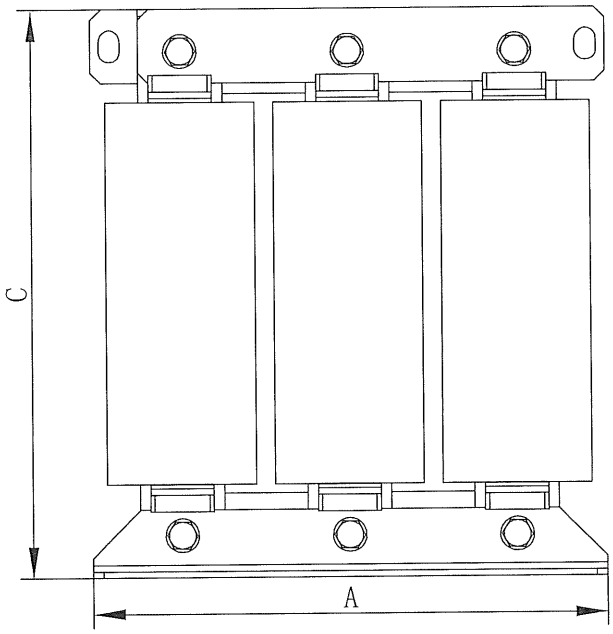

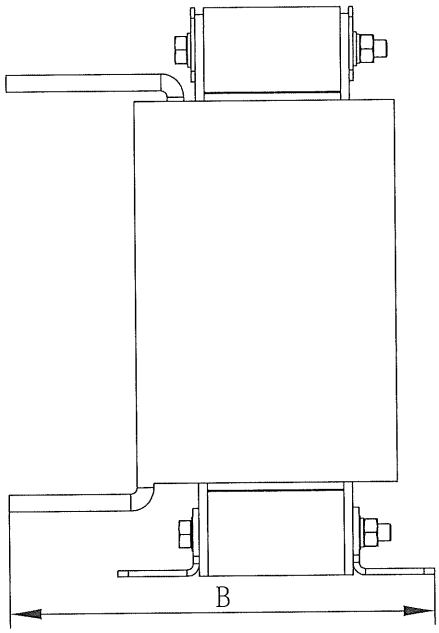

技术规格 Data:

产品型号 Type	额定电流 Rated Current (A)	额定电感 Inductance (mH)	尺寸 Dimensions(mm)							电阻 DCR (mΩ)MAX	损耗 Loss (W)	铜排孔径 Aperture
			A(MAX)	B(MAX)	C(MAX)	D(±1)	E(±1)	F(±2)	G			
JIR2012-500-CS	500	0.059	300	270	295	100	270	145	⌀12*16	1	501	⌀14

额定电压 Rated voltage: 400V AC 50Hz
变频功率 Inverte power: 250kW
过载能力 Overload capability: 2倍额定电流持续30秒
200% of rated current for 30sec.
1.5倍额定电流1分钟，每小时一次
150% of rated current for 1 minute, once per hour

绝缘等级 Insulation: Class H
耐电压 Hi-pot voltage: 3000V AC 50/60Hz 60S
绝缘阻抗 Insulation resistance: DC500V 100Mohm Min
温升 Temperature rise: 115k
噪音 Noise: 65dB MAX(水平距离1m处测试)
防护等级 Protection category: IP00
环境温度 Ambient temperature: -20℃~+55℃
冷却方式 Cooling: AN
绕组材质 Winding material: Cu (T2)
重量 Weight: 63kg

BASIC SCHEMATIC DIAGRAM:

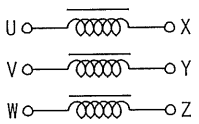

				输入电抗器 Input Reactor		JIANLI · 坚力 JIANLI ELECTRONIC TECHNOLOGY
				JIR2012-500-CS		Add:No.52 Xiangzhang Road, Changzhou City Jiangsu China Tel: 86-519-86972136 E-mail:jianli@cnfilter.com
A	---	2018-5-14	WB	SCALE	NONE	
NO	REVISION	DATE	BY	DRN. BY	ENG01	DWG. NO. ---