Painted Steel Bike Style Grate

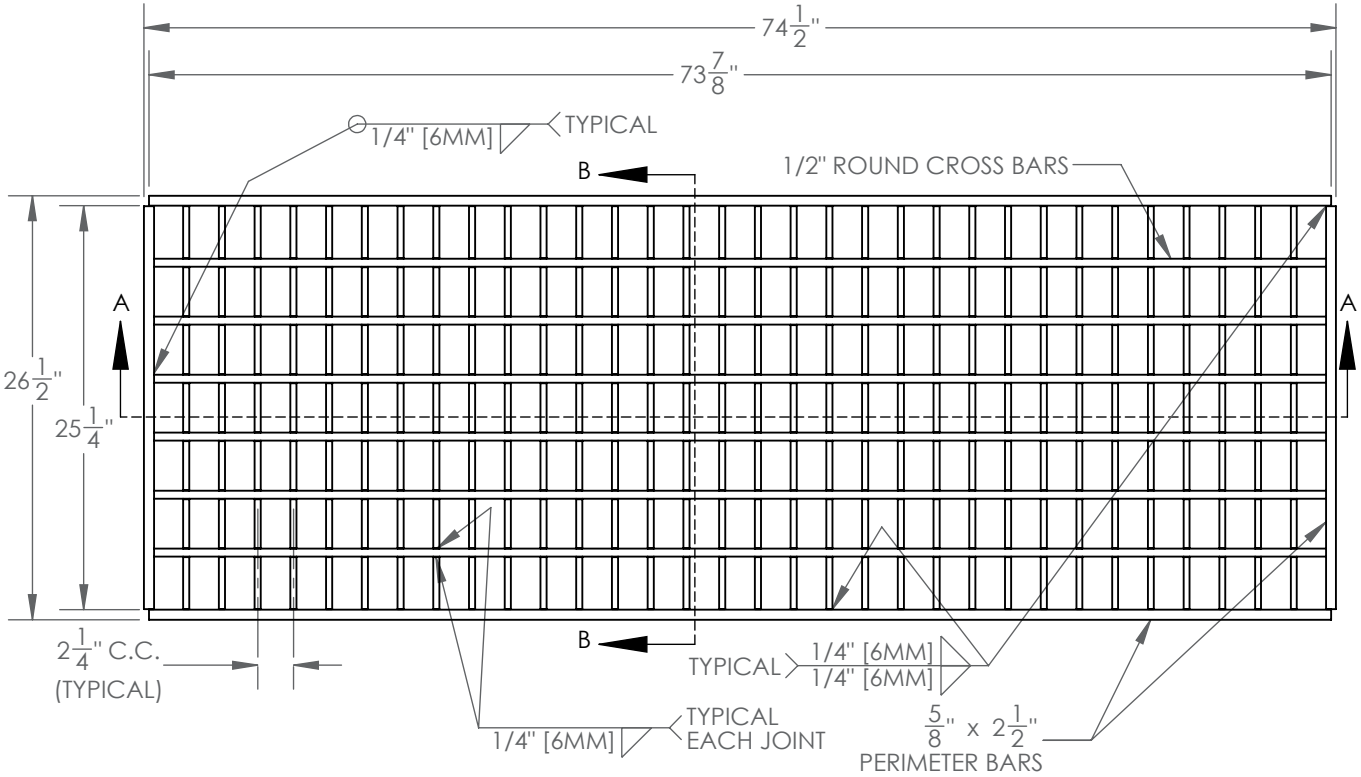

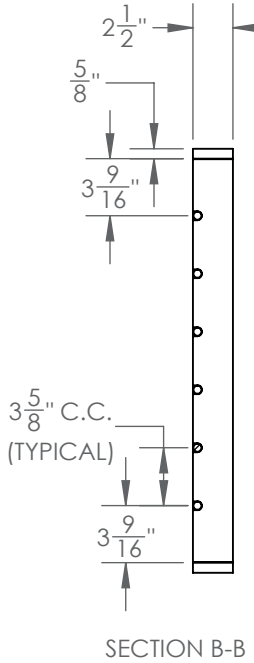

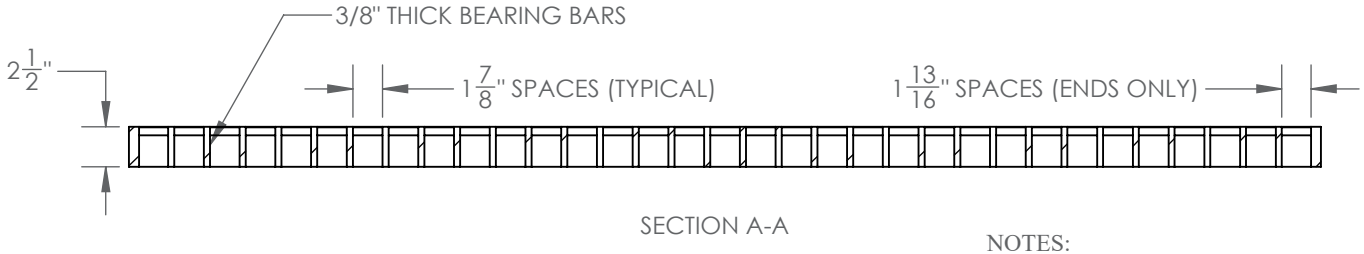

Product Number

PA26BKGR

Design Features

-Materials
  Steel-SEE NOTES
-Design Load
  H20
-Open Area
  N/A
-Coating
  Dipped
-√ Designates Machined Surface

Reference Material

-NPR12-4817A
-
-Estimated Weight: 322 LBS.
-Country of Origin: USA
-Revision Level: A

NOTES:

1.) ALL BEARING BARS AND PERIMETER BARS SHALL BE ASTM A709 GR50 (A572) STEEL. ALL OTHER MATERIAL SHALL BE ASTM A709 GR36 (A36) STEEL.

2.) ALL CROSS BARS SHALL BE LOCATED FLUSH ALONG THE TOP SURFACE OF THE GRATE.

3.) COMPLETE UNIT SHALL BE PAINTED WITH AN APPROVED BITUMINOUS PAINT, IN ACCORDANCE WITH PUBLICATION 405, SECTION 1105.02(s).

Drawing Revision

3/3/2017 Designer: ARO
10/12/2021 Revised By: ARO

Disclaimer

Weights (lbs/kg), dimensions (inches/mm) and drawings provided for your guidance. We reserve the right to modify specifications without prior notice.

Quality is very important for EJ, and it includes compliance to measurements and features in this drawing. We are constantly looking at innovation with optimized designs and materials. Please check our website ejco.com for more information. Technical information contained in this drawing represents intellectual property of EJ. If you are using it in other documents please contact EJ, us.sales@ejco.com.
Copyright © 2017 EJ GROUP, Inc.
All rights reserved.

Contact

800 626 4653
ejco.com