TOP MAT - POUR THIS WAY

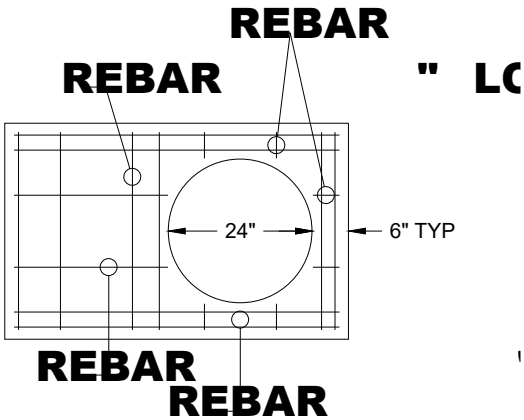

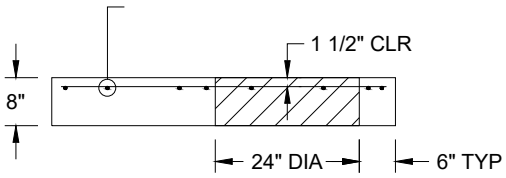

BOTTOM MAT REBAR LAYOUT

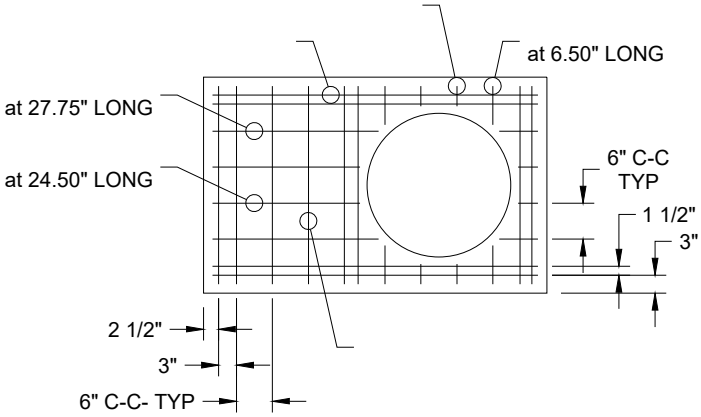

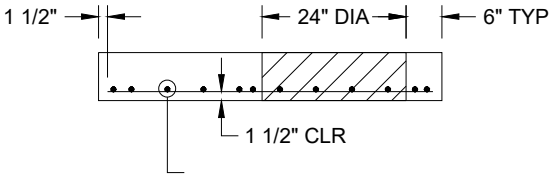

JOB #:	STRUCTURE: SLABPA-24

Deihl Vault & Precast, Inc.
1786 State Route 254, Orangeville, Pa 17859
www.deihlprecast.com

DESCRIPTION:

PENNDOT 36" x 57 1/4" SLAB WITH 24" ACCESS OPENING CONFORMS TO PA DOT RC-46

DISCLOSURE:
This drawing is the sole property of Deihl Vault & Precast, Inc. It is furnished with the understanding that usage is limited to authorization at the time of transmittal. This drawing is not to be modified or transmittal. This drawing is not to be modified or copied without written permission.

DRAWN BY:	CHK BY:	DWG SCALE: 3/8" = 1'-0"
DATE:	CHK'D DATE:	PLOT SCALE: 3/8" = 1'-0"

DWG FILE:
PENNDOT - 36 x 57 SALB WITH 24" OPENING

REVISIONS	DATE	BY