USITT.

LIGHTING DOCUMENTATION RECOMMENDED PRACTICE

PRESENTED BY THE LIGHTING COMMISSION

PUBLISHED: FEBRUARY 2025

290 ELWOOD DAVIS ROAD - SUITE 100 - LIVERPOOL, NY 13088
PHONE: 800-938-7488

DISCLAIMER

The drawings contained in this set of recommendations are adapted from real-world documents used in production. Details have been preserved to show recommended practices for documenting entertainment lighting systems. However, these documentation examples do not imply endorsement of any product, company, or brand by USITT or the authors.

PREAMBLE

The original Graphics Standards Board noted that a standard is an example for comparison and an authority which serves as a model. It should be noted that this model cannot hope to cover all possible situations encountered when creating lighting documents. Instead, it should be viewed as a guide for lighting practitioners. This document, therefore, represents a "recommended practice" or "RP". You are encouraged to use your best judgment in creating documents that are legible, consistent, and meet the needs of the project and those who work on it.

The purpose of this document is to re-establish a uniform language among the theatrical lighting industry. It is intended to provide guidelines for documenting an entire lighting package (including but not limited to: light plots, sections, system diagrams, device schedules, etc.). These guidelines establish recommendations for graphics but allow the drafter to make modifications as needed to best suit the project and environment they are working in (e.g. circles are the container utilized for notation of channel numbers, modification of the circle to an oval to better fit 3 digit channel numbers is a logical modification and shown in places in this document.).

This RP applies to all entertainment lighting related documentation for all applications (ie. project basis or permanent installation) regardless of what method or software is used for creation.

1 INTRODUCTION

Past versions of the "USITT Recommended Practice for Theatrical Lighting Design Graphics" included information typically used by lighting designers to communicate their lighting design for a production. It has been adapted into this document, which supersedes all previous documents, and now serves to guide all lighting documentation, which includes lighting show control and networking documentation.

Documenting lighting designs and the systems that support them requires the creation of multiple different documents. The complete set of documents that provide information on a lighting design and/or a lighting system is called a document package. A lighting document package typically includes "drawn" or drafted documents, "text" documents, and computer files.

1.1 Document Forms

1.1.1 Drawn Documents

Drawn documents provide a graphical view of lighting equipment and systems and are used for communicating location and other installation information for lighting equipment. Often, they are created digitally via CAD software and/or can be hand drawn. These drawings are organized into drawing sheets, also called plates, either to scale or not-to-scale. Scaled drawings are used to show the size of objects, the specific location of objects, and how objects fit together once installed. Not-to-scale drawings, such as diagrams, are used to show the functional relationship of objects and connections between objects that may not be physically located next to one another.

1.1.2 Supporting Documents

1.1.2.1 Text Documents

Text documents provide a text based version of lighting information that displays large quantities of specific information in a compact format. All documentation should be identified with a title to describe the information presented. Text documents should have a header and/or footer with: document title, project name, date of modification, page number out of the total number of pages.

When able, all schedules/lists should follow similar formatting across all schedules for easy reading.

1.1.2.2 Computer Files

While drawn and text documents are often created, shared, and stored as computer files, additional computer files should also be included as part of lighting documentation. This includes any other computer file required for show operation, or backup and redundancy purposes.

1.2 Lighting Document Types

A lighting document package may include any of the following documents:

DRAWN DOCUMENTS

Scaled Drawings
- 3.1 Light Plot
- 3.2 Lighting Section
- 3.4 Lighting Set Electrics
- 3.4 LED Tape Detail
- 3.4 Boom Detail
- 3.4 Lighting Mounting Detail
- 3.4 Focus Point Layout
- 4.7.1 Rack Elevation
- 4.7.2 DIN Enclosure Elevation
- 4.7.3 Device Details

Not-to-scale Drawings
- 4.4 System Diagram
- 4.4.5 Intraconnect

TEXT DOCUMENTS

Schedule Documents
- 3.3.1 Instrument Schedule
- 3.3.2 Channel Hookup
- 3.3.3 Circuit Schedule
- 3.3.4 Address Schedule
- 4.5.1 Device Schedule
- 4.5.2 IP Address Schedule
- 4.5.3 Fixture Control Schedule
- 4.5.4 Patch Panel Schedule
- 4.5.7 Panel Schedule

List Documents
- 3.3.5 Shop Order
- 3.3.5 Equipment List
- 4.5.5 Port List Schedule

Production Documentation
- Equipment Datasheets
- Equipment Manuals

COMPUTER FILES

- Device Configuration Files
- Software or Firmware Version
- Lighting Console Show Files
- Drawn Documents Base Files
- Installation Files
- Program Software Utilities
- Visualization Files

Graphic samples of components can be found in each section. At the end of the document, a full system package sample can be found for reference.

The lighting package plates should be ordered to present information from a broad to detailed perspective.

The documenter decides which documents to create and include in a document package. For example, when another department may be utilizing the same control network as lighting, creating a control network documentation package that is separate from the lighting design package is beneficial for communication and installation.

Most published lighting document packages are transmitted to the production staff as PDF files that may be emailed or placed in an online-shared location. In many circumstances, versions of the lighting documents in the file format they were originally created in are also included with the document package.

2 GENERAL DOCUMENTATION RECOMMENDATIONS

This section includes general recommendations that should be applied in the creation of lighting documentation in general. It is assumed that users of this RP will apply these general recommendations to the creation of all documents in addition to the document specific recommendations included later.

2.1 Document Identification and Package Information

All documents that are included in a lighting document package should be given a name that communicates the content of the document. A title page or cover sheet including a list or index of all documents should be utilized for larger lighting document packages.

2.2 Drawn Document Recommendations

In this RP there are several references to the USITT - Graphics Recommended Practice Version 5.0 (USITT-GRP). The USITT-GRP can be found on the USITT Technical Production Commission webpage: www.usitt.org/technical-production-commission.

2.2.1 Drawing Scale, Size, and Display Method

Drawn documents should be laid out in an arrangement that will fit on paper sizes listed in USITT-GRP Section 5. Scaled drawings should follow recommendations in USITT-GRP Section 6 allowing the documentation to be printed and/or viewed on screen at the user's discretion.

2.2.2 Text Sizes, Drawing Notations, and Dimensions

Follow the recommendations on notations and text in USITT-GRP Sections 3 and 8.

2.2.3 Line Weights and Opacities

Follow the line recommendations in USITT-GRP section 2 except as modified or added to in this section and the sections on creating specific lighting documents.

Drawn documents use lines to communicate information. By changing how light or dark lines appear on a drawing a drafter can clarify the difference between two adjacent drawn elements or add emphasis to important objects on the drawing. A drafter can change how light or dark a line appears by changing the line width and/or by changing the line opacity.

- Thick lines:
  - Perimeter of lighting instrument symbols and accessories on light plots
  - Perimeter of lighting devices on plan and section view drawings
- Medium lines:
  - Lighting positions on light plots, plan views, or sections
- Thin lines:
  - Details within lighting instrument symbols on light plots
  - Details within lighting devices
  - Dimension lines, extension lines, leader lines
- Reduced line opacity and/or use gray color
  - Deemphasize background information like scenery or architectural information on light plots and other plan view drawings.

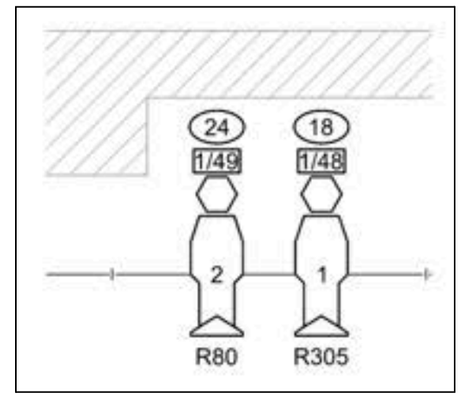

(Figure 2.2.3.0.1: Use of grayscale lines for venue architectural lines to focus visual attention on lighting devices.)

2.2.4 Line Types

In lighting documentation different line types (solid, dashed, dotted, and other repeating patterns) may be used to delineate varying departments equipment, architectural features, cable type, etc. Line types used should be identified via legend/key.

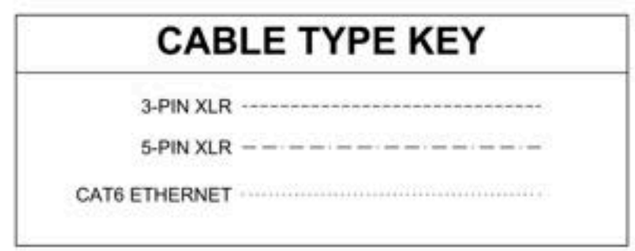

(Figure 2.2.4.0.1: Different line types with labels to clarify the meaning of a line.)

2.2.5 Color

Color can be useful for differentiating the meaning of lines or adding emphasis to something on a drawing:

- Black: the majority of information including instruments, devices, electric pipes, keys, notes, etc.
- Gray and/or reduced line opacity: all scenic elements or other elements that require awareness but not attention
- Colors: giving special attention where needed. Be sure lines are clearly visible when printed on white paper. Lighter colors are harder to see when printed on white paper, especially if the line is also drawn in a lighter line weight. (See Figure 2.2.5.0.1)

However, when deciding whether to use color on drawings these two recommendations should be followed:

1. For the accessibility of users with color vision disabilities, it is recommended that colored lines be used only in conjunction with other methods of line differentiation, such as line weight, line type, grayscale, and/or line labels.
2. Check to ensure all production team members have access to color printing before using it as a drafting element.

(Figure 2.2.5.0.1: Varying colors in varying line weights)

2.2.6 Title Blocks and Sheet Borders

All drawn lighting documents should include a sheet border and title block on each drawing sheet to aid in drawing identification.

For lighting documentation, it is advised to include the following information in the title block in addition and/or substitute for what is recommended in USITT-GRP section 8.2.

Typical Information:
Name of producing organization
Name of production
Name of venue
Drawing title
Drawing sheet number
Predominant scale of drawing
Date the plate was published
Revision number and date
Lighting Designer

Additional Information may include:
Location of the venue
Director of the production
Other designers & production members
Lighting Assistant & Head Electrician
Drafter
Drawing Approval
Contact Information
Union & Production logos
Notes on implementation
Liability Statement

(Figure 2.2.6.0.1: Example title block)

2.2.7 Drawing Labels

When more than one drawing is included on a plate, a drawing label should be included with each drawing. A drawing label is used to identify each drawing with a name and a number. The drawing number is often used to cross-reference the drawing on other plates in the drawing set. The drawing label may also include additional information related to that drawing. See USITT-GRP Section 9, Drawing Label.

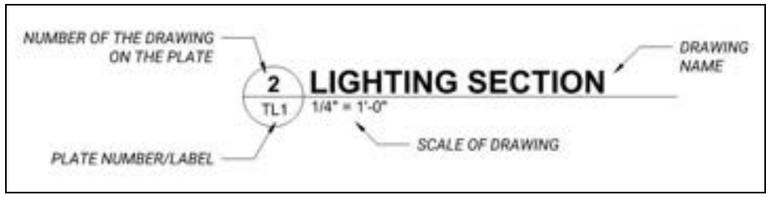

(Figure 2.2.7.0.1: Example of drawing label.)

2.2.8 Graphic Symbols Recommendations

This section provides guidelines for the creation and use of lighting equipment symbols used on both scaled drawings and diagrams that are not drawn to scale.

2.2.8.1 General Lighting Symbols

A unique symbol should be used for each type or variation of fixture, accessory, power device, control device, etc. Symbols for different iterations of the same equipment type should use simple graphic variation such as the addition of a line or a letter. Each symbol should be included in a legend or key with a definition for the symbol.

Detailed symbols specific to manufacturers' products and/or supplied via computer drafting programs may be used or may be created by the drafter. However all symbols should follow the recommended line weights as outlined in Section 2.2.3.

Follow these recommendations when drawing symbols on plan, section, or elevation drawings:

- Draw symbols as close as possible to the size and shape of the real object in scale and locate them on the drawing at their real-world position.
- Use a small rectangle with a leader line connected to a device ID as the symbol for devices that are too small to be clearly seen when drawn in scale. Draw the rectangle to approximate the size of the device in scale. The device ID allows the symbol to be cross-referenced with a device schedule that includes specific details for each device. (See Figure 2.2.8.1.0.1)

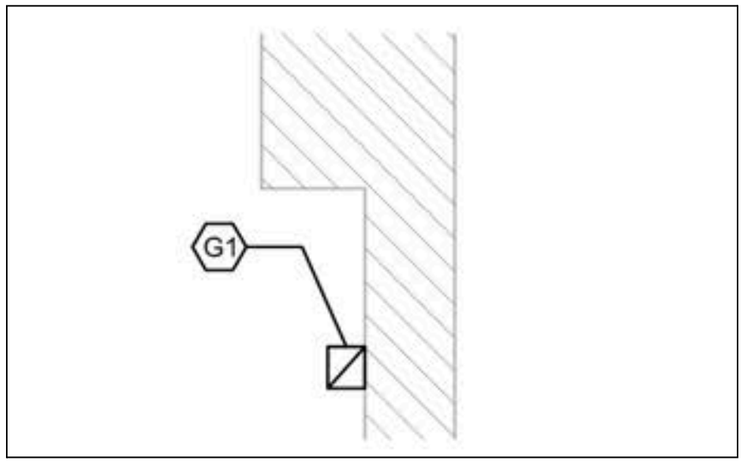

(Figure 2.2.8.1.0.1: Rectangle used as a symbol with a Device ID connected to the symbol with a leader line.)

Follow one of these two recommendations when drawing symbols on diagrams or drawings not-to-scale:

1. Draw a geometric shape like a rectangle or a simplified outline of the real object's shape. Add graphic representations of important parts of the device represented by the symbol. (See Figure 2.2.8.1.0.2)
2. Import or draw a realistic looking image of the device represented by the symbol. A scale drawing of the object may be used however it may be enlarged or reduced as needed for use on the diagram. (See Figure 2.2.8.1.0.3)

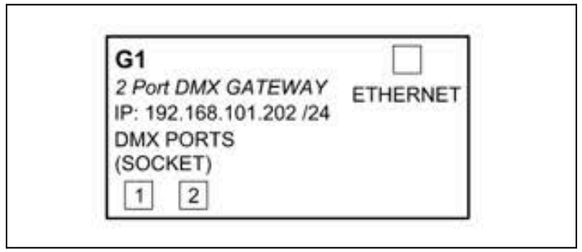

(Figure 2.2.8.1.0.2: Symbol created from a geometric shape.

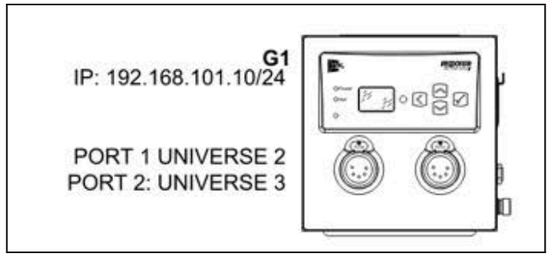

(Figure 2.2.8.1.0.3: Symbol created from a realistic image of the device.) Graphic provided courtesy of ETC.

2.2.8.2 General Device and Symbol Identification

At a minimum, a unique device identifier should be included with the symbol for each piece of lighting equipment to make it possible to identify and cross reference each lighting device on drawings, schedules, and any other documents that include an instance of that device. (ie. a unit number on a lighting fixture, a label for a lighting position, a device label for a gateway)

A letter, letter combinations, and/or words may be used to create the device type portion of a"Device ID" to communicate a particular type of device. For example, "N" could be used to indicate a lighting control network infrastructure device. A number is then used after the letter(s) to create a unique device ID for each device of that type. Numbers are typically assigned sequentially however gaps are allowed. (See Figure 2.2.8.2.0.1)

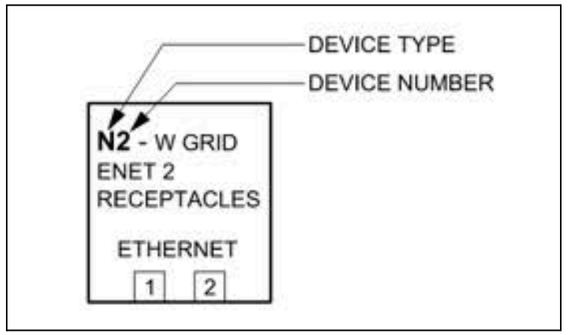

(Figure 2.2.8.2.0.1: Example of parts that make up a Device ID.)

Device IDs should be illustrated in a way that stands out from other information fields. This may be accomplished by increasing font size, bolding, or italicizing the Device ID compared to other information fields (See Figure 2.2.8.2.0.1), or by placing the Device ID inside a container shape connected to the symbol with a leader line (See Figure 2.2.8.1.0.1).

2.2.8.3 General Legend and Keys

All drawn lighting documentation must include a guide that provides information on how to interpret the meaning of symbols, lines, information fields, and any other graphic convention used on the drawings. This guide may be called a legend or key. It should include both symbol examples with definitions and the location/meaning for information fields. (See Figure 2.2.8.3.0.1)

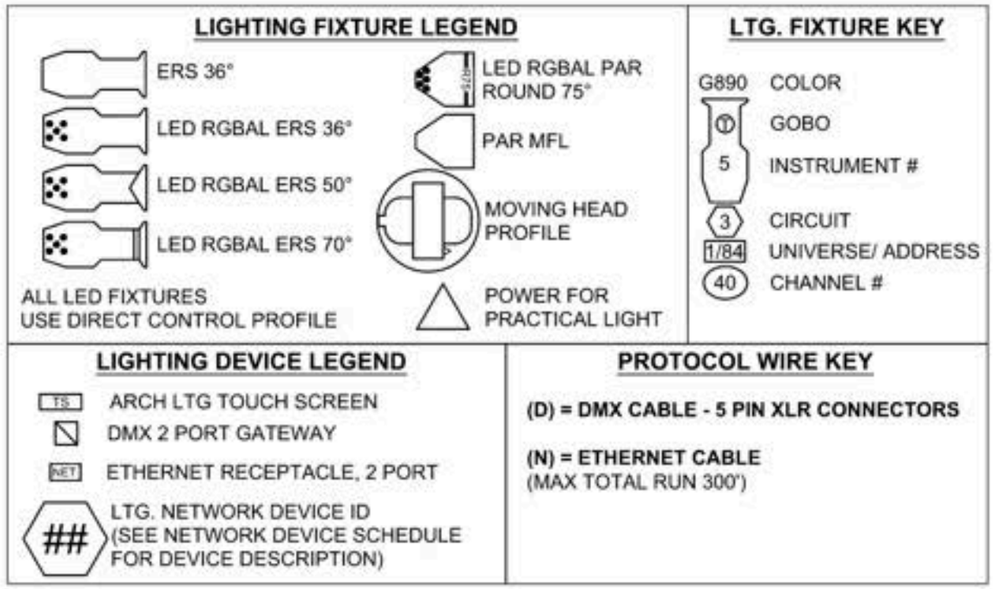

(Figure 2.2.8.3.0.1: Combined legend and keys)

WIRE KEY

LABEL	DESCRIPTION	SIGNAL
X	BELDEN #9729. (HOME-RUNS TOPOLOGY).	DMX OUT
N	BELDEN #1583A. (HOME RUN TOPOLOGY).	NET
D	BELDEN #9729. (DAISY CHAIN TOPOLOGY).	DMX IN

(Figure 2.3.8.3.0.2: Wire key sample)

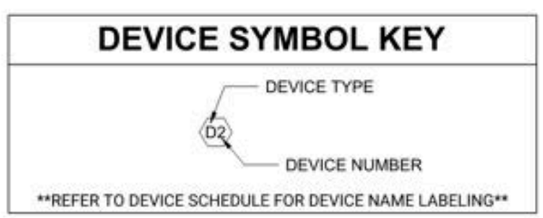

(Figure 2.2.8.3.0.3: Generic device symbol key sample)

A legend may be placed in any location on a drawing sheet that does not conflict with other information. The same legend encompassing all document set information may be used on every drawing sheet in the same location, or individual legends may be created for each respective plate's information. A legend may be separated into different parts that focus on specific information.

3 LIGHTING DESIGN DOCUMENTATION

3.1 Light Plot

The Light Plot is a map that graphically represents the physical components of a lighting design, showing the position of all the instruments and electrical devices used to provide illumination and visual effects for a production with a unique identifier. Usually drawn in a ground/top plan view, it also shows their physical relationship with the other elements of the show and architecture of the venue. It may also display other attributes, such as color, dimmer, address, and channel assignments relative to each individual unit.

The Light Plot is a composite plan drawing that provides a descriptive view of the instruments so the production staff may accurately execute the design and intent. Different hanging positions and the playing area may be compressed in a light plot, or separated into separate plates representing different hanging positions. The front of house plan, for example, might be on one sheet while an over stage plan is on another. While this may improve comprehension of the overall design, care must be taken to ensure the separation between hanging positions on different documents is clear and concise.

3.1.1 Components of a Light Plot

The light plot should include all information necessary to ensure clear understanding of the designer's intentions. The location and identification data of every instrument, accessory, and specialty unit should be represented on the light plot, or accompanying documentation if space does not permit, along with the following information:

- The centerline
- The proscenium arch, plaster line, smoke pockets, or other architectural details necessary to orient the lighting design in the space
- A ground/top plan locus point from which all measurements are taken. In a proscenium theatre, that might be the intersection of the centerline and plaster line, or centerline and set line. In a non-proscenium space the location may be the edge of the playing area, scenic design's plaster/center line, or a corner of the architectural space.
- A lineset schedule, when appropriate
- Indicator of distance left and right of centerline, in scale
- Indication of on-stage distances up and down stage (or the 90° axis to centerline) in scale
- A drawn representation of the edge of the stage, where applicable
- A drawn representation of the edge of the playing area, where applicable
- Basic scenic elements
- Scenic masking
- Architectural and scenic obstructions
- All lighting hanging/mounting positions, labeled, with measurements from the locus point
- All locations of ladders, box booms, or booms indicated on the plot using a shaded or hatched footprint of the element
- Trim measurements for adjustable mounting positions. They should read from the stage level surface (or other common point of reference) to the bottom of the pipe (or mounting position), where applicable
- Elevation heights to boom positions are measure from bottom of the boom base to the side arm or clamp, where applicable

- The legend or instrument key denoting symbol type and notation (see Section 2.2.8.3)
- The title block (see Section 2.2.6)

3.1.2 Lighting Instruments

Lighting instruments should be shown on a light plot as symbols and drawn to scale, unique to each instrument type used. Each symbol should be placed so that its location reflects its exact hanging point. Unless otherwise noted, the default spacing between typical fixed focus instruments is 18" (or 45 cm) to allow for adequate focus range of each instrument, on average. When the symbols are placed in relative locations other than the default, dimension lines or other measuring notations should be added to indicate the distance and to facilitate mounting the instruments. It is common that instruments are drawn on the 90˚ axes relative to the hanging positions.

Each symbol should be accompanied by the following information:

- Instrument number
- Channel (or control designation)
- Indication of beam angle as part of the symbol, where appropriate.
- Indication of any accessories with separate power or control, such as scrollers, gobo rotators, etc.
- Indication of any accessories such as templates, irises, top hats, barn doors, etc.
- Axis notation for directional filters and/or PAR lamps, when appropriate

Additional information may include:

- Focus notation
- Wattage and/or voltage of the instrument
- Address, universe, circuit, and/or dimmer number or space for the electrician to add this information
- Ganging information such as "two-fers"
- Color notation
- Gobo (or template) notation

At a minimum a legend for traditional light plots should include:

1. Examples of each symbol and the corresponding symbol definition as well as
2. A diagram showing the standard placement and meaning for information fields.

The following additional information may be included in the legend:

- Instrument or device manufacturer and model
- The required quantity of each device type
- Beam angle for each instrument type if not notated in instrument's name
- Wattage (total instrument load) and/or ANSI lamp code
- Indication of device voltage
- Device settings (ie. operation mode, personality, software version, etc)

- Designation of all notations associated with each instrument.
- Color manufacturer designation (e.g., R = Rosco, L = Lee, G = Gam, etc.)
- Symbols for any accessories – gobos, irises, color scrollers, top hats, barn doors, etc.
- Gobo (or template) manufacturer designation (when applicable)
- Representation of "two-fers"
- The meaning of abbreviations used on the drawing sheet
- Notes and instructions related to devices used in that lighting design or lighting system.

3.1.3 Designation of Lighting Positions and Fixture Numbering

Numbering is at the drafter's discretion and should be designed to be both logical and practical for the electricians and the production team.

Atypical hanging positions should be designated in a fashion that is sensible to the electricians. Instruments hung should be numbered in an intelligible fashion compatible with other instrument numbering on the plot.

3.1.3.1 Proscenium Venues

Traditional numbering scheme:

- Lighting positions are designated from plasterline outward
- Instruments on positions perpendicular to the centerline (e.g., battens) are numbered from stage left to stage right.
- Vertical positions (e.g. booms,ladders), positions parallel to centerline (box booms), and their fixtures are number top to bottom then downstage to upstage
- Instruments inserted between previously numbered fixtures are assigned the lower instrument's unit number plus a letter (e.g., 3A, 3B).

3.1.3.2 Non-proscenium Venues

Pipe grids or similar lighting position layouts should be designated by numbers on one axis of the grid, by letters on the other axis, and progress outward.

3.1.4 Generic Graphic Lighting Instrument Symbols

The symbols that follow represent a selection of standard generic symbols that approximate the size and shape of stage instruments and are presented as a guideline. Further differentiation or notation may be necessary to distinguish between instruments of approximately the same size. Specific choices should be considered to differentiate between different manufacturers of the same type of instrument.

Because of the number and complexity of attributes in automated fixtures, each designer must determine a logical notation system for those instruments used. Likewise, designers must choose a notation system to reflect current LED fixtures with multiple attributes.

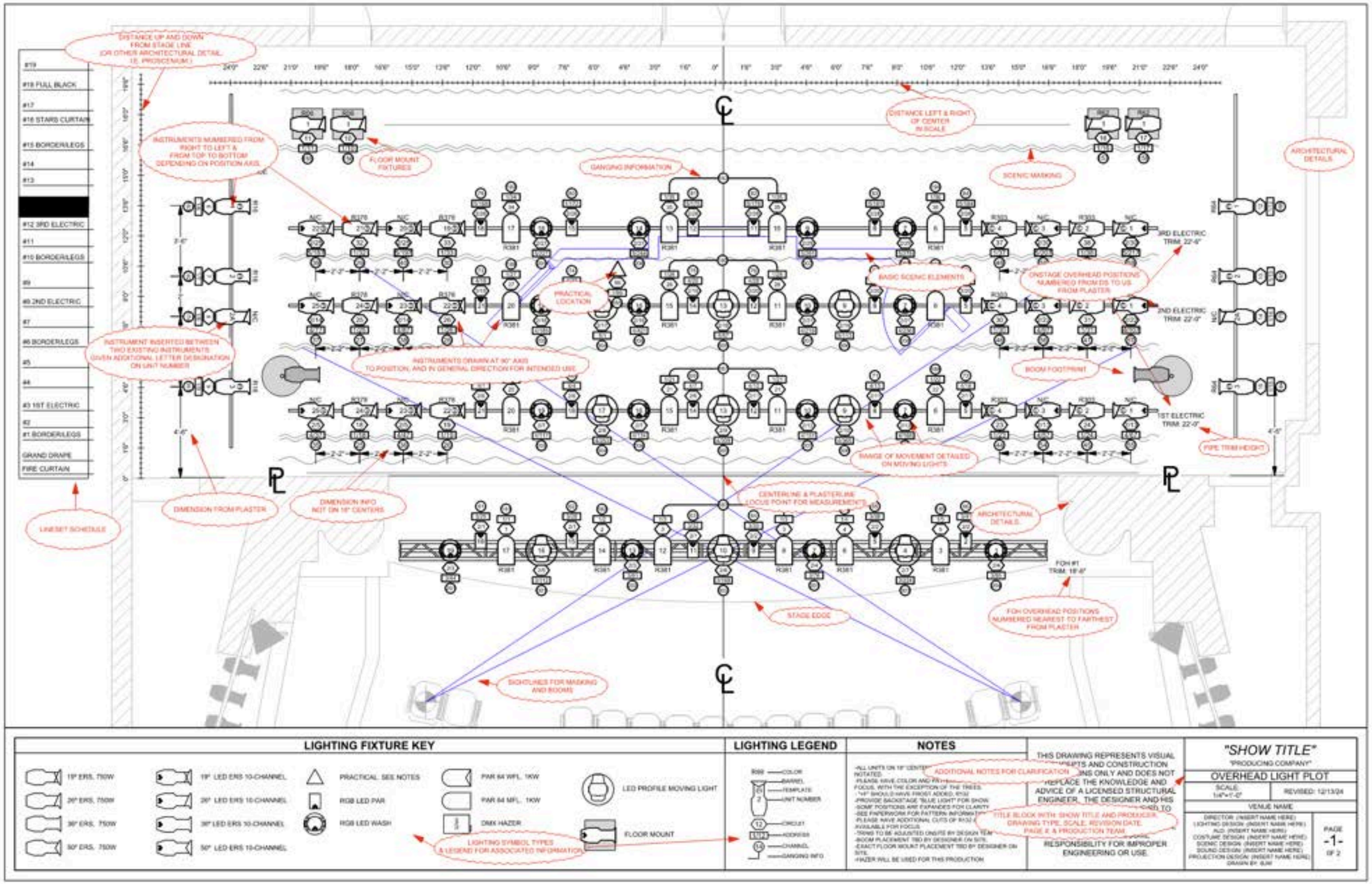

(Figure 3.1.4.0.1 : Parts of a light plot - proscenium style)

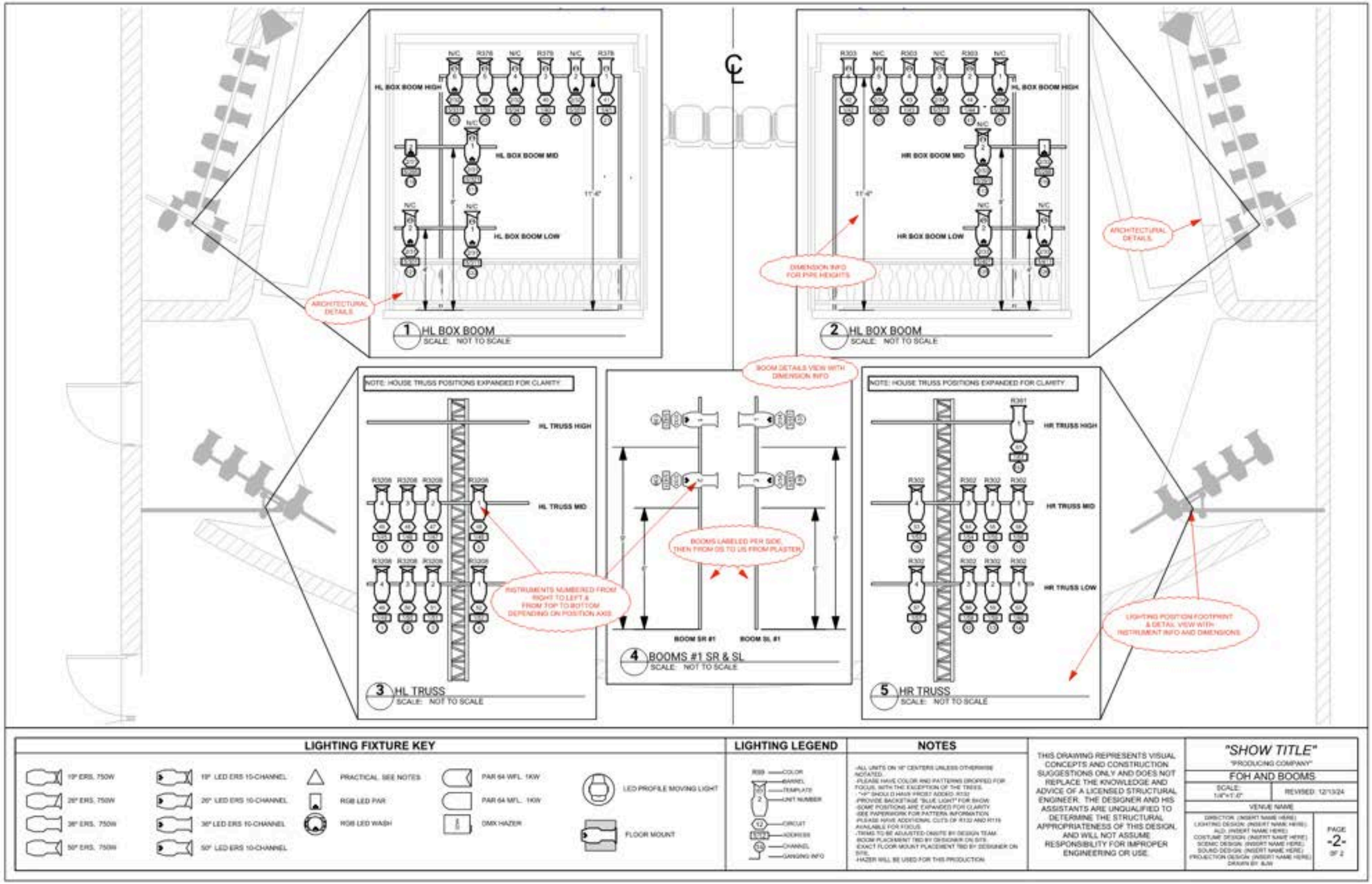

(Figure 3.1.4.0.2: Parts of a light plot - proscenium style)

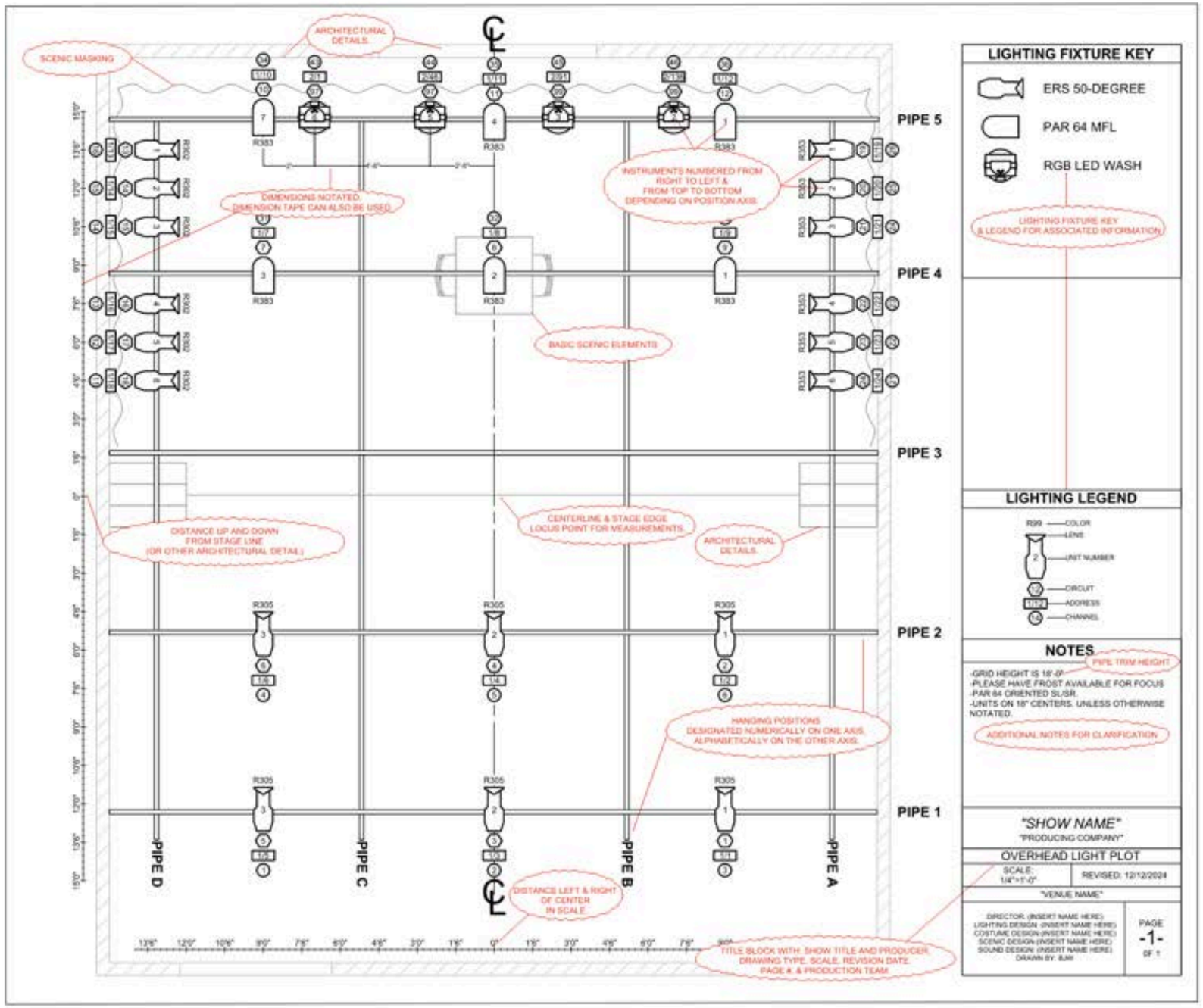

(Figure 3.1.4.0.3: Parts of a light plot - pipe grid style)

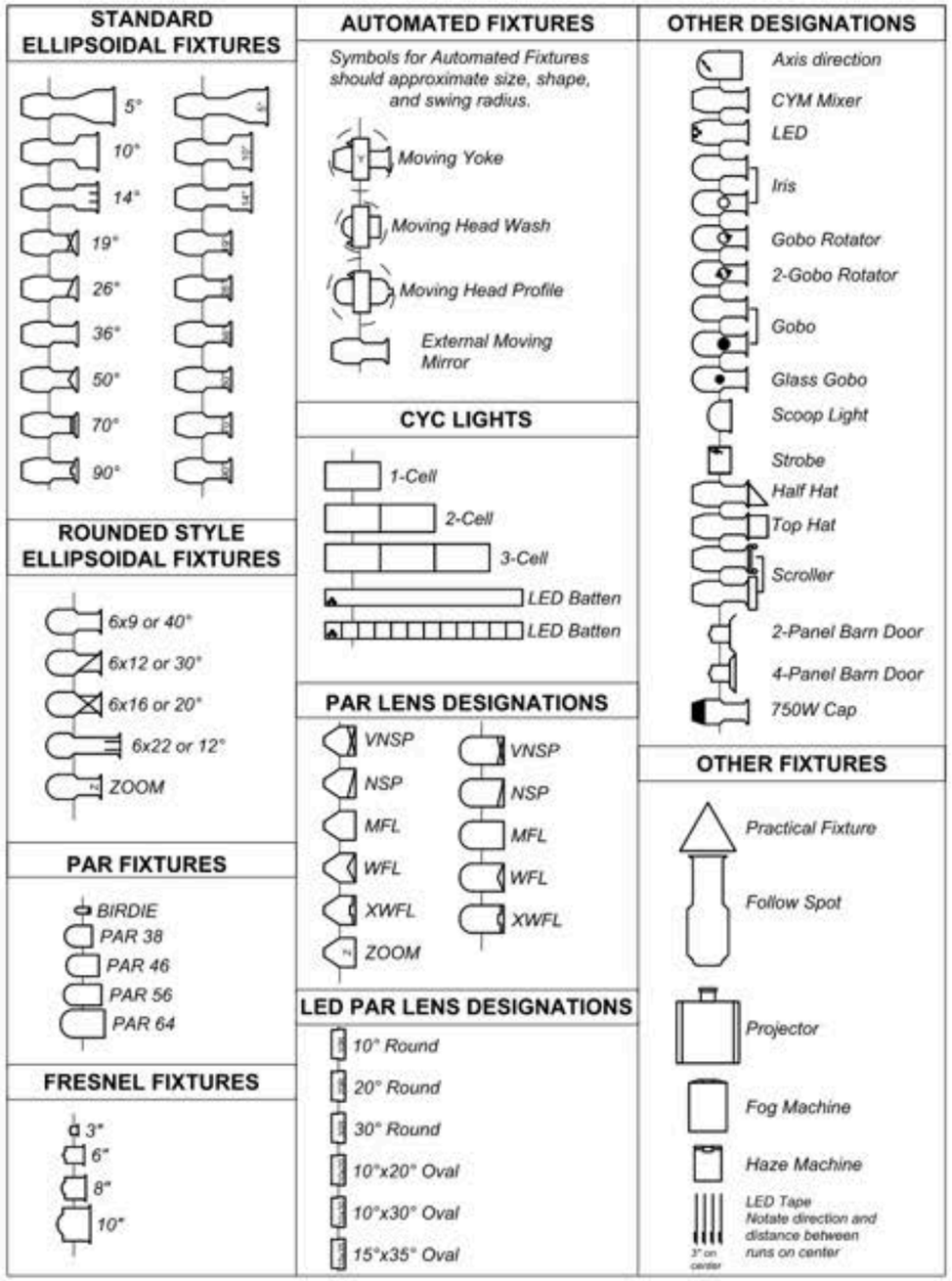

(Figure 3.1.4.0.4: Samples of lighting fixtures)

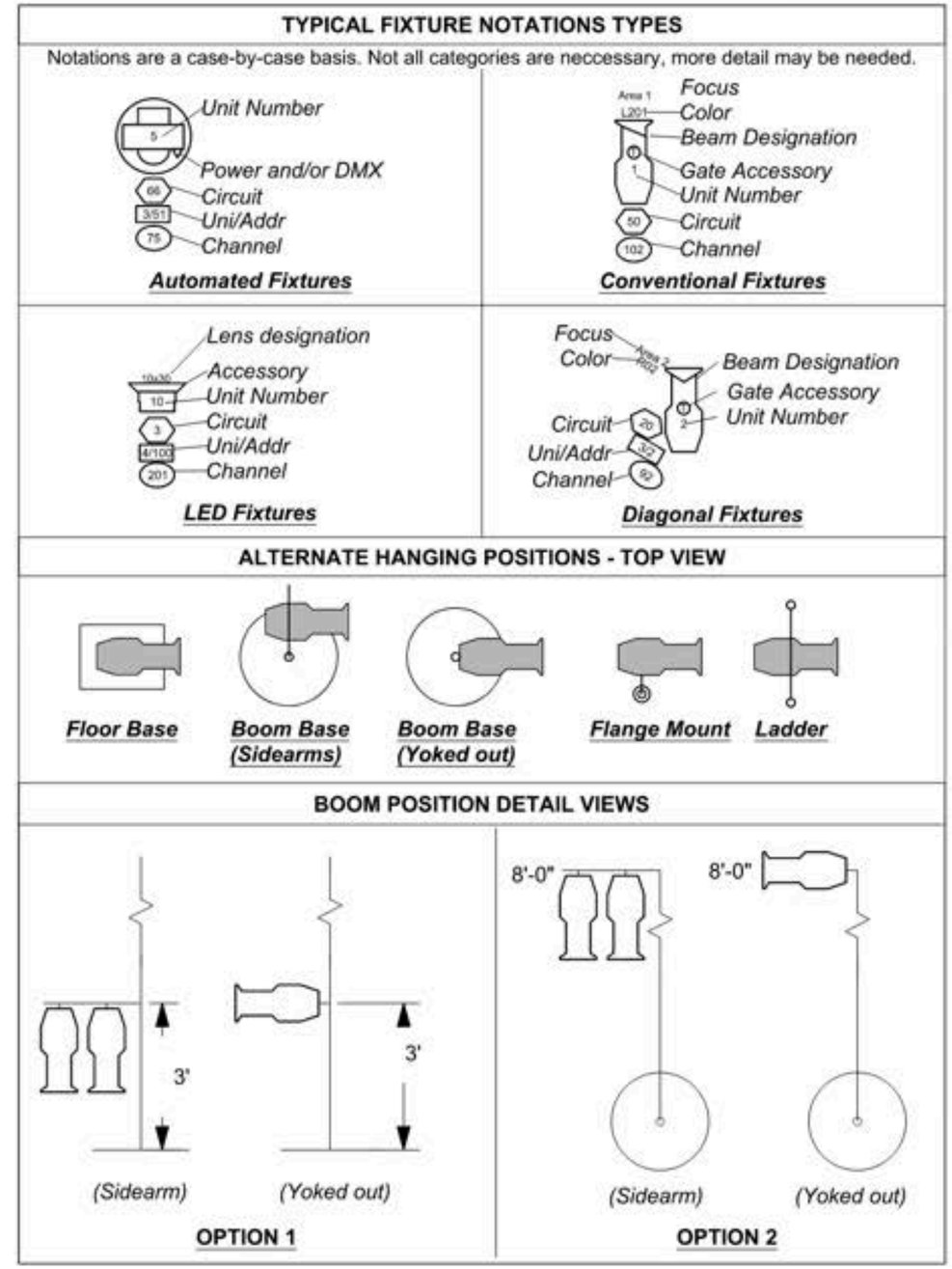

(Figure 3.1.4.0.5: Sample of fixture notations)

3.2 The Lighting Section & Elevation

The Lighting Section is a side elevation view in which the cutting plane intersects the theatre, typically along the centerline, however it may intersect any plane that best illustrates the mounting positions. This drawing provides a descriptive view of the hanging positions relative to the architectural and scenic elements of the production. While it may be appropriate to compress distance (horizontal or vertical) in a presentational section, doing so in the working version reduces its effectiveness.

3.2.1 Information Contained in the Lighting Section

The purpose of the lighting section is to communicate spatial information and relationships of all other elements relative to the lighting design. The following information should be represented on the lighting section:

- Definition of where the section is "cut"
- Stage floor, deck, or "vertical zero" location (indication of which one is used as reference zero)
- Proscenium, plaster line, smoke pocket, or the "horizontal zero" location
- Back wall or upstage limitation of the performing space
- Vertical audience sight points and/or sightlines
- Downstage edge of stage floor and/or edge of playing area
- Architectural details necessary to orient the lighting design in non-proscenium spaces
- All hanging positions including side elevation of booms, ladders, etc.
- Trim height for all hanging positions that can change height, including multiple playing heights
- Identification of all lighting positions
- Architectural and scenic obstructions
- Sectional view of scenery
- All masking
- Title block (See Section 2.2.6)
- Scaled representation of the instruments that determines batten height mounted in each position
- Human figure (or "head height") in scale
- The orchestra pit and its height position (or positions), as applicable

Additional information may include:

- Vertical indicator of distance in scale
- Horizontal indicator of distance in scale
- Defined distance to other elements not shown on the drawing ("Actual Throw Distance") to follow spot locations, or to other sightlines, etc.
- Beam spreads for specific instruments showing overlap of system focus from different hanging positions.

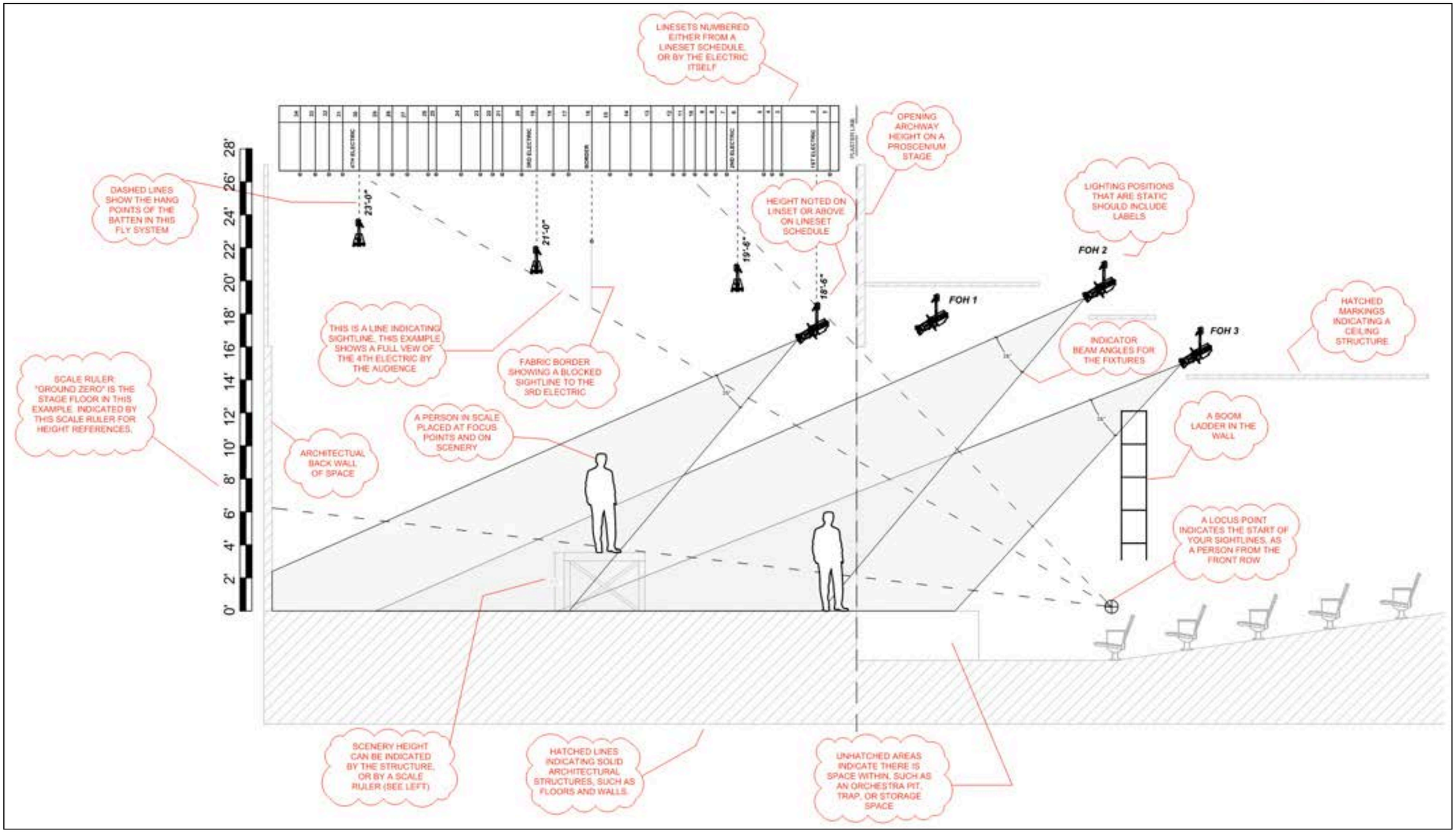

(Figure 3.2.1.0.1: Parts of a lighting section)

3.3 Lighting Design Paperwork

The text based documents typically included with the light plot and lighting section are often called "paperwork." Different production teams may require different paperwork. The minimum requirement for lighting design paperwork includes an instrument schedule, channel hookup, and shop order.

All paperwork includes similar information about each lighting instrument, organized in different ways. Instrument number, hanging position, circuit number, circuit name, dimmer number, channel number, DMX assignment, gel color designation, focus area or focus point, gobo designation, wattage, voltage, and the like are examples.

3.3.1 Instrument Schedule

Instrument Schedule paperwork is organized by hanging position, followed by instrument unit number. All of the above information about each light is included.

LD: [Designer Name]
ALD: [Designer Name]

[Show Name] Instrument Schedule
[Production Company]

Revision Date
Lead Electrician

Position	Unit	Instrument	Chan	Univ	Addr	Color	Color2	Gobo
Boom 2 SL	1	ETC Source4 36deg	355	1	144	R99		R71043
	2	ETC Source4 LED2LS 50deg	366	2	186	R119		
	3	ETC Source4 70deg	181	1	146			
	4	ETC Source4 36deg	356	1	143	R99		R71043
Boom 2 SR	1	ETC Source4 36deg	352	1	167	R99		R71043
	2	ETC Source4 LED2LS 50deg	364	2	166	R119		
	3	ETC Source4 70deg	181	1	164			
	4	ETC Source4 36deg	353	1	168	R99		R71043
Cat 2 Lower	1	ETC Source4 26deg	110	1	77	R53	R119	
	2	ETC Source4 19deg	115	1	76	R53	R119	
	3	ETC Source4 26deg	109	1	75	R53	R119	

(Figure 3.3.1.0.1: Instrument Schedule Sample.)

3.3.2 Channel Hookup

Channel Hookup paper work is organized by channel number, with all of the above information tracked for each light.

LD: [Designer Name]
ALD: [Designer Name]

[Show Name] Channel Hookup
[Production Company]

Revision Date
Lead Electrician

Chan	Univ	Addr	Instrument	Purpose	Watts	Position	Unit	Color	Color2	Gobo	Focus
1	3	312	Elation Seven PAR 19IP	Top	500 W	1st Electric	11				
2	3	282	Elation Seven PAR 19IP	Top	500 W	1st Electric	8				
3	3	253	Elation Seven PAR 19IP	Top	500 W	1st Electric	5				
4	3	297	Elation Seven PAR 19IP	Top	500 W	1st Electric	10				
5	3	267	Elation Seven PAR 19IP	Top	500 W	1st Electric	7				
6	3	237	Elation Seven PAR 19IP	Top	500 W	1st Electric	4				
7	4	149	Elation Seven PAR 19IP	Top	500 W	2nd Electric	16				
8	4	134	Elation Seven PAR 19IP	Top	500 W	2nd Electric	13				
9	4	119	Elation Seven PAR 19IP	Top	500 W	2nd Electric	9				
10	4	376	Elation Seven PAR 19IP	Top	500 W	3rd Electric	16				

(Figure 3.3.2.0.1: Channel Hookup Sample.)

3.3.3 Circuit Schedule

A circuit schedule is a table listed by circuit number illustrating all units powered by the respective circuits.

[Name of Show]
Circuit # Hookup

Page X of Y
Revision Dates
Filename.file

Cir#	Dim	Adr	Chan	Position	Inst Type & Access & Load	Clr & Gbo	U#
20	50	56	(1)	Balcony Rail	Source 4 26deg 575w	R02	3
53			(42)	Pipe 1	Wybron Forerunner 4		34
	31	31	(42)	Pipe 1	Source 4 36deg 575w		34
54			(41)	Pipe 1	Wybron Forerunner 4		31
	36	30	(41)	Pipe 1	Source 4 50deg 575w		31
55	16	16	(71)	Pipe 1	Source 4 36deg 575w	R02	20
56	32	32	(81)	Pipe 1	Alt 360Q 6x9 750w	R02	32

(Figure 3.3.3.0.1: Circuit Schedule Sample)

3.3.4 Address Schedule

An address schedule is a list of every address used and what fixture and its location corresponds to which address. It may also illustrate universe assignments for multiple universes used in various locations.

[Rep Plot]
DMX Address Hookup

Page X of Y
Revision Date
Rep_Final.file

Address	Chan	Position	U#	Inst Type & Access & Load	Purpose	Clr & Gbo
1/167	(121)	1st Electric	75	ETC S4 26° 750w		R132
1/168	(122)	1st Electric	76	ETC S4 26° 750w		R132
1/169	(123)	1st Electric	77	ETC S4 36° 750w		R132
1/173	(208)	1st Electric	72	ETC S4 50° 750w	S/P	
1/174	(43)	1st Electric	74	ETC S4 PAR WFL 575w	WRX	
1/175	(20)	1st Electric	73	ETC S4 36° 750w	O	R132

(Figure 3.3.4.0.1: Address Schedule Sample)

3.3.5 Shop Order or Equipment List

A shop order is an equipment list. A shop order defines needed instrumentation, accessories, color, gobos (or templates), dimmer and control equipment, hanging positions not native to the performance space, cabling, and anything else needed to accomplish the lighting design. This paperwork might be broken down to reflect items the producing theatre, or venue, has in stock. This list also specifies additional rentals needed, or recognizes a full rental package going into the venue. Each and every piece of equipment needed would be indicated on the shop order. The shop order might be organized by hanging position or by instrument inventory, as long as all needed items are specified. (Reference plate TL-16 in full package sample at the end of this document for a shop order sample.)

3.4 Other Lighting Design Documentation

When lighting designs become more complex, additional documentation may be necessary to adequately communicate all components of the lighting design. Additional plan, section, elevation, and/or detail drawings may be needed to document the following example situations as well as others.

- The addition of lighting equipment to scenery.
- The use of multiple LEDs or other small light emitters distributed on stage or in the front of house.
- The addition of new lighting positions in a performance venue.
- Extensive use of booms or ladders beyond what can fit on a light plot.
- Hanging pendant lighting fixtures or other fixture types suspended at different heights above the stage.
- Documenting multiple lighting instruments at stage level.
- Designing a lighting rig that moves or changes configurations during the performance

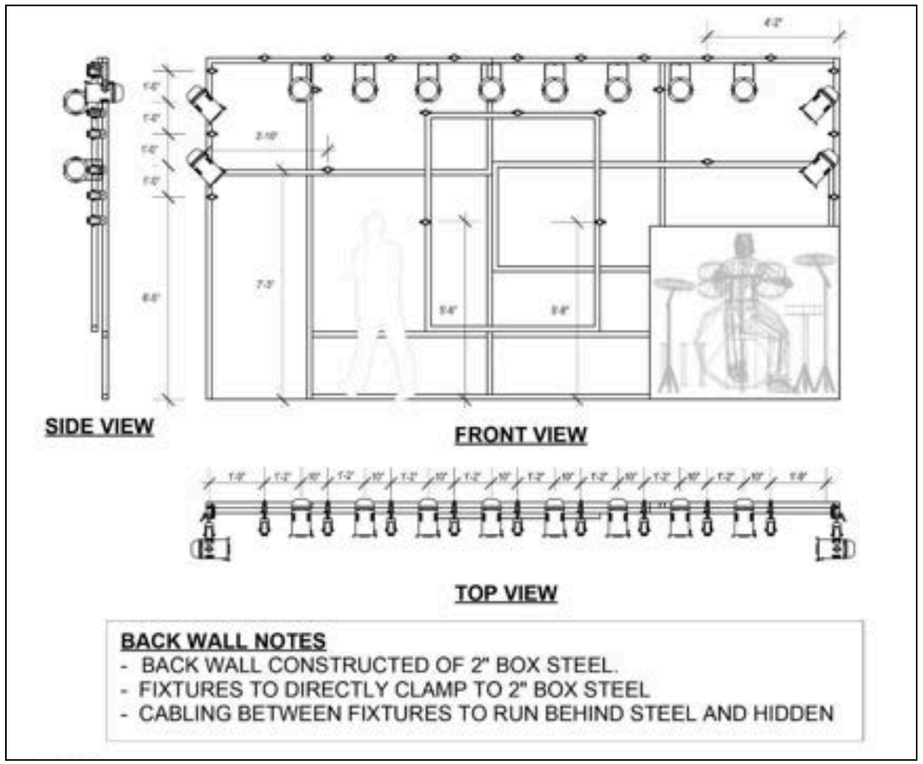

(Figure 3.4.0.1: Set Electrics detail)

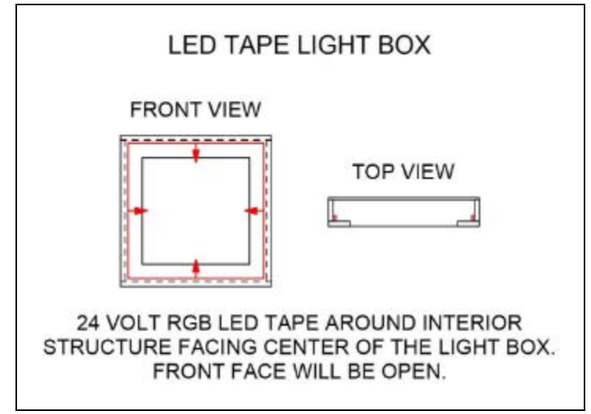

(Figure 3.4.0.2: LED tape detail)

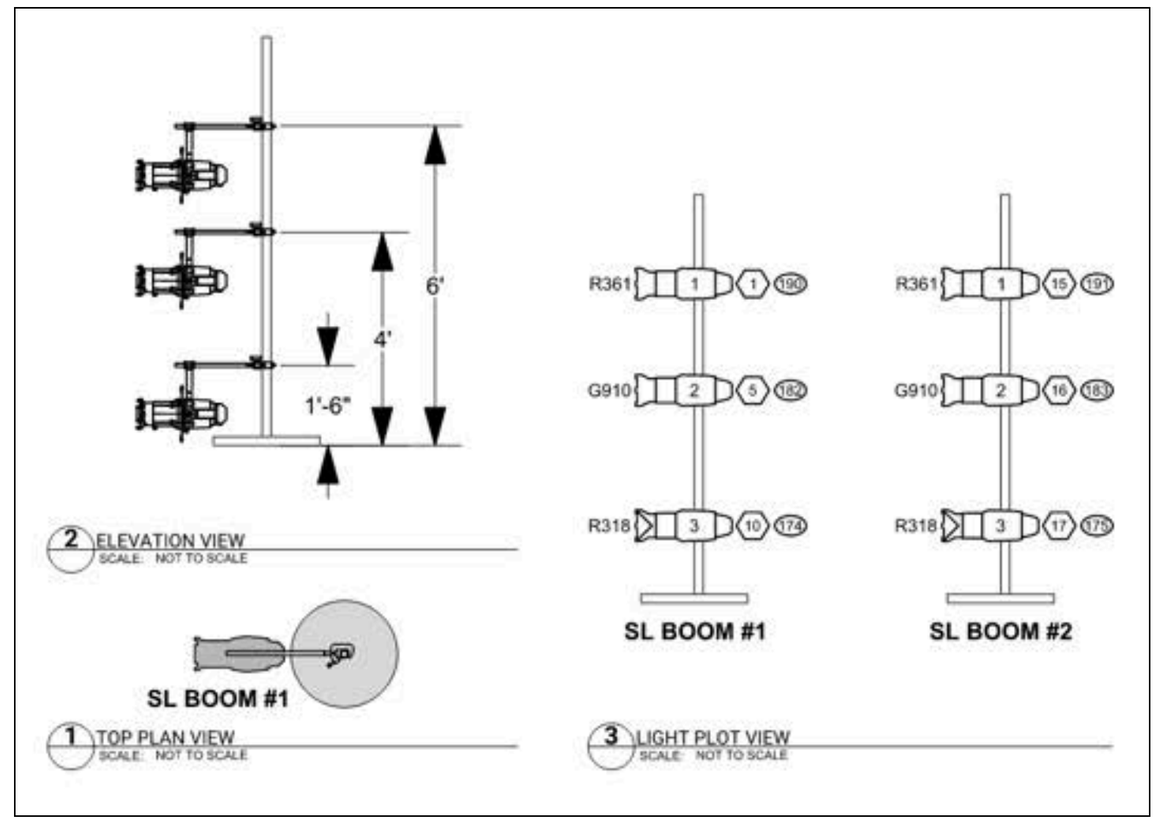

(Figure 3.4.0.3: Boom plate/detail)

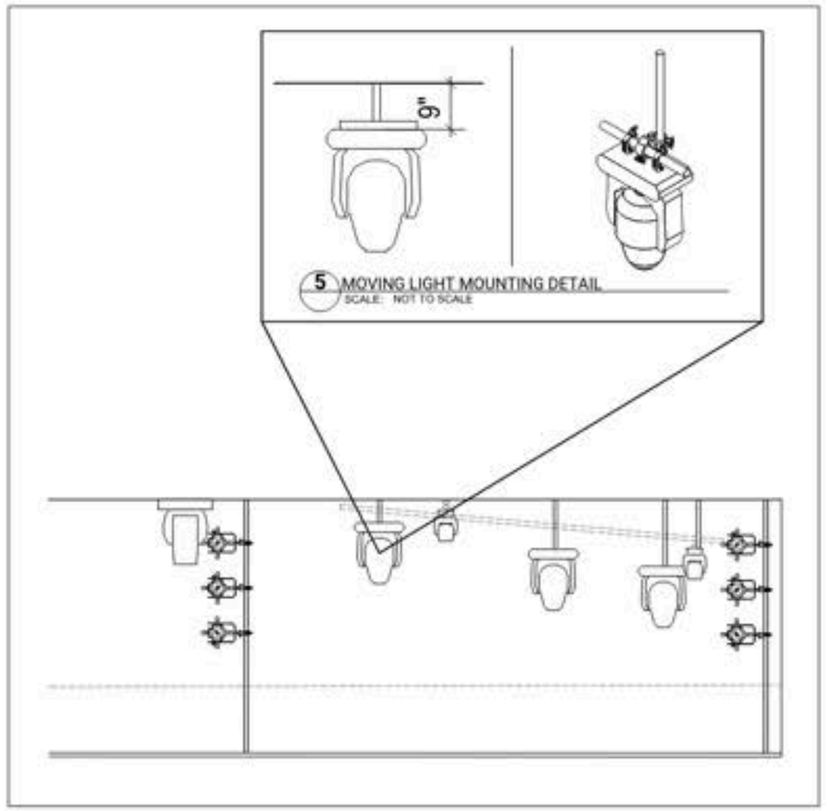

(Figure 3.4.0.4: Lighting mounting detail)

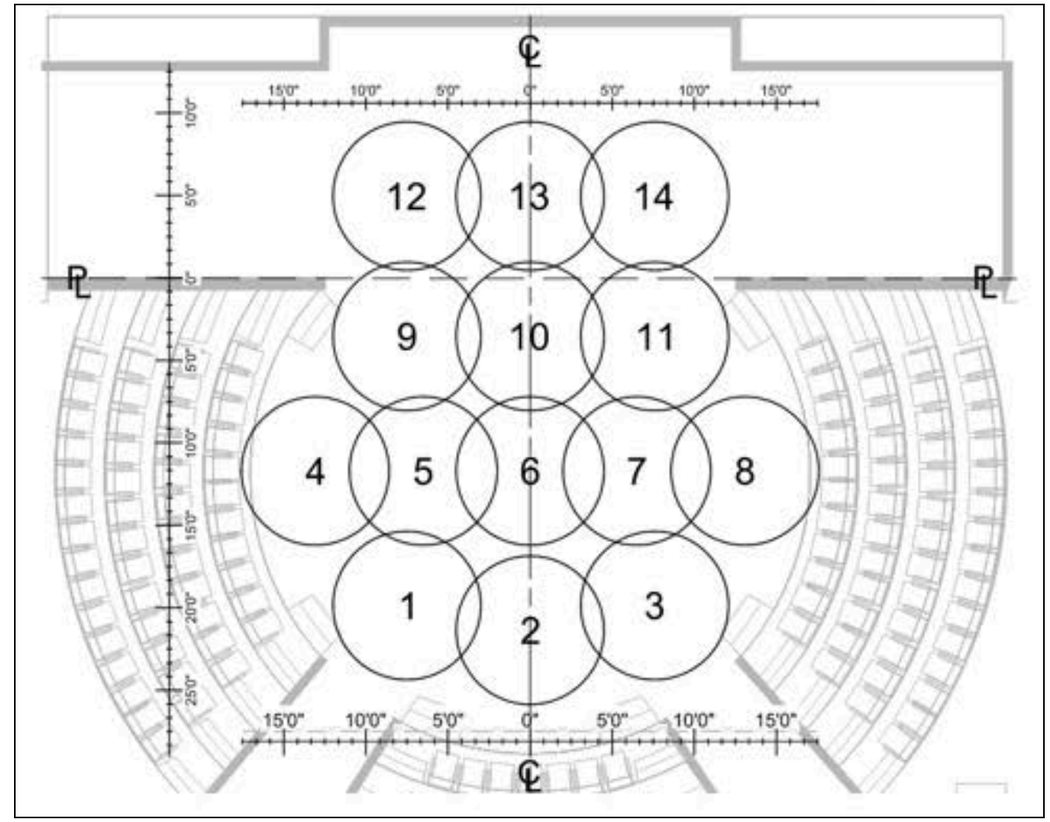

(Figure 3.4.0.5: Focus Point Layout)

4 LIGHTING CONTROL SYSTEM DOCUMENTATION

Modern lighting designs can be broken down into three broad equipment categories: lighting instruments and effects, power distribution, and lighting control and data distribution. While a light plot and instrument schedule still provide sufficient documentation for how lighting instruments are circuited to power, newer lighting instruments require more complex control systems than in the past. Consequently, additional documentation is necessary. Section 4 provides guidance on documenting these control systems.

4.1 Lighting Control Systems and Networking

In lighting control systems, multiple different data transmission technologies are used. In this RP the words "lighting control network" or just "network" are used as catch-all terms for these different technologies.

A network is formed when devices, called hosts, are connected to exchange information. Lighting consoles and other devices that send control commands and the lighting instruments and other equipment that receive those commands are host devices. For host devices to communicate they need to be connected with pathways they can send data across. The cables and other equipment used to create the pathways can be called infrastructure.

It is a common practice in networking, including lighting control networks to connect multiple smaller networks together to create a larger interconnected network. In lighting control systems, a separate network can often be identified in one of two ways:

1. When different infrastructure technology is used to connect host devices together. Examples include DMX cables, Ethernet cables, and wireless transceivers.
2. When networks are partitioned via software so that one or more host devices are not able to communicate with other host devices on the same physical network. Examples of this include the use of different subnet masks and IP address ranges in an IPv4 network and the use of Virtual Local Area Networks (VLANs) within an ethernet switch.

It is important when designing and documenting networks to understand what parts of the lighting control system are on a different network.

4.2 Lighting Control System Documentation

This RP covers common lighting control network technologies currently in use however is not comprehensive. Users should consult manufacturer documentation and industry standards for additional information. For technologies not covered, use these recommendations as a model for creating documentation.

4.2.1 What to Document

Lighting control systems encompass all the devices connected via physical, wireless, or virtual means for controlling lighting equipment and transmitting data. This includes wired Ethernet, wireless networks, DMX512-A (ANSI E1.11) controlled equipment, and other equipment using show control technologies like MIDI or SMPTE ST:12-1 Timecode. The following list includes several types of equipment that may be included in system documentation when they are connected to the lighting network however it is not exhaustive. Anything used to send control signal of any kind, whether digital or analog, should be documented and accounted for.

Lighting Control Devices:

- Lighting Control Consoles
- Media Servers
- Computers
- Architectural Lighting Controllers
- Architectural Lighting Control Stations

Controlled Lighting Equipment:

- Lighting Instruments and effects equipment that require a control signal to operate

Power and Control Network Infrastructure Devices:

- Dimmer Racks
- Relay Panels
- LED Drivers
- Lighting control equipment racks
- Lighting control DIN enclosures
- Network switches
- Network routers
- Network hubs
- Patch panels
- Wireless access points
- DMX gateways or nodes
- DMX splitters or repeaters
- Wireless DMX transmitters and receivers
- Ethernet receptacle faceplates or jacks
- DMX receptacle faceplates

DMX, Ethernet, Fiber Optic, and any other cable types used to connect devices on the lighting network may be included on control system diagrams and some other document types however are not typically included on lighting device plans.

The information that needs to be documented for the devices listed above depends on the lighting control network technology used by the device and the purpose the device serves. A list of information that may need to be documented for different devices may be found in Section 4.5 "Device, Power, and Control Schedules".

4.2.2 Lighting Control System Documentation Software

When choosing software for creating lighting control network documentation, ensure the symbols used to represent lighting network equipment and the Device IDs are consistent throughout all show documentation. This is particularly important when different departments use the same network. If consistency is not possible, coordination is essential to avoid control network conflicts.

4.3 Lighting Device Plans

Lighting Device Plan drawings are similar to light plot drawings however they are used to show specific locations for power distribution and lighting control system equipment and do not include the lighting instruments and effects equipment included on the light plot. They are drawn in scale and show a ground plan view of the performance venue. They may be included as part of a stand-alone lighting system document package, to present information specifically focused on lighting network equipment locations, or when lighting control system equipment is located in performance venue areas that are not shown on a light plot.

4.3.1 Device Plan Drafting Recommendations

- Device plan drawings should be drawn over a background layer with enough venue architecture to identify lighting control device locations.
- Include room names and numbers.
- Use scaled symbols that include Device IDs for lighting control equipment. Other information fields may be included if desired.
- Position symbols as close as possible to actual device locations and include dimensions if exact placement is necessary.
- All lighting control devices and power and control network Infrastructure devices listed in Section 4.2.1 may be included on device plans, however Controlled Lighting Equipment are typically shown on light plots and not device plans.
- For network devices located in an equipment rack, draw a rack symbol and connect Device IDs for each device to the rack symbol with leader lines.

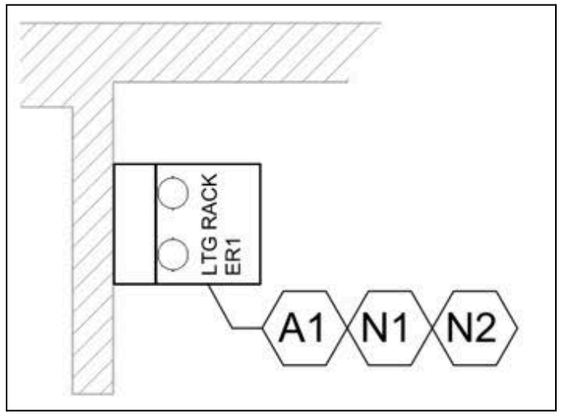

(Figure 4.3.1.0.1: Device location call out sample)

4.4 Lighting Control System Diagrams

Lighting control system diagrams or just system diagrams are used to show lighting devices that are connected to the lighting control network, the cables and other pathways between devices on the network, and the device settings and configurations that are required for each device to send/or receive data over the network. At least one system diagram should be included as part of the lighting documentation.

For new installations, include all lighting network infrastructure and permanently installed devices on system diagrams. For new productions in existing venues the documenter may choose to include only the relevant network infrastructure and devices for that production. At minimum, documentation should cover all impacted devices, such as DMX gateways and any new controlled devices.

If a network segment is unknown or undefined, represent it as a cloud in the documentation. Known network parts should be drawn normally and connect to the cloud, which should be labeled to describe the unknown portion.

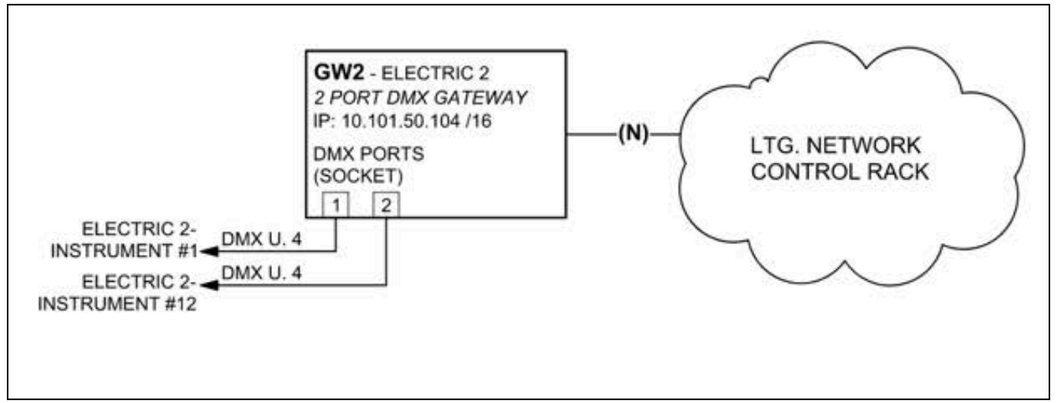

(Figure 4.4.0.1: Unknown Network Portion)

4.4.1 System Diagram Drafting Recommendations

- Do not include architecture or scenic backgrounds.
- Organize devices on system diagrams by general building locations, such as floors or venue areas (e.g., control booth, stage left, stage right).
- Arrange devices within each location together. Separate locations with thin dashed lines that divide areas with straight lines or enclose them in shapes.
- Label each location with a name. Include a room number if applicable.
- Cabling and all device types listed in Section 4.2.1 may be included on system diagrams.

When a lighting control system is large or complex, the system diagram may be broken into multiple drawings. This may be done when the full lighting network will not fit on one drawing sheet or to focus on a specific part of the lighting control system. Logical breakpoints for dividing system diagrams include:

- Different rooms or different building floors
- Transition point from permanent to show-specific network segments
- Transition point from one networking technology to another (e.g., DMX to Ethernet)
- Transition point from lighting network to lighting instruments on the network.
- Transition from network cable run to a lighting control rack to an intraconnect diagram showing cable connections to network equipment in the rack.

4.4.1.1 Lighting Instruments on System Diagrams

When sufficient lighting control network information for lighting instruments is included on light plot drawings, they do not need to be included on system diagrams. If included on system diagrams, for clarity, lighting instruments may be included on a separate system diagram from the rest of the network. A system diagram for lighting instruments includes:

- The network infrastructure device linking the instruments to the network. If the rest of the network is not shown include a fly-off symbol and connection information.
- The lighting instruments connected to that network segment, arranged in connection order.
- All cable connections between instruments and to the network.
- A termination device at the end of a dmx signal run, if applicable.

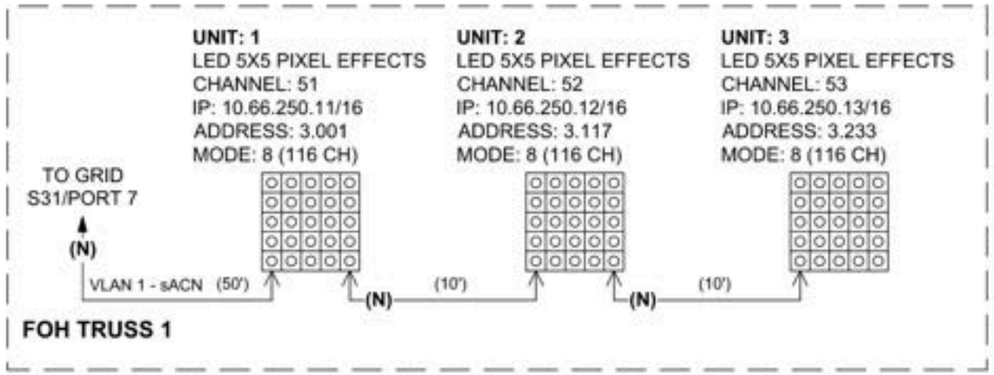

(Figure 4.4.1.1.0.1: Lighting fixtures shown on a system diagram)

4.4.2 System Diagram Symbols

Lighting control network device symbols on system diagrams should show cable connections to input/output (I/O) ports. Follow Section 2.2.8 and these guidelines for creating symbols:

- Include port numbers and/or graphic representations of I/O ports when there is more than one port on a network device. (See Figure 4.4.2.0.1)
- For devices with different I/O port types, include labels or different graphics for each type. (See Figure 4.4.2.0.2)
- For devices with SFP or other types of I/O ports that can be configured in multiple ways using different hardware, include a local note that specifies the required hardware and resulting port configuration. (See Figure 4.4.2.0.3)
- Port numbers and/or labels on symbols should match those on the actual device. (4.4.2.0.4)
- Symbols for patch panels should allow connections on both sides of an I/O port. (4.4.2.0.5)
- For devices with multiple I/O ports on both the front and back, use a symbol that shows both a front and back view. (See Figure 4.4.2.0.6)
- When a device has one or two I/O ports located on a different side from the rest of the I/O ports, the ports may be depicted on opposite edges of the symbol. (See Figure 4.4.2.0.7)
- I/O ports may not need to be shown on device symbols when:
    - There is only one I/O port on a device. (See Figure 4.4.2.0.8)
    - Cable connections are hardwired in a backbox.
    - Many network cables are routed to one location and a separate intraconnect diagram or per port list is provided instead. (See Figure 4.4.5.0.1 and 4.4.6.0.1.)

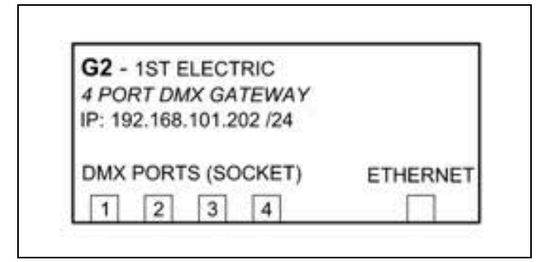

(Figure 4.4.2.0.1: I/O port representation.)

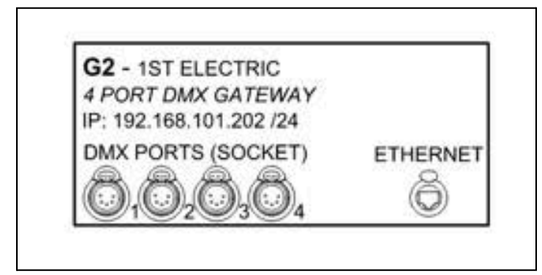

(Figure 4.4.2.0.2: Different I/O port types.)

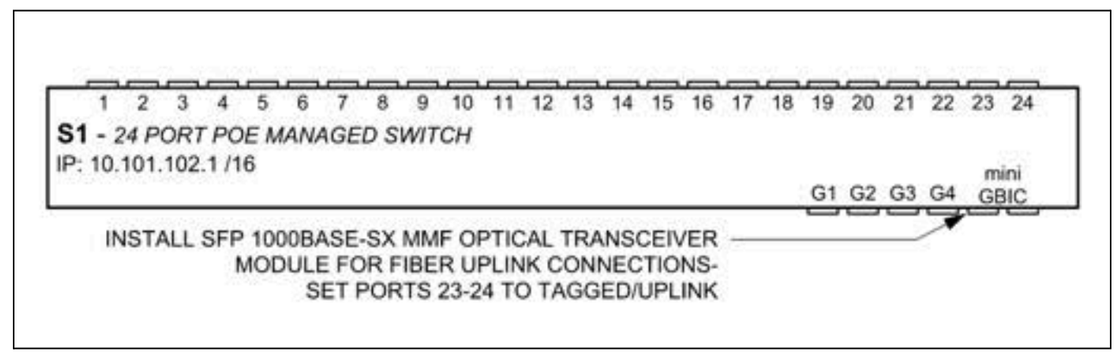

(Figure 4.4.2.0.3: SFP I/O port types.)

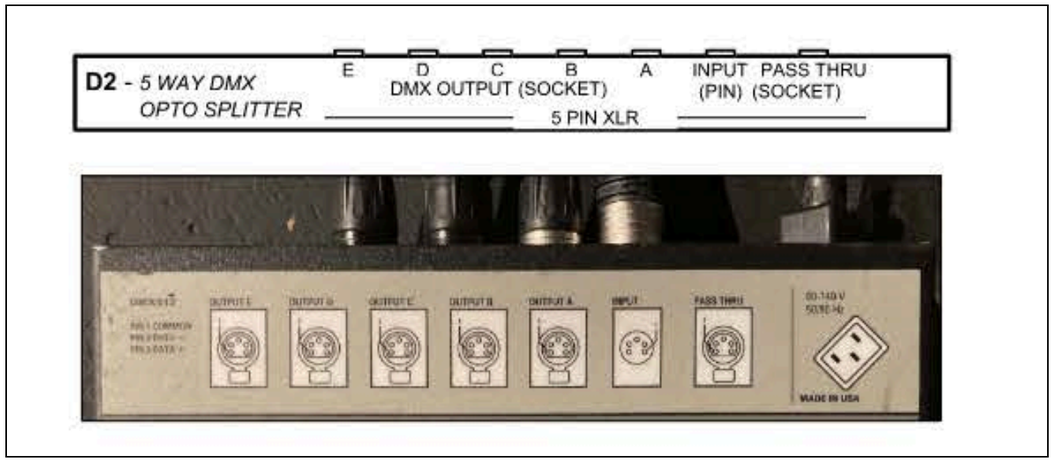

(Figure 4.4.2.0.4: Ports designation matching the actual device)

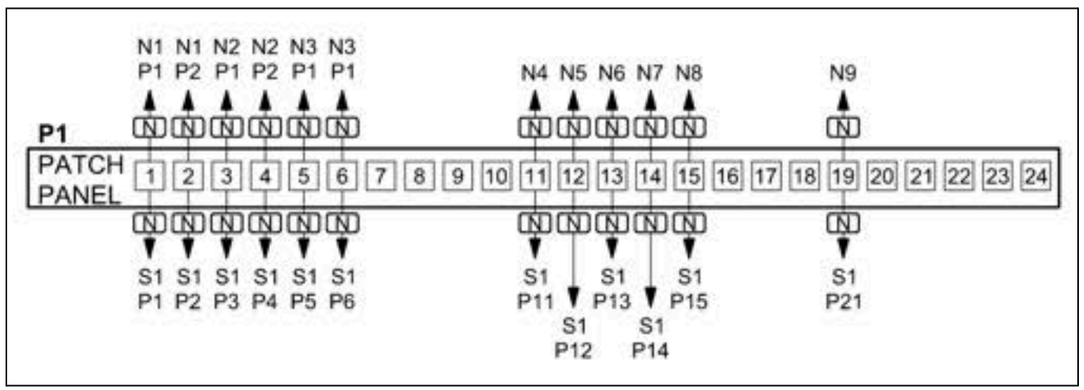

(Figure 4.4.2.0.5: Patch Panel symbol with connections on both sides)

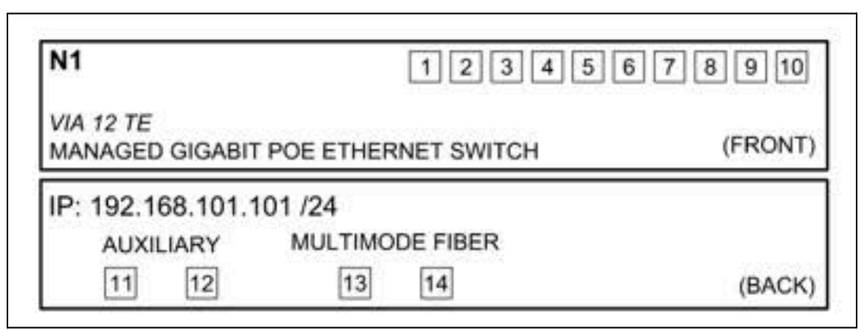

(Figure 4.4.2.0.6: Device symbol includes both a front and back view to show I/O ports on both sides of the device.)

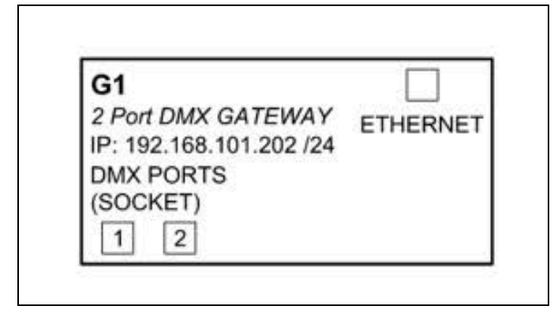

(Figure 4.4.2.0.7: Symbol showing front I/O ports on the bottom of the symbol and an I/O from the back of the device on the top of the symbol.)

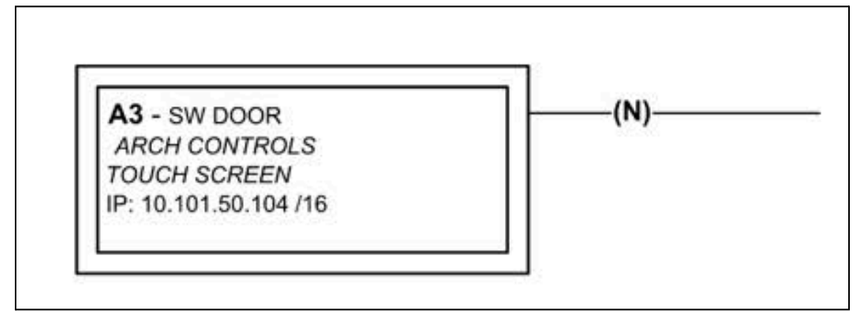

(Figure 4.4.2.0.8: Device with only one I/O port on a device.)

4.4.2.1 System Diagram Information Fields

Each symbol on system diagrams must include:

- Device ID
- Device manufacturer and model or a descriptive name (e.g., 2 Port DMX Gateway)
- Address details when applicable
  - DMX512-A devices: Universe number, start address
  - IPv4 devices: IP address and subnet mask. For brevity, the Classless Inter-Domain Routing (CIDR) notation may be used in place of the subnet mask (e.g., /16 or /24).
  - IPv6 devices: IP address written in condensed notation and the prefix length. The prefix length may also be written in CIDR notation.

Additional information fields may be included as needed. See Sections 4.4.7 and 4.5 for additional options.

4.4.3 System Diagram Cable Recommendations

All network cable connections between devices should be included on system diagrams. Follow these recommendations for showing cables:

- Use lines to represent cable connections between network devices.

- Draw cable lines connecting at right angles to each device symbol's perimeter at the appropriate I/O ports or using consistent spacing when I/O ports are not included.
- Use a different line thickness and/or line types for cable lines, typically thinner than the lines used for device symbols.
- Rounded corners can further distinguish cable lines from symbol lines.

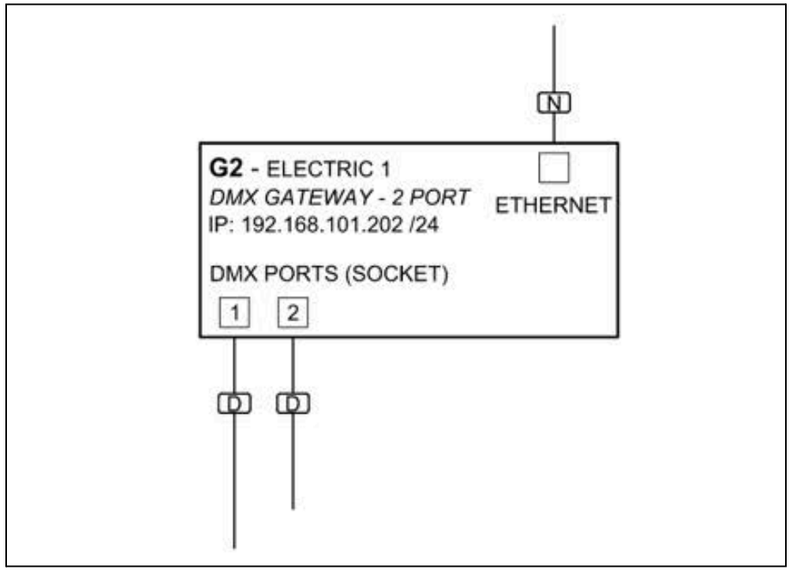

(Figure 4.4.3.0.1: Visual of different line weights)

4.4.3.1 Crossing Cable Lines

Avoid crossing cable lines; if unavoidable, cross at right angles. Use a semi-circle "jumping-over" or break line to clarify that crossing cables do not make contact.

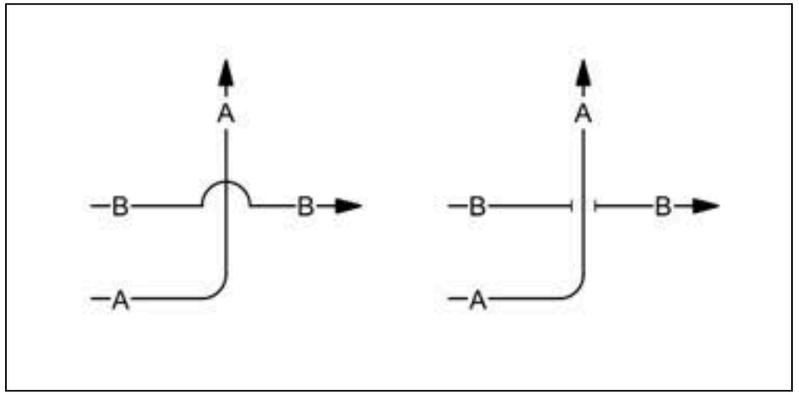

(Figure 4.4.3.1.0.1: Example of two methods used to show two cables crossing on system diagrams.)

4.4.3.2 Cable Labels & Information Fields

Identify each cable type using labels and/or different line types. Color may also be used in addition to labels and different line types but should not be used instead of them. Include an example of each cable type with a definition in the legend. Additional information about cables may be included as information fields next to the line or in the legend.(See Figure 4.4.3.2.1) The following information may be included:

- Cable ID number
- Cable connector type
- Cable length
- Special purpose (e.g., "backup" or "trunk line")
- VLAN, DMX Universe, Protocol type, or other information about the data traveling on a cable.
- Cable specification information or limitations
- Source or destination information
- Connected I/O port number (If the device symbol's I/O ports lack clear port numbers.).

Follow these recommendations for cable information field placement.

- Place cable information fields consistently for clarity.
- Locate I/O port connection numbers and connector type labels near connection points.
- Locate cable type and/or length labels spaced apart from connector labels. (See Figure 4.4.3.2.0.1).
- Position information fields adjacent to or within the cable line they refer to.
- Cable type labels may be enclosed in a simple container shape to add emphasis.

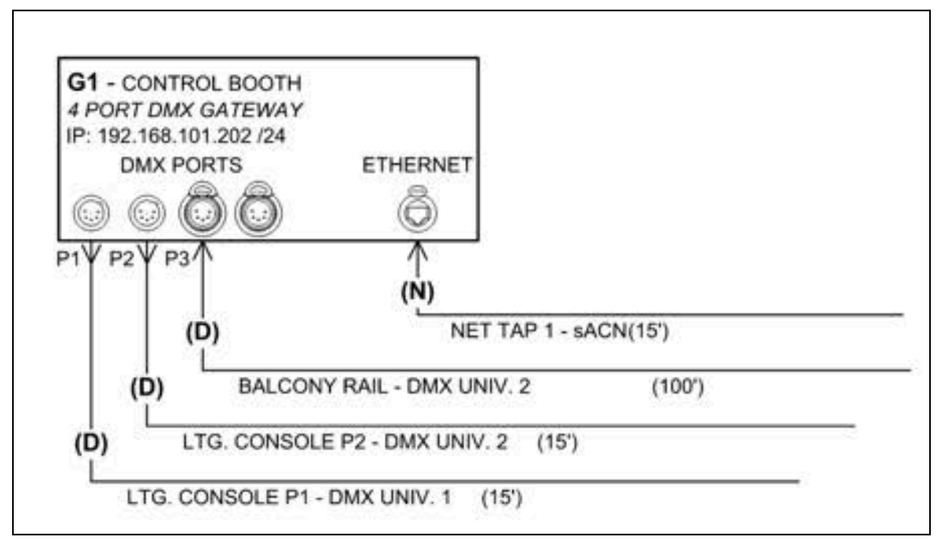

(Figure 4.4.3.2.0.1 - Examples of cables with labels and information fields on system diagram drawings)

4.4.3.3 Cable Connector Type

Document the termination method or connector type at the ends of each cable.

- Include connector information in the cable type definition in the label legend (See Figure 4.4.6.0.1).
- When the same type of cable is terminated with different connectors, create a different cable type on system diagrams for each variation, or add a note indicating the connector variation.

Follow these recommendations when identifying connector types on the ends of cables or I/O ports mounted on devices, panels, or face plates.

- Use “plug” or “pin end” for connectors with pins, and “socket” for connectors with holes (See Figure 4.4.2.0.4).
- Use “receptacle” or “jack” for mounted cable connection points. “Socket” may also be used when connectors with holes are mounted.
- Arrows may be used to show connector types: towards the device for pin ends, and away for sockets (See Figure 4.4.3.2.0.1).
- Graphic representations of connectors may also be used. (See Figure 4.4.3.3.0.1)
- Include the manufacturer’s designation for specialty connector types.

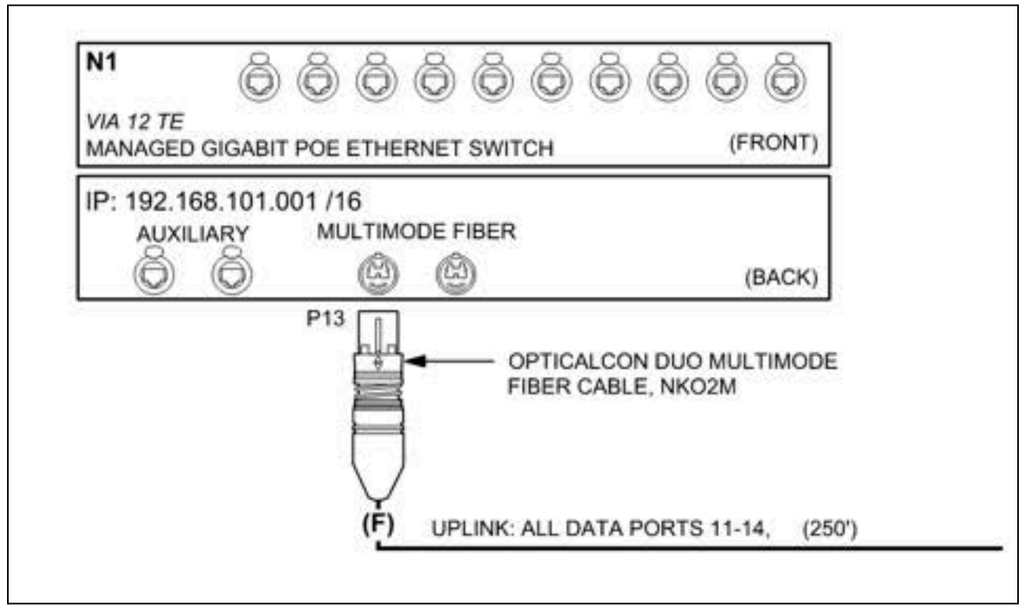

(Figure 4.4.3.3.0.1 - Example of the connector with note listing manufacturer’s part number for cable type)

When system diagrams span multiple drawings, use a "fly-off" symbol or perpendicular line to break cable lines at the division point.

- For a single cable, show the break with an arrow, short perpendicular line, or container shape enclosing cable destination device info. Include a note with the cable’s destination device ID, device name, connection I/O port number, and the drawing sheet and drawing number when applicable for the next part of the system diagram. At the cable destination device, include a fly-off symbol and the same note information for the cable’s origin device. (See Figure 4.4.3.3.0.2)
- When multiple cables with the same destination location span between two system diagrams break the cables at a long line and include a note with information on the cable’s destination device and where to find the system diagram that shows the cable’s destination device. This method is often used for lighting networks that include one or more equipment racks with patch panel(s) and network switch(es) that multiple lighting network devices are connected to. (See Figure 4.4.3.3.0.3 and related sections on Port List and Intraconnect Diagram)

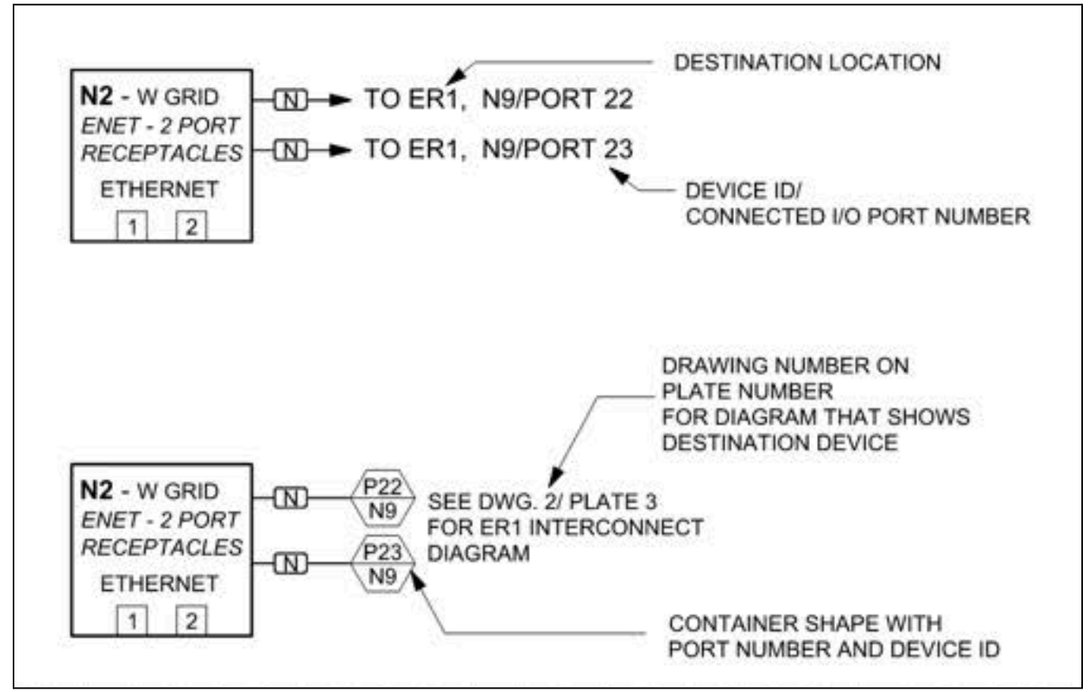

(Figure 4.4.3.3.0.2 – Example of fly-off symbol used to show where to find the other end of the cable.)

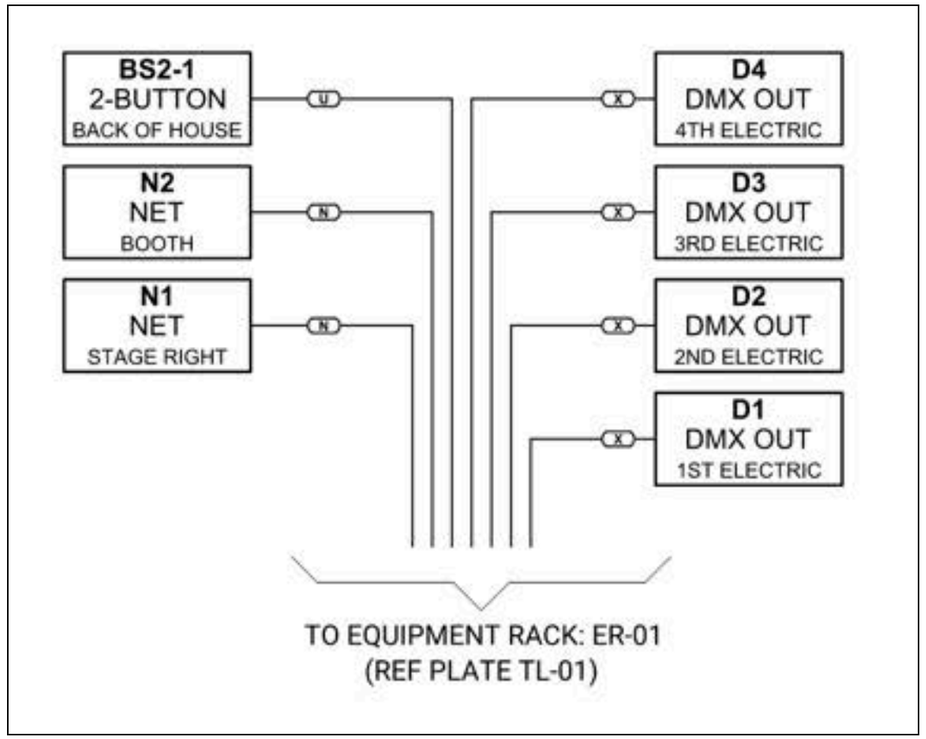

(Figure 4.4.3.3.0.3 – Example large break line showing that many cables are routed to the Equipment Rack.)
Graphic provided courtesy of Barbizon Lighting Company

4.4.4 VLANs, LAGs, and Uplink Ports

When Ethernet switches are set up to create VLANs, LAGs, Uplink Ports, or other specialty cable path configurations on one or more ports it is critical to document those ports and the cables connected to them on system diagrams.

- Label the Ethernet port(s) on the network switch with the VLAN, LAG, or Uplink Port they are assigned to. The ports may also be highlighted with different color overlays.
- Label any cables and other devices that are connected to those Ethernet ports with the appropriate VLAN, LAG, or Uplink Port. This may be done with labels, different line weights or line types, and/or color may be used in addition to labels.

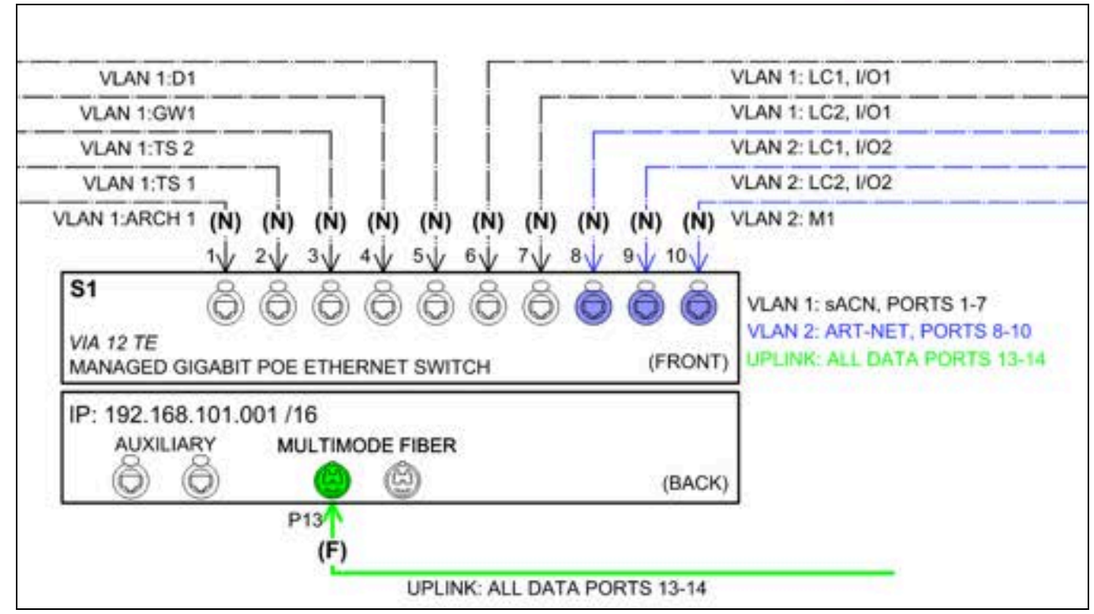

(Figure 4.4.4.0.1: Labeling ethernet ports with the VLAN they are assigned to. Color is also used to show the different VLAN port assignments and the cables are drawn with colored lines that match the color of the VLAN they are connected to.)

4.4.5 Intraconnect System Diagrams

An intraconnect is a system diagram that may be used to document a section of a lighting control network that includes a lot of cable connections in one location (e.g., network rack). To create an intraconnect system diagram:

- Include a symbol for each network device located in a network rack.
- Draw all cable connections to I/O ports.
- For cables extending outside the rack use a fly-off symbol with the device ID where the cable connects.

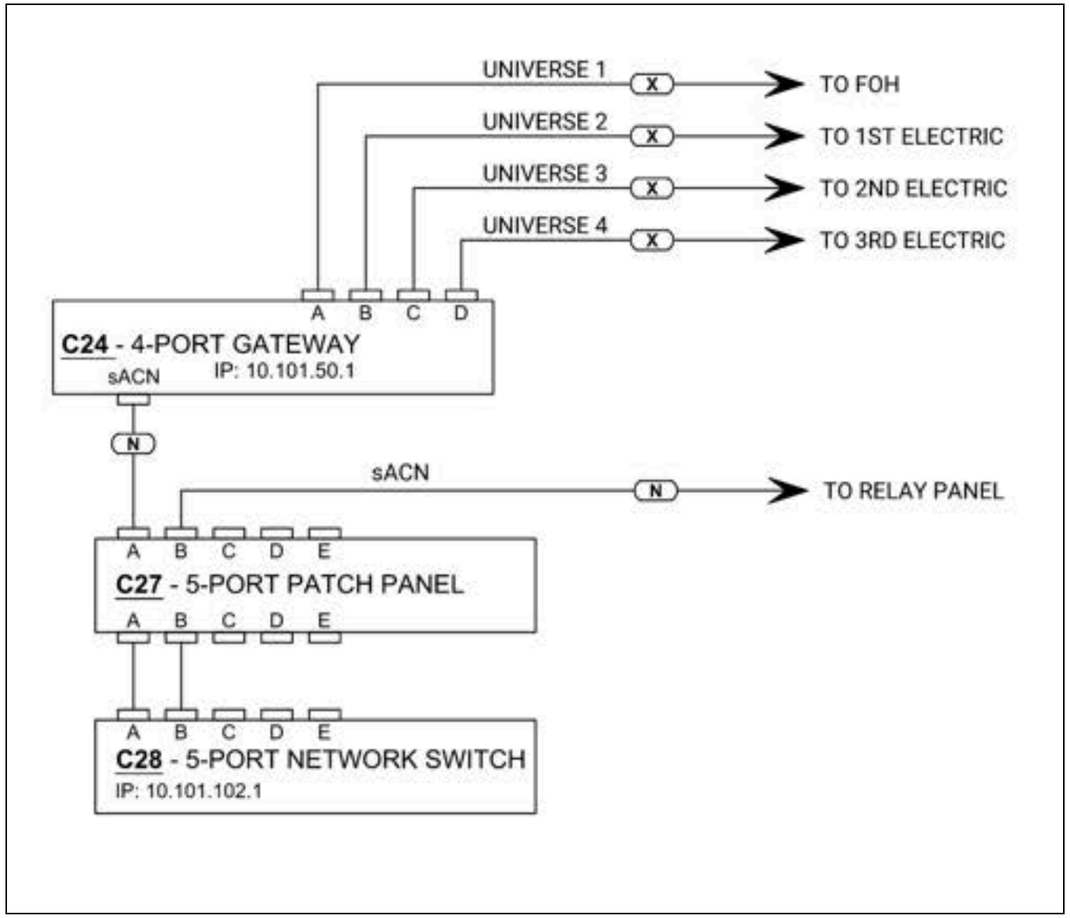

(Figure 4.4.5.0.1: A portion of an intraconnect type of system diagram showing network equipment in a rack and the cable path. Landing location notated outside of the equipment rack.) Graphic provided courtesy of Barbizon Lighting Company.

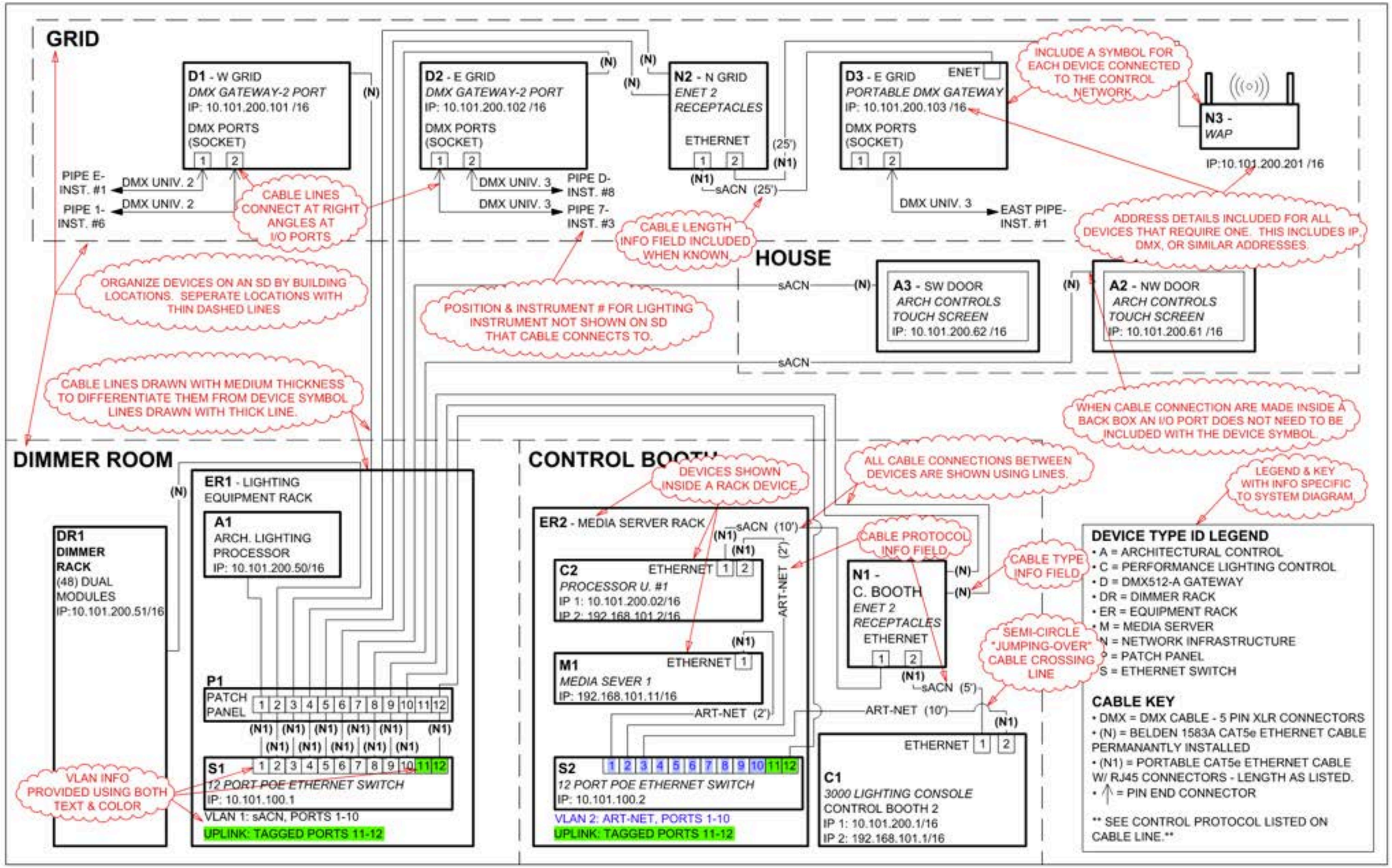

(Figure 4.4.6.0.1: Sample System Diagram)

4.4.7 System Diagram Symbol Examples

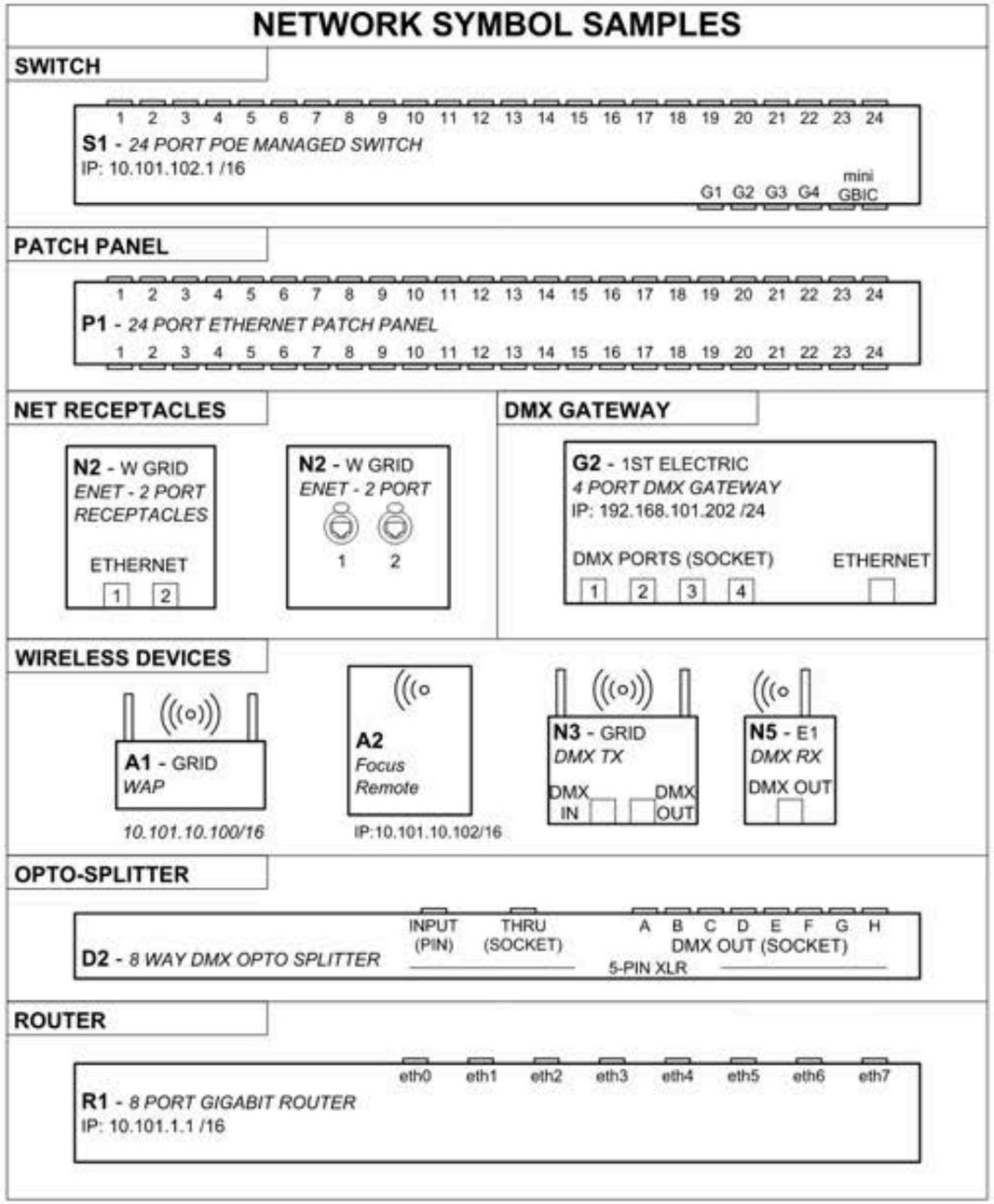

(Figure 4.4.7.0.1: Samples of symbols for network devices.)

4.5 Device, Power, and Control Schedules

Include one or more device schedules with lighting control system diagrams to provide detailed information on network devices, similar to the instrument schedule for a light plot.

Use a single device schedule for smaller systems or multiple schedules for larger, complex systems. When the focus of a device schedule is on a particular type of equipment or method of sorting equipment, it should be named to identify the specific purpose for the schedule.

At a minimum a device schedule should include

1. A column for the Device ID
2. A column for the device manufacturer (make) and model or a descriptive device type name (e.g., 2-Port DMX Gateway).

Additional information columns should be included based on the type of device schedule and project documentation needs. The following sections include the most common types of device schedules and a list of additional information that may be included on schedules for different types of equipment.

4.5.1 Device Schedules

In general, a device schedule provides a complete list of all lighting devices. The schedule is organized by Device IDs listed in the first column. The most common additional information column is for device location, however other information columns are often included based on project needs.

4.5.2 IP Address Schedule

An IP address schedule includes equipment that uses the IPv4 or IPv6 protocols. Additional information columns include IP address plus other information columns based on the protocol used.

IP ADDRESS SCHEDULE

DEVICE ID	DEVICE NAME	DESCRIPTION	PORT	IP ADDRESS	SUBNET MASK	ASSIGNED
C1	SW1	12-PORT POE NETWORK SWITCH	N/A	10.101.0.1	255.255.0.0	STATIC
C2	GW1	4-PORT DMX GATEWAY - FOH	1	10.101.50.###	255.255.0.0	DHCP
C3	GW2	4-PORT DMX GATEWAY - FLY GALLERY	1	10.101.50.###	255.255.0.0	DHCP
C4	GW3	4-PORT DMX GATEWAY - STAGE LEFT	1	10.101.50.###	255.255.0.0	DHCP
C11	LC1	LIGHTING CONTROL CONSOLE	1	10.101.100.30	255.255.0.0	STATIC
C11	LC1	LIGHTING CONTROL CONSOLE	2	192.168.0.11	255.255.0.0	STATIC
C12	MS1	MEDIA SERVER	1	192.168.0.12	255.255.0.0	STATIC
C21	ARCH1	ARCHITECTURAL LIGHTING CONTROL UNIT	1	10.101.10.101	255.255.0.0	STATIC
D1	DR1	DIMMER RACK (48) DUAL DENSITY MODULES	1	10.101.101.101	255.255.0.0	STATIC

(Figure 4.5.2.0.1: Sample IP Address Schedule.)

4.5.3 Lighting Fixture Control Schedule

A lighting fixture (or instrument) control schedule may be created for documenting lighting fixture control settings beyond those that can fit on a typical instrument schedule or channel hookup. A lighting fixture control schedule should include columns for:

- Lighting position and unit number
- Lighting instrument type
- Control channel

The following additional columns may be included based on the lighting control technology in use and equipment-specific settings. Other columns may be added as needed.

- Instrument operation mode or personality with required number of DMX slots in parenthesis
- DMX start address
- Universe
- Control protocol: DMX, sACN, Art-Net, etc.
- Subnet mask (May be written in CIDR notation)
- IP Address assignment method
- Cable connection type
- VLAN if applicable
- Synchronous mode settings
- Priority settings
- Art-Net specific settings: Port address (net + subnet + universe)

Lighting fixture control schedules may be organized by position and unit number, DMX Universe and start address, instrument type, control channel, or another category depending on project needs.

LIGHTING FIXTURE CONTROL SCHEDULE

POSITION	UNIT NUMBER	DMX MODE (FOOTPRINT)	CONTROL CHANNEL	DMX START ADDRESS	UNIVERSE	PROTOCOL TYPE	IP ASSIGN METHOD	IP ADDRESS/ SUBNET MASK	CABLE TYPE/ VLAN#	SYNC SETTING
ELEC 1	3	MODE 2 (24)	201	1	2	DMX	N/A	N/A	DMX	N/A
ELEC 1	11	MODE 2 (24)	203	49	2	DMX	N/A	N/A	DMX	N/A
FOH 1	1	MODE 1 (36)	101	1	3	DMX	N/A	N/A	DMX	N/A
FOH 1	2	MODE 5 (116)	301	1	4	sACN	STATIC	10.1.1.1/16	CAT6 / 2	POWER LINE
FOH 1	6	MODE 1 (36)	102	37	3	DMX	N/A	N/A	DMX	N/A
FOH 1	7	MODE 5 (116)	302	117	4	sACN	STATIC	10.1.1.2/16	CAT6 / 2	POWER LINE
FOH 1	11	MODE 1 (36)	103	73	3	DMX	N/A	N/A	DMX	N/A
FOH 1	12	MODE 5 (116)	303	233	4	sACN	STATIC	10.1.1.3/16	CAT6 / 2	POWER LINE

(Figure 4.5.3.0.1: Sample of Lighting Fixture Control Schedule)

4.5.4 Patch Panel Schedule

Physical connection of network cable runs are typically accomplished through the use of patch panels. A patch panel schedule should be created for each patch panel in the lighting control system. Each patch panel should be assigned a device ID and may be given a name. Patch panel schedules document the required patch connections and may include the following additional information columns:

- Source Port
- Destination Port
- Connected Device
- Cable Information

PATCH PANEL #1 SCHEDULE

PORT #	SOURCE DEVICE - I/O PORT #	DESTINATION DEVICE I/O PORT #	CONNECTED DEVICE	PATCH CABLE
1	C2-P1	S1-P1	GW1	CAT6-18"
2	C3-P1	S1-P2	GW2	CAT6-18"
3	C4-P1	S1-P3	GW3	CAT6-18"
4	C5-P1	S1-P4	LC1	CAT6-18"
5	C5-P2	S1-P5	LC1	CAT6-18"
6	C6-P1	S1-P6	MS1	CAT6-18"
7	C7-P1	S1-P7	OPEN	CAT6-18"
8	C8-P1	S1-P8	OPEN	CAT6-18"
9	C9-P1	S1-P9	OPEN	CAT6-18"
10	C9-P2	S1-P10	OPEN	CAT6-18"
11	C21-P1	S1-P11	ARCH1	CAT6-18"
12	D1-P1	S1-P12	DR1	CAT6-18"

(Figure 4.5.4.0.1: Samples of Patch Panel Schedule)

4.5.5 Port Lists Schedule

Another method for documenting devices with several I/O port connections is to create a Port List. Use a Port List for Ethernet Switch I/O ports.

- Create one list or schedule for each device.
- Include each port number sequentially in the first column.
- Add additional columns for each desired information field.
- When a port list is included with system diagrams, draw a cable line with a fly off from each device symbol with a note on what device represented by a port list the cable is connected to.

Lists or schedules may be placed on the same drawing sheet as the system diagram or may be included on sheets with detail drawings and schedules.

S1 PORT LIST - 12-PORT POE SWITCH - 10.101.102.1/16

PORT #	CONNECTED DEVICE ID	DESCRIPTION	VLAN	PROTOCOL
1	ARCH 1	ARCHITECTURAL LTG PROCESSOR	1	sACN
2	TS 1	ARCHITECTURAL LTG TOUCHSCREEN 1	1	sACN
3	TS 2	ARCHITECTURAL LTG TOUCHSCREEN 2	1	sACN
4	GW 1	DMX GATEWAY 4-PORT FOH1	1	sACN
5	D1	DIMMER RACK 1	1	sACN
6	LC1	MAIN LTG CONSOLE I/O 1	1	sACN
7	LC2	BACKUP LTG CONSOLE I/O 1	1	sACN
8	LC1	MAIN LTG CONSOLE I/O 2	2	ART-NET
9	LC2	BACKUP LTG CONSOLE I/O 2	2	ART-NET
10	M1	MEDIA SERVER	2	ART-NET
11				
12				
13	S2	SWITCH 2 UPLINK	ALL DATAPORTS	
14	S2	SWITCH 2 UPLINK	ALL DATAPORTS	

(Figure 4.5.5.0.1: Example of Port List.)

4.5.6 Additional Information Columns Based on Equipment Type

The following list of information for different types of lighting equipment may be included on device schedules and/or included as information fields on lighting documentation drawings:

4.5.6.1 General Information for All Device Types

- Device ID
- Device type or descriptive device name
- Make and Model
- Serial Number
- Location

4.5.6.2 Devices Using IPv4 or IPv6 Technology

- Host name
- Runs IPv4 and/or IPv6
  - IPv4
    - Config type
    - DHCP
    - Static
    - Auto-Config
    - IP Address
    - Subnet Mask
    - Gateway
    - MAC Address
  - IPv6
    - IPv6 Prefix
    - IPv6 Router(s)
    - Config type
    - DHCPv6
    - SLAAC
    - Static
    - MAC Address

4.5.6.3 Wired Ethernet Network Infrastructure

- Routers
  - Interfaces
    - IP Address Info
    - Routing information
    - DHCP Server information
  - Protocol filtering
    - Protocol based VLANs
    - Protocol / IP port routing between VLANs
- Switches
  - Ports
    - Connected Devices
    - VLANs
    - LAG Ports
    - Uplink Ports
    - RSTP
    - Off/On
    - EAPS
      - Off/On
      - Master or Transit
    - Fiber
      - Single or Multimode
      - Connector type
      - Transceiver information
    - Copper
      - Min. cable category requirement
      - Max. cable length
    - Speed (100 mbit/s, 1000 mbit/s, auto, etc.)

4.5.6.4 Wi-Fi Network Infrastructure

- Wireless Access Points
  - AP mode (bridge, router, etc.)
  - Frequency
  - Channel
  - Wi-Fi SSID
  - Passwords (provided securely in encrypted format)
  - DHCP range
  - Access Control List setup

- Wireless devices
  - Purpose/Name
  - IP address
  - MAC address

4.5.6.5 Wireless DMX Infrastructure

Wireless DMX

- Transmitter or Receiver (TX or RX)
  - Universe
  - Frequency
  - Antenna information (when applicable)
  - Other settings based on equipment make and model

4.5.7 Panel Schedules

A panel schedule illustrates the power distribution from a device (such as a relay panel or dimmer rack) across a space to distribution receptacles (such as outlet boxes or connector strip raceways).

LOCATION DIMMER ROOM
MOUNTING SURFACE

RP-1

120/208 VOLTAGE
3-PH, 4W WIRE
22,000 A.I.C.

100A MAIN BREAKER

TYPE	kVA A	kVA B	kVA C	DIRECTORY	BKR	CKT	A | B | C	CKT	BKR	DIRECTORY	kVA A	kVA B	kVA C	TYPE
M	-	-	-	FOH	20/1	1	A | |	2	20/1	FOH	-	-	-	M
M	-	-	-	FOH	20/1	3	| B |	4	20/1	FOH	-	-	-	M
M	-	-	-	1ST ELECTRIC	20/1	5	| | C	6	20/1	1ST ELECTRIC	-	-	-	M
M	-	-	-	1ST ELECTRIC	20/1	7	A | |	8	20/1	1ST ELECTRIC	-	-	-	M
M	-	-	-	2ND ELECTRIC	20/1	9	| B |	10	20/1	2ND ELECTRIC	-	-	-	M
M	-	-	-	2ND ELECTRIC	20/1	11	| | C	12	20/1	2ND ELECTRIC	-	-	-	M
M	-	-	-	3RD ELECTRIC	20/1	13	A | |	14	20/1	3RD ELECTRIC	-	-	-	M
M	-	-	-	3RD ELECTRIC	20/1	15	| B |	16	20/1	3RD ELECTRIC	-	-	-	M
M	-	-	-	STAGE RIGHT	20/1	17	| | C	18	20/1	STAGE RIGHT	-	-	-	M
M	-	-	-	STAGE LEFT	20/1	19	A | |	20	20/1	STAGE LEFT	-	-	-	M
M	-	-	-	SPARE	20/1	21	| B |	22	20/1	SPARE	-	-	-	M
M	-	-	-	SPARE	20/1	23	| | C	24	20/1	SPARE	-	-	-	M
	0	0	0								0	0	0	

PHASE A	0	kVA
PHASE B	0	kVA
PHASE C	0	kVA
TOTAL	**0**	**kVA**

M=MOTORIZED BREAKER
Z=ZONE CONTROL
S=SEQUENCED
D=DMX CONTROL
I=ISOLATED GROUND CIRCUIT

(Figure 4.5.7.0.1: Panel Schedule Sample)

4.6 Lighting Control System Documentation Combined with Lighting Design Documents

In smaller or less complex lighting control systems it may be possible to add lighting control system documentation to the light plot, lighting section, instrument schedule and channel hookup. Follow the recommendations in Section 4.5 along with these recommendations when taking that approach.

4.6.1 Adding Lighting Control System Information to a Light Plot and Section

- Include lighting control network equipment (e.g., network receptacles, DMX gateways, splitters, switches) on the light plot if it is located on or adjacent to lighting positions and provides control signals to lighting instruments.
- If equipment is near a lighting position but not mounted on the pipe, show it on the light plot with a device ID and a note on its mounting location (e.g., "Wall Mounted", "In Raceway", "Above Electric", or similar.) (See Figure 4.6.1.0.1)
- Use a "fly-off" symbol with device ID and location to indicate remotely located network devices providing control signals to lighting instruments.
- Network infrastructure devices mounted on lighting pipes should be identified by device ID. They don't need instrument numbers and should not be listed on the instrument schedule.
- Lighting control system documents may be included on the same drawing sheet as the light plot if there is room.
- Include network infrastructure devices on lighting section drawings if it aids in equipment location or coordination.

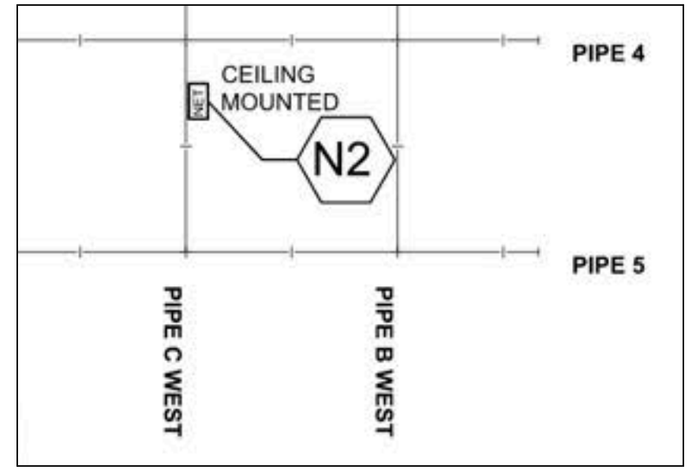

(Figure 4.6.1.0.1: Notation of different non-pipe mounted device)

4.6.2 Adding Lighting Control System Information to an Instrument Schedule and Channel Hookup

A limited amount of lighting instrument specific network information (e.g. automated lighting instrument operation mode, DMX slot footprint) may be included on instrument schedule and channel hookup documents by adding it to the fixture name or including an extra column in the schedules.

4.7 Detail Drawings

Detail drawings provide close up views, typically drawn in scale, of lighting devices that can be used to specify or build custom assemblies or show special installation conditions. They should be included with lighting documentation when needed.

4.7.1 Rack Elevation Detail Drawings

Include a Rack Elevation Detail Drawing with lighting documentation when specifying a new network equipment rack or when making changes to an existing rack (See Figure 4.7.1.0.1)

- Show the rack with installed equipment and rack unit (RU) numbering that matches the actual rack. When the actual rack does not include RU numbers start with 1 at the top.
- Represent network equipment with rectangles that match the RU size of the actual device, or with an elevation view of the device.
- Place labels inside the device rectangle or aligned with the device on one side of the rack.
- Always include the device ID. The device type, device name, make and model, or other information fields may also be included.
- Include the rack name, number, and the room name and number. Number multiple racks in a room from left to right when facing the front.

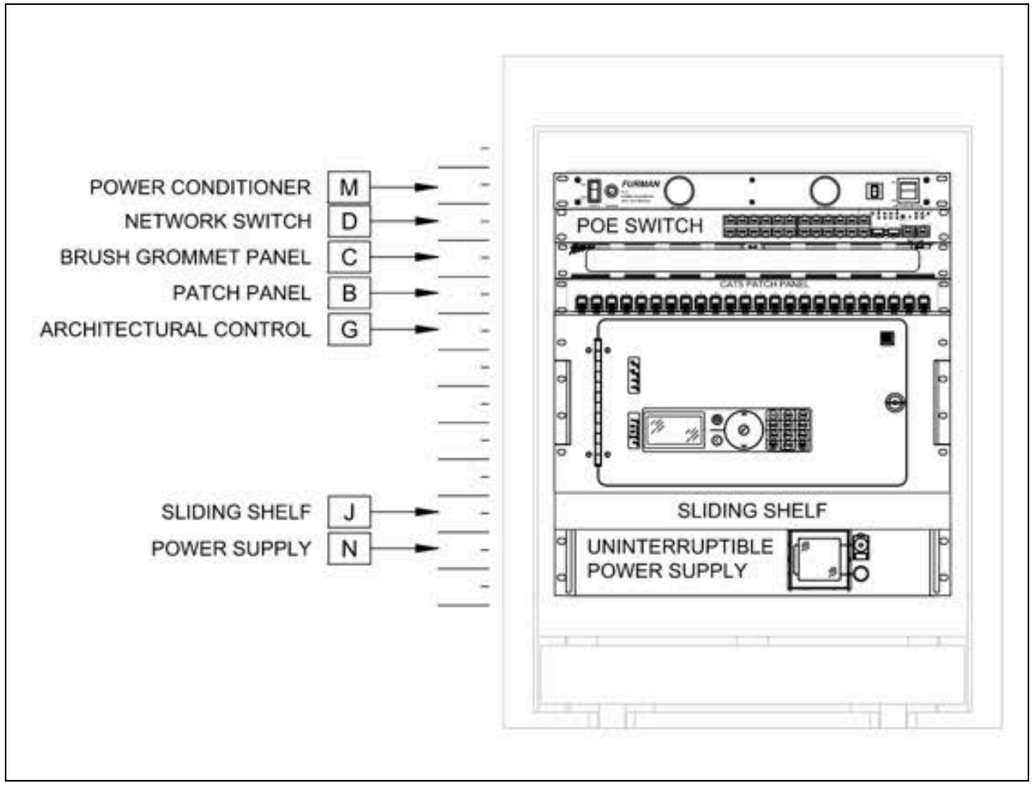

(Figure 4.7.1.0.1: Rack elevation drawings with unit labels)
Graphic provided courtesy of Barbizon Lighting Company

4.7.2 DIN Enclosure Drawings

A DIN enclosure is another way to mount some lighting control devices. When a DIN enclosure is used in a lighting control system, a detail drawing showing the enclosure and equipment installed in it should be included with lighting documentation.

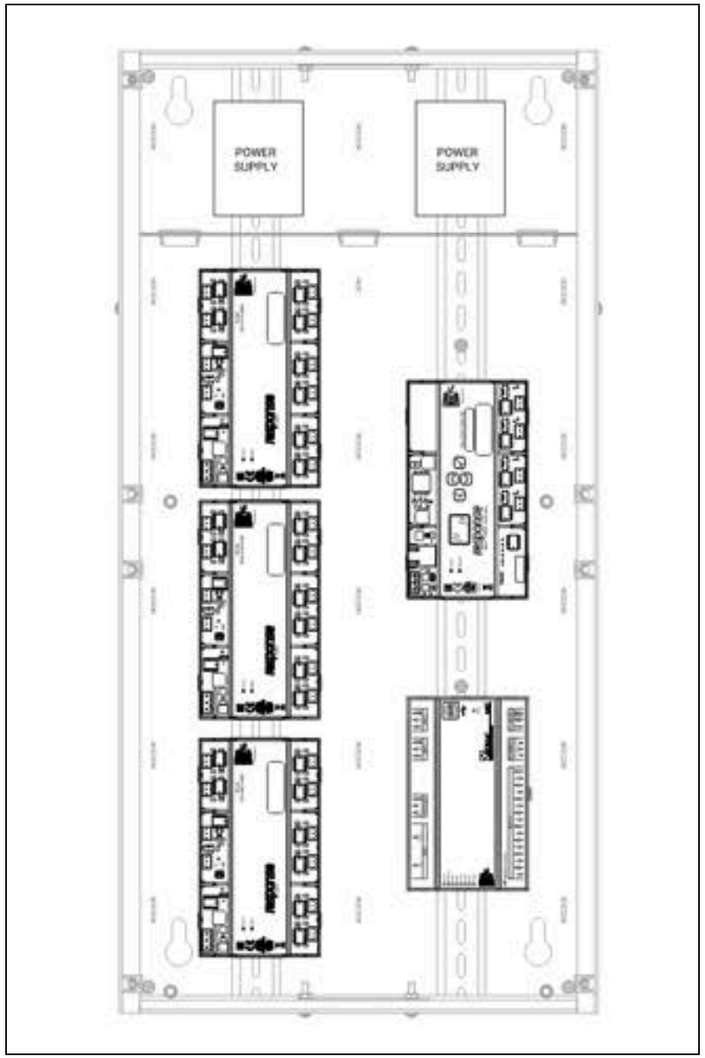

(Figure 4.7.2.0.1: DIN elevation drawings with unit labels)
Graphic provided courtesy of Barbizon Lighting Company and ETC

4.7.3 Device Details Drawings

Providing a detail view of the physical attributes or the mounting position for certain devices may enhance communication regarding their implementation and functionality. (See Figure 4.7.3.0.1)

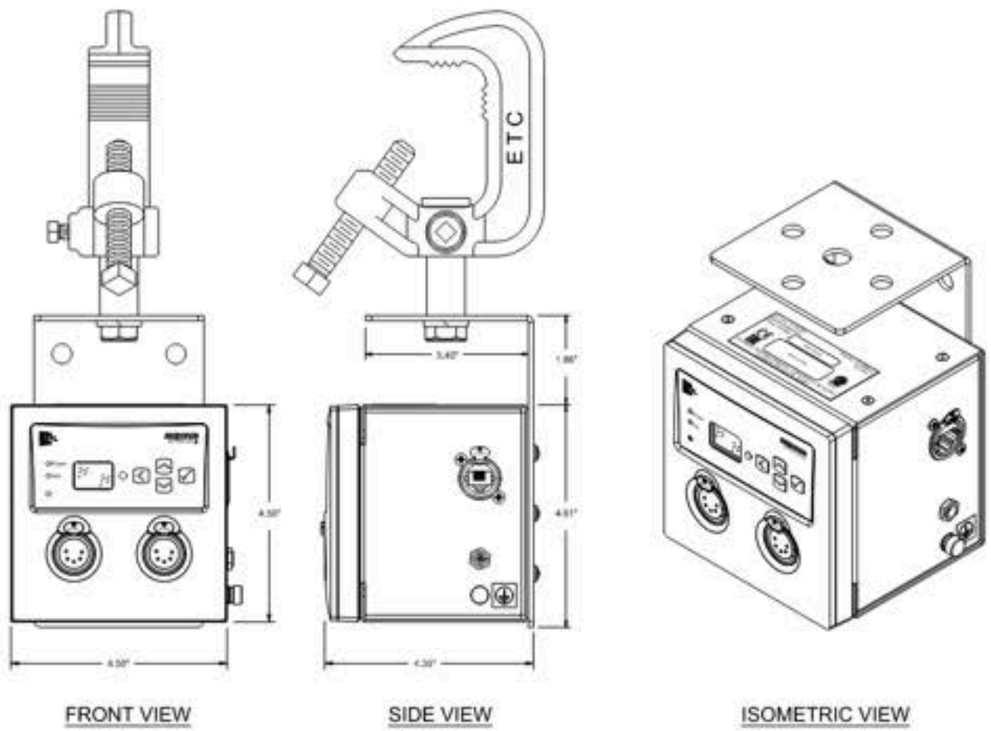

(Figure 4.7.3.0.1: Device detail to show mounting method and dimensions for a device)
Graphic provided courtesy of ETC

4.8 Device Configuration Files

Some lighting network devices may store settings and information about connected devices in configuration files. These files are manufacturer-specific and come in different formats. It is an important part of network documentation to keep copies of all relevant configurations. These copies may be stored and included with network documentation in whatever way is most effective for each device's configuration file format. Creating a list or table of each network device and the current configuration file may make keeping track of current configuration files easier.

APPENDIX: Full Lighting Documentation Package

The following is a sample of a full lighting system documentation package. Drafting styles may vary due to contributions from multiple drafters. These variations align with the RP's intent to serve as flexible guidelines, allowing for graphics and documentation tailored to the specific needs of each production, venue, or company.

Acknowledgement

The principal authors of this document, Michael Kraczek and Gregg Hillmar, and editors, Tori Mays, Mandy Heath, and Jonathan Allender-Zivic, would like to thank everyone for their contributions in creating the USITT-LDRP. Specifically: Jonathan Allender-Zivic, Matt Ardine, Ken Billington, Heather Brown, Richard Cadena, Autum Casey, Adam Chamberlin, Kolby Clarke, Chris Conti, Michael Dodge, Wally Eastland, Mandy Heath, Gregg Hillmar, Philip Johnson, Michael Kraczek, Tori Mays, John McKernon, Lowell Olcott, Nate Parde, Tony Penna, Jason Potterf, Todd Proffitt, Brian Saydak, Nicolai Gubi Schmidt, Kirk Starks, Steve Shelley, Jakyung Seo, David Smith, Jay Weddle, Joshua Williamson, and BJ Wilkinson.

Additional graphics provided by: Barbizon Lighting Company & Electronic Theatre Controls, Inc.

SAMPLE SHOW PROJECT

REVISION HISTORY		
LABEL	DATE	DESCRIPTION
A	2024-11-14	PRELIMINARY

DRAWING INDEX		
PLATE NO.	REV	DESCRIPTION
TL-01	A	LIGHT PLOT - OVERSTAGE
TL-02	A	LIGHT PLOT - BOOMS & FLOOR
TL-03	A	LIGHTING DEVICE PLAN - FLOOR
TL-04	A	LIGHTING DEVICE PLAN - CEILING
TL-05	A	LIGHTING SECTION
TL-06	A	SYSTEM DIAGRAM
TL-07	A	SYSTEM SCHEDULES
TL-08	A	INTRACONNECT
TL-09	A	RACK ELEVATION & IP SCHEDULE
TL-10	A	SET ELECTRICS & LED TAPE DETAIL
TL-11	A	FOCUS POINT LAYOUT
TL-12	A	INSTRUMENT SCHEDULE
TL-13	A	CHANNEL HOOKUP
TL-14	A	COLOR & DMX ADDRESS SCHEDULE
TL-15	A	DIMMER PANEL SCHEDULE
TL-16	A	SHOP ORDER

LIGHTING DOCUMENTATION RECOMMENDED PRACTICE

SYRACUSE, NY

USITT

USITT LIGHTING COMMISSION

THIS DRAWING IS MEANT ONLY TO CONVEY VISUAL, CONCEPTUAL AND DESIGN IDEAS. THE LIGHTING DESIGNER WILL NOT ASSUME RESPONSIBILITY FOR IMPROPER ENGINEERING, CONSTRUCTION, HANDLING, INSTALLATION, WIRING, POWER CONSIDERATIONS OR USE OF THE LIGHTING EQUIPMENT.

DRAFTED BY: TM

NTS		PLATE 1 OF 17
2024-11-14	A	

COVER PAGE

TL-00

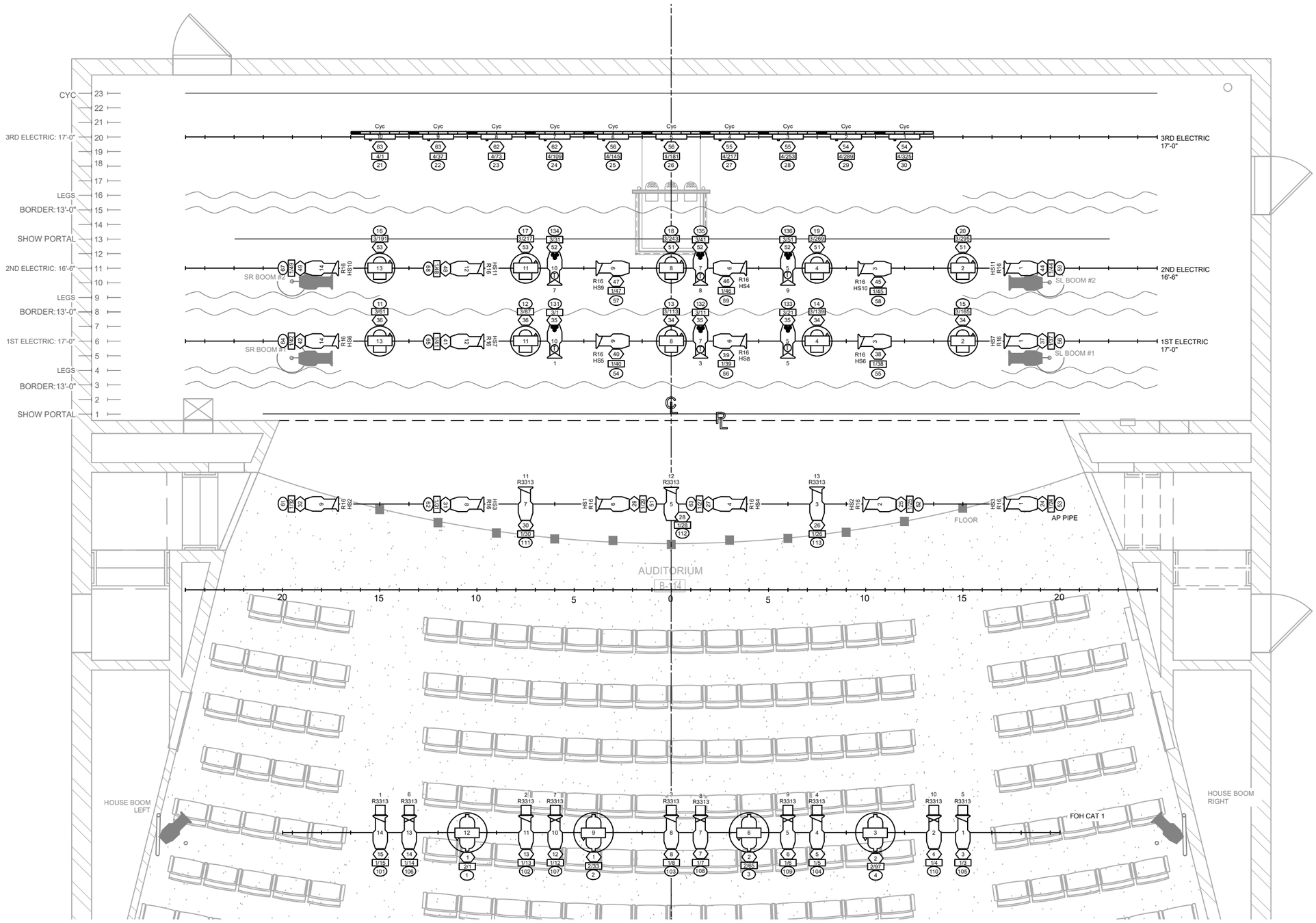

LIGHTING DOCUMENTATION RECOMMENDED PRACTICE

SYRACUSE, NY

USITT

USITT LIGHTING COMMISSION

LIGHTING FIXTURE KEY

- WASH MOVER (26-CHANNEL) *TRIANGLE INDICATES CONNECTOR*
- PROFILE MOVER (32-CHANNEL) *TRIANGLE INDICATES CONNECTOR*
- SIXBAR (6-CELL) *OVAL INDICATES STARTING PIXEL*
- CONVENTIONAL ERS 19-DEGREE
- CONVENTIONAL ERS 26-DEGREE
- CONVENTIONAL ERS 36-DEGREE
- LED ERS 26-DEGREE (10-CHANNEL)
- LED ERS 50-DEGREE (10-CHANNEL)
- RGBA CUBE
- GOBO / TEMPLATE
- TOP HAT

LIGHTING FIXTURE LABEL LEGEND

- 7 — FOCUS
- R3313 — COLOR
- ACCESSORY
- GOBO / TEMPLATE
- 10 — UNIT NUMBER
- 52 — CIRCUIT
- 1/12 — ADDRESS
- 107 — CHANNEL

THIS DRAWING IS MEANT ONLY TO CONVEY VISUAL, CONCEPTUAL AND DESIGN IDEAS. THE LIGHTING DESIGNER WILL NOT ASSUME RESPONSIBILITY FOR IMPROPER ENGINEERING, CONSTRUCTION, HANDLING, INSTALLATION, WIRING, POWER CONSIDERATIONS OR USE OF THE LIGHTING EQUIPMENT.

DRAFTED BY: MH

3/16" = 1'-0"

2024-11-14 | A

PLATE **2** OF 17

LIGHT PLOT

TL-01

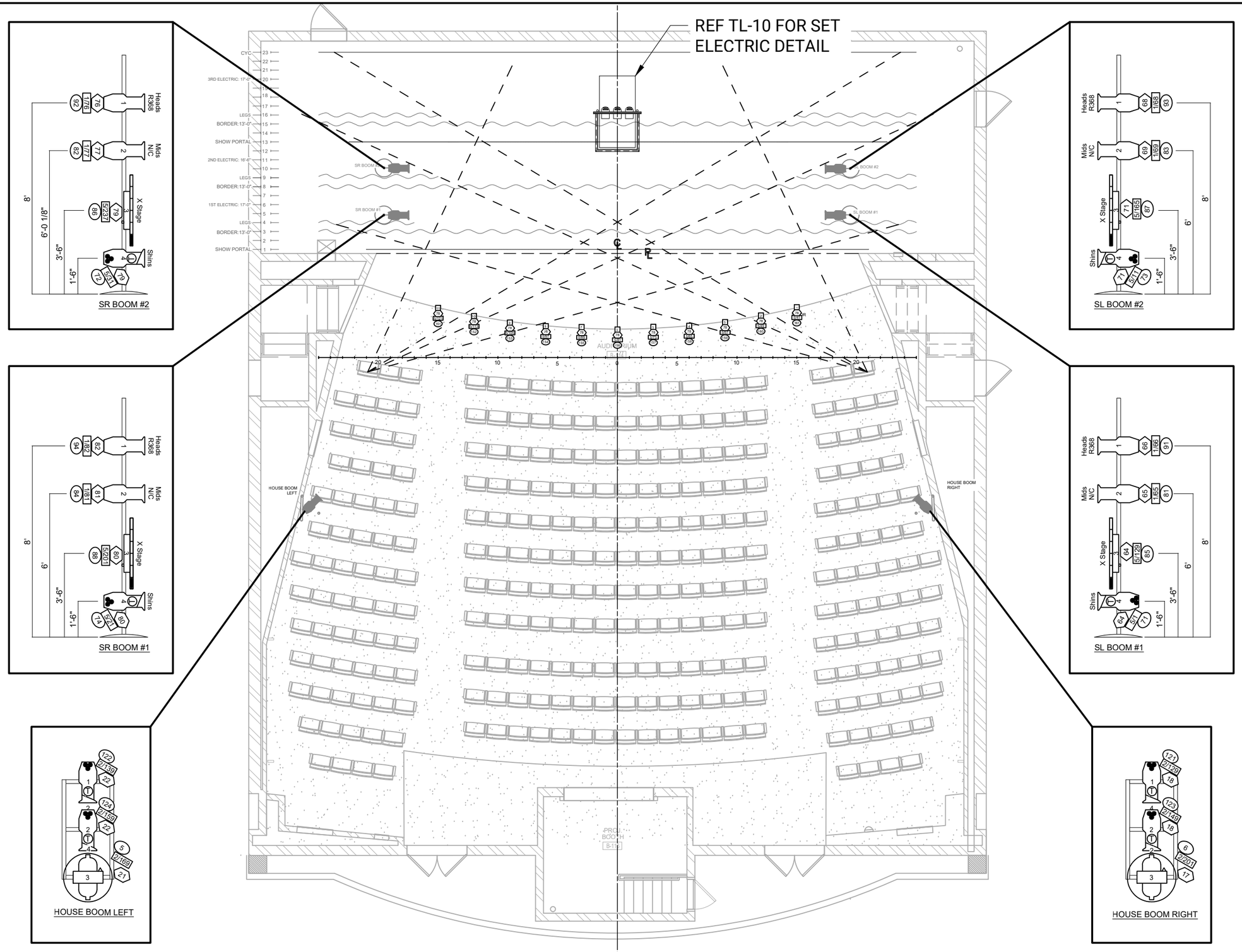

LIGHTING DOCUMENTATION RECOMMENDED PRACTICE

SYRACUSE, NY

USITT

USITT LIGHTING COMMISSION

LIGHTING FIXTURE KEY

- WASH MOVER (26-CHANNEL) *TRIANGLE INDICATES CONNECTOR*
- PROFILE MOVER (32-CHANNEL) *TRIANGLE INDICATES CONNECTOR*
- SIXBAR (6-CELL) *OVAL INDICATES STARTING PIXEL*
- CONVENTIONAL ERS 19-DEGREE
- CONVENTIONAL ERS 26-DEGREE
- CONVENTIONAL ERS 36-DEGREE
- LED ERS 26-DEGREE (10-CHANNEL)
- LED ERS 50-DEGREE (10-CHANNEL)
- RGBA CUBE
- GOBO / TEMPLATE
- TOP HAT

LIGHTING FIXTURE LABEL LEGEND

- 7 — FOCUS
- R3313 — COLOR
- ACCESSORY
- GOBO / TEMPLATE
- 10 — UNIT NUMBER
- 52 — CIRCUIT
- 1/12 — ADDRESS
- 107 — CHANNEL

THIS DRAWING IS MEANT ONLY TO CONVEY VISUAL, CONCEPTUAL AND DESIGN IDEAS. THE LIGHTING DESIGNER WILL NOT ASSUME RESPONSIBILITY FOR IMPROPER ENGINEERING, CONSTRUCTION, HANDLING, INSTALLATION, WIRING, POWER CONSIDERATIONS OR USE OF THE LIGHTING EQUIPMENT.

DRAFTED BY: MH

1/8" = 1'-0"

2024-11-14 | A

PLATE **3** OF 17

LIGHT PLOT
GROUND LEVEL

TL-02

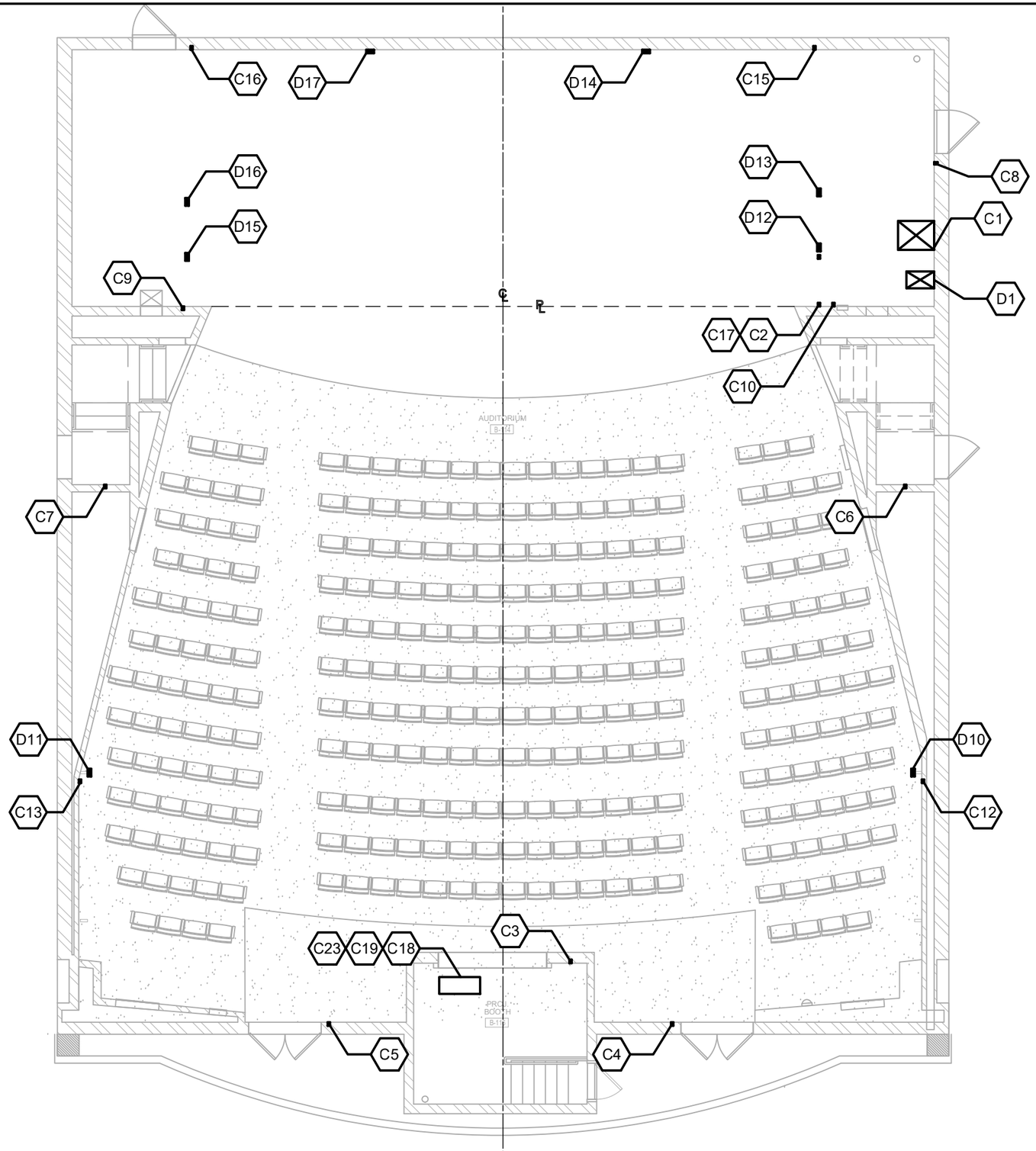

LIGHTING DOCUMENTATION RECOMMENDED PRACTICE

SYRACUSE, NY

USITT

USITT LIGHTING COMMISSION

DEVICE SYMBOL KEY

DEVICE ID

C6

PLEASE REFER TO DEVICE SCHEDULE FOR DEVICE NAME LABELING ON TL-07

THIS DRAWING IS MEANT ONLY TO CONVEY VISUAL, CONCEPTUAL AND DESIGN IDEAS. THE LIGHTING DESIGNER WILL NOT ASSUME RESPONSIBILITY FOR IMPROPER ENGINEERING, CONSTRUCTION, HANDLING, INSTALLATION, WIRING, POWER CONSIDERATIONS OR USE OF THE LIGHTING EQUIPMENT.

DRAFTED BY: TM

1/8" = 1'-0"

2024-11-14 | A

PLATE **4** OF 17

LIGHTING DEVICE FLOOR PLAN

TL-03

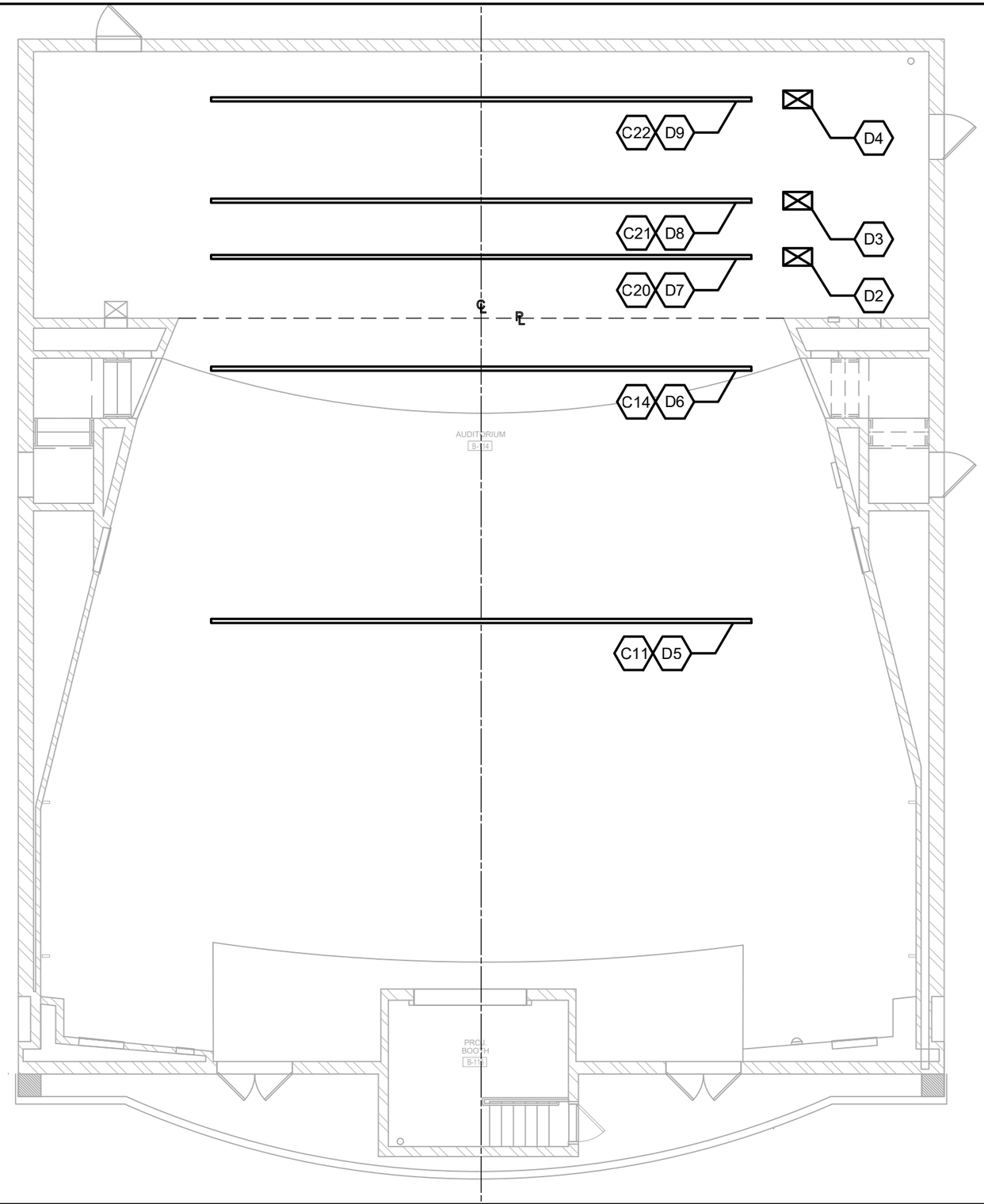

LIGHTING DOCUMENTATION RECOMMENDED PRACTICE

SYRACUSE, NY

USITT

USITT LIGHTING COMMISSION

DEVICE SYMBOL KEY

DEVICE ID

C6

PLEASE REFER TO DEVICE SCHEDULE FOR DEVICE NAME LABELING ON TL-07

THIS DRAWING IS MEANT ONLY TO CONVEY VISUAL, CONCEPTUAL AND DESIGN IDEAS. THE LIGHTING DESIGNER WILL NOT ASSUME RESPONSIBILITY FOR IMPROPER ENGINEERING, CONSTRUCTION, HANDLING, INSTALLATION, WIRING, POWER CONSIDERATIONS OR USE OF THE LIGHTING EQUIPMENT.

DRAFTED BY: TM

1/8" = 1'-0"		PLATE **5** OF 17
2024-11-14	A	

LIGHTING DEVICE CEILING PLAN

TL-04

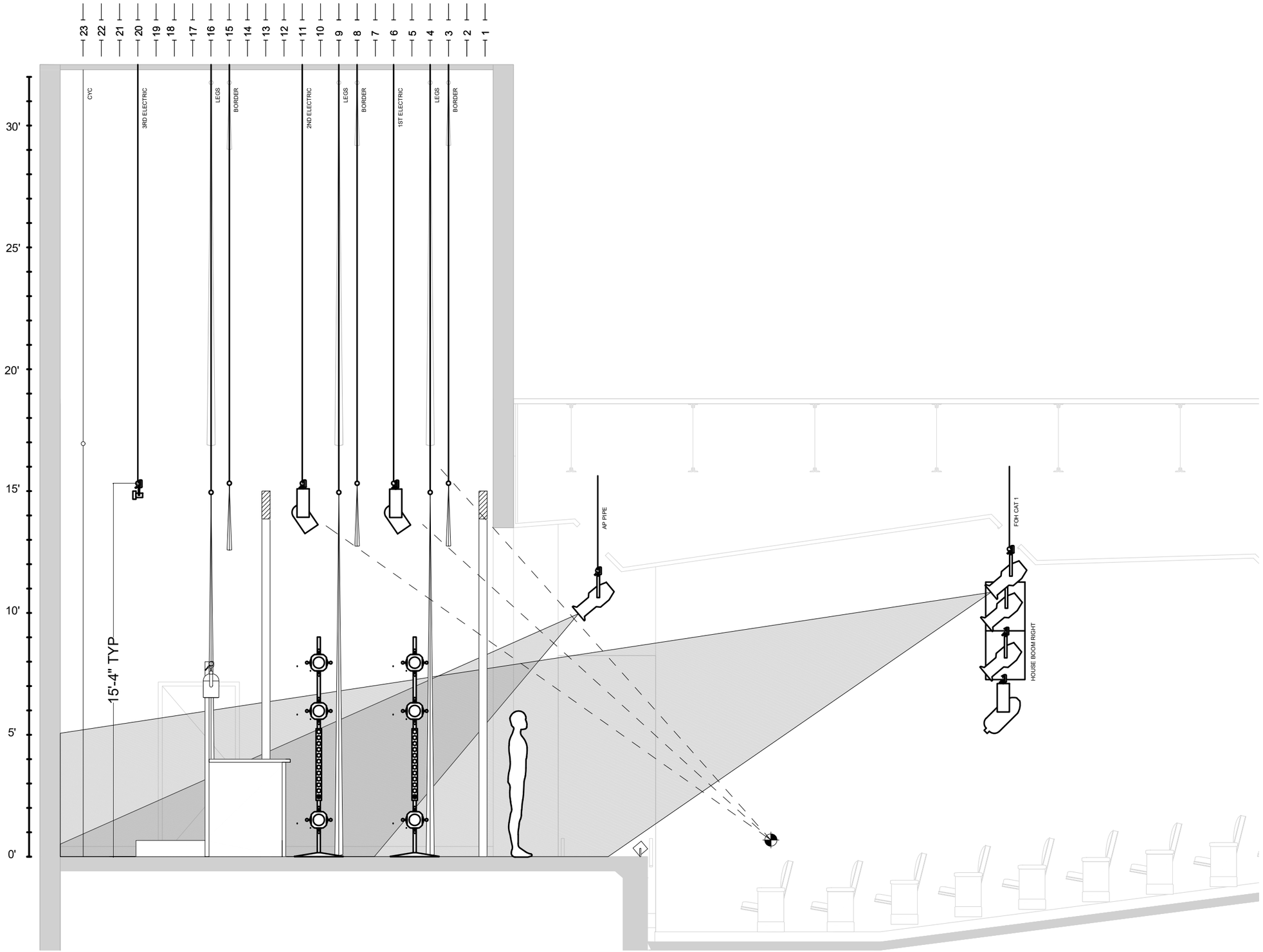

LIGHTING DOCUMENTATION RECOMMENDED PRACTICE

SYRACUSE, NY

USITT

USITT LIGHTING COMMISSION

THIS DRAWING IS MEANT ONLY TO CONVEY VISUAL, CONCEPTUAL AND DESIGN IDEAS. THE LIGHTING DESIGNER WILL NOT ASSUME RESPONSIBILITY FOR IMPROPER ENGINEERING, CONSTRUCTION, HANDLING, INSTALLATION, WIRING, POWER CONSIDERATIONS OR USE OF THE LIGHTING EQUIPMENT.

DRAFTED BY:	JAZ

3/16" = 1'-0"		PLATE **6** OF 17
2024-11-14	A	

LIGHTING SECTION

TL-05

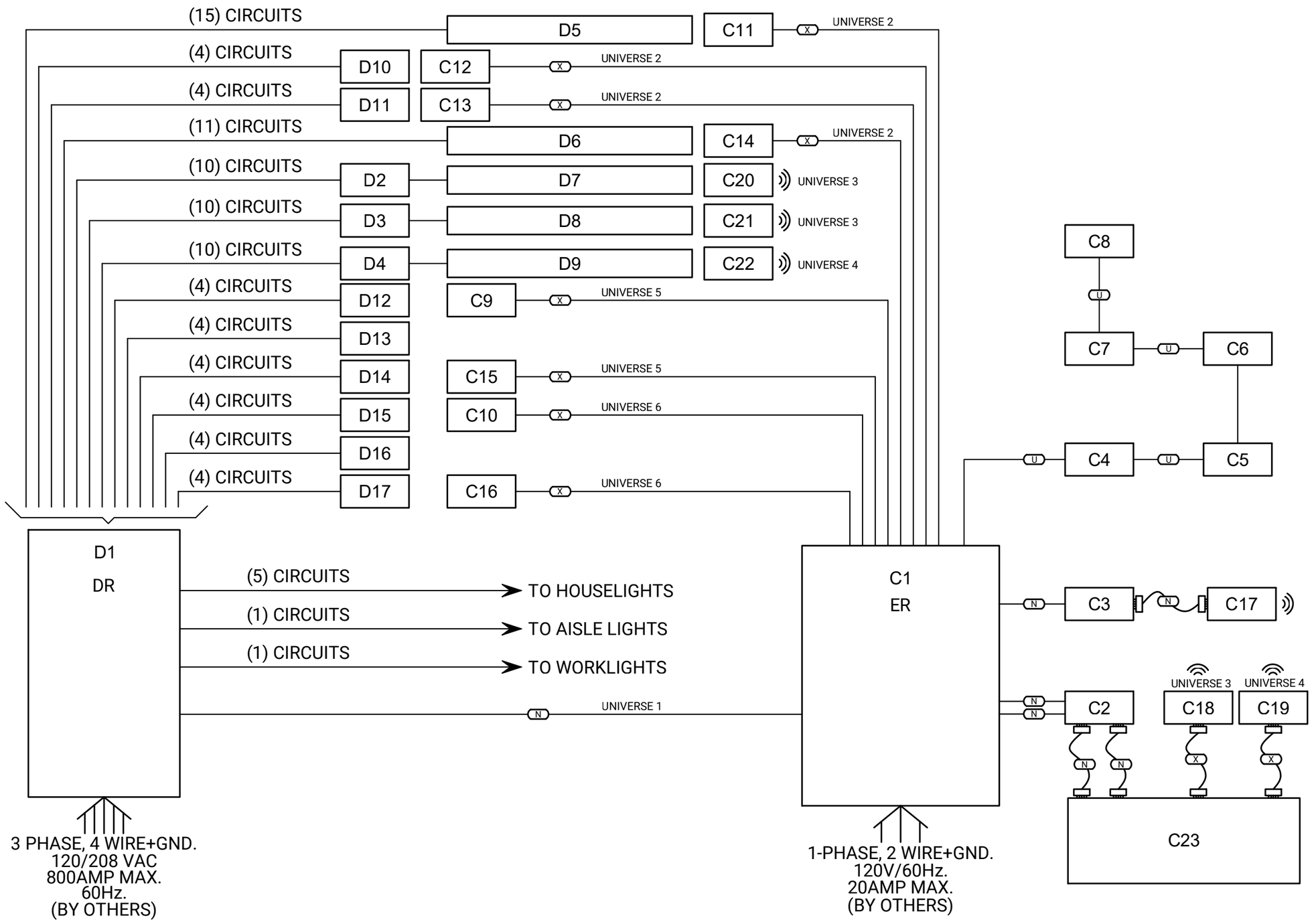

LIGHTING DOCUMENTATION RECOMMENDED PRACTICE

SYRACUSE, NY

USITT

USITT LIGHTING COMMISSION

WIRE KEY

X DMX OUT	2-PAIR TWISTED CABLE. 120 OHM (HOME-RUNS. NO WIRE SPLICES. MAX 1000FT.)
U UNISON	SERIAL CABLE. (TOPOLOGY FREE. MAX 1640FT.)
N NET	CAT5E CABLE. (HOME RUN. NO WIRE SPLICES. MAX 300FT.)

GENERAL NOTES

***REFERENCE DEVICE SCHEDULE ON TL-07 AND INTRACONNECT ON TL-08 ***

THIS DRAWING IS MEANT ONLY TO CONVEY VISUAL, CONCEPTUAL AND DESIGN IDEAS. THE LIGHTING DESIGNER WILL NOT ASSUME RESPONSIBILITY FOR IMPROPER ENGINEERING, CONSTRUCTION, HANDLING, INSTALLATION, WIRING, POWER CONSIDERATIONS OR USE OF THE LIGHTING EQUIPMENT.

DRAFTED BY: TM.

NTS		PLATE
2024-11-14	A	7 OF 17

LIGHTING SYSTEM DIAGRAM

TL-06

LIGHTING CONTROL DEVICE SCHEDULE

DEVICE ID	DEVICE TYPE	DESCRIPTION	LOCATION	MOUNTING
C1	ER	EQUIPMENT RACK	STAGE LEFT	SURFACE
C2	NET2	2-PORT NET RECEPTACLES	STAGE LEFT	RECESSED
C3	NET1	1-PORT NET RECEPTACLES	BOOTH	RECESSED
C4	BS4	4-BUTTON CONTROL STATION	BACK OF HOUSE RIGHT	RECESSED
C5	BS4	4-BUTTON CONTROL STATION	BACK OF HOUSE LEFT	RECESSED
C6	BS4	4-BUTTON CONTROL STATION	HOUSE RIGHT	RECESSED
C7	BS4	4-BUTTON CONTROL STATION	HOUSE LEFT	RECESSED
C8	BS4	4-BUTTON CONTROL STATION	STAGE RIGHT	RECESSED
C9	DMX1	1-PORT DMX OUT RECEPTACTLE	STAGE LEFT	RECESSED
C10	DMX1	1-PORT DMX OUT RECEPTACTLE	STAGE RIGHT	RECESSED
C11	DMX1	1-PORT DMX OUT RECEPTACTLE	FOH	SURFACE
C12	DMX1	1-PORT DMX OUT RECEPTACTLE	HR	RECESSED
C13	DMX1	1-PORT DMX OUT RECEPTACTLE	HL	RECESSED
C14	DMX1	1-PORT DMX OUT RECEPTACTLE	AP	RECESSED
C15	DMX1	1-PORT DMX OUT RECEPTACTLE	USL	SURFACE
C16	DMX1	1-PORT DMX OUT RECEPTACTLE	USR	RECESSED
C17	WAP	WIRELESS ACCESS POINT (LIGHTING NETWORK)	STAGE LEFT	SURFACE
C18	WTDMX	DMX WIRELESS TRANSMITTER	BOOTH	PORTABLE
C19	WTDMX	DMX WIRELESS TRANSMITTER	BOOTH	PORTABLE
C20	WRDMX	DMX WIRELESS RECEIVER	1E	PIPE
C21	WRDMX	DMX WIRELESS RECEIVER	2E	PIPE
C22	WRDMX	DMX WIRELESS RECEIVER	3E	PIPE
C23	CON	LIGHTING CONTROL CONSOLE	BOOTH	PORTABLE
C24	GWAY4	4-PORT DMX GATEWAY	C1 / ER	RACK
C25	GWAY4	4-PORT DMX GATEWAY	C1 / ER	RACK
C26	OPTO8	8-PORT DMX SPLITTER	C1 / ER	RACK
C27	SW8	8-PORT POE NETWORK SWITCH	C1 / ER	RACK
C28	PATCH8	8-PORT PATCH PANEL	C1 / ER	RACK
C29	ARCH	ARCHITECTURAL LIGHTING CONTROL UNIT	C1 / ER	RACK
C30	MEDIA	MEDIA SERVER	C1 / ER	RACK

LIGHTING POWER DEVICE SCHEDULE

DEVICE ID	DEVICE TYPE	DESCRIPTION	LOCATION	MOUNTING
D1	DR	DIMMER RACK	STAGE LEFT	SURFACE
D2	JB	JUNCTION BOX	1E	SURFACE
D3	JB	JUNCTION BOX	2E	SURFACE
D4	JB	JUNCTION BOX	3E	SURFACE
D5	CS15	CONNECTOR STRIP 15-CIRCUIT	FOH	PIPE
D6	CS11	CONNECTOR STRIP 11-CIRCUIT	AP	PIPE
D7	CS10	CONNECTOR STRIP 10-CIRCUIT	1E	PIPE
D8	CS10	CONNECTOR STRIP 10-CIRCUIT	2E	PIPE
D9	CS10	CONNECTOR STRIP 10-CIRCUIT	3E	PIPE
D10	OB4R	OUTLET BOX 4-CIRCUIT	HR	RECESSED
D11	OB4R	OUTLET BOX 4-CIRCUIT	HL	RECESSED
D12	OB4F	OUTLET BOX 4-CIRCUIT	DSL	FLOOR
D13	OB4F	OUTLET BOX 4-CIRCUIT	MSL	FLOOR
D14	OB4S	OUTLET BOX 4-CIRCUIT	USL	SURFACE
D15	OB4F	OUTLET BOX 4-CIRCUIT	DSR	FLOOR
D16	OB4F	OUTLET BOX 4-CIRCUIT	MSR	FLOOR
D17	OB4S	OUTLET BOX 4-CIRCUIT	USR	SURFACE

LIGHTING DOCUMENTATION RECOMMENDED PRACTICE

SYRACUSE, NY

USITT

USITT LIGHTING COMMISSION

THIS DRAWING IS MEANT ONLY TO CONVEY VISUAL, CONCEPTUAL AND DESIGN IDEAS. THE LIGHTING DESIGNER WILL NOT ASSUME RESPONSIBILITY FOR IMPROPER ENGINEERING, CONSTRUCTION, HANDLING, INSTALLATION, WIRING, POWER CONSIDERATIONS OR USE OF THE LIGHTING EQUIPMENT.

DRAFTED BY: MK

1/8" = 1'-0"

2024-11-14 | A

PLATE **8** OF 17

SCHEDULES

TL-07

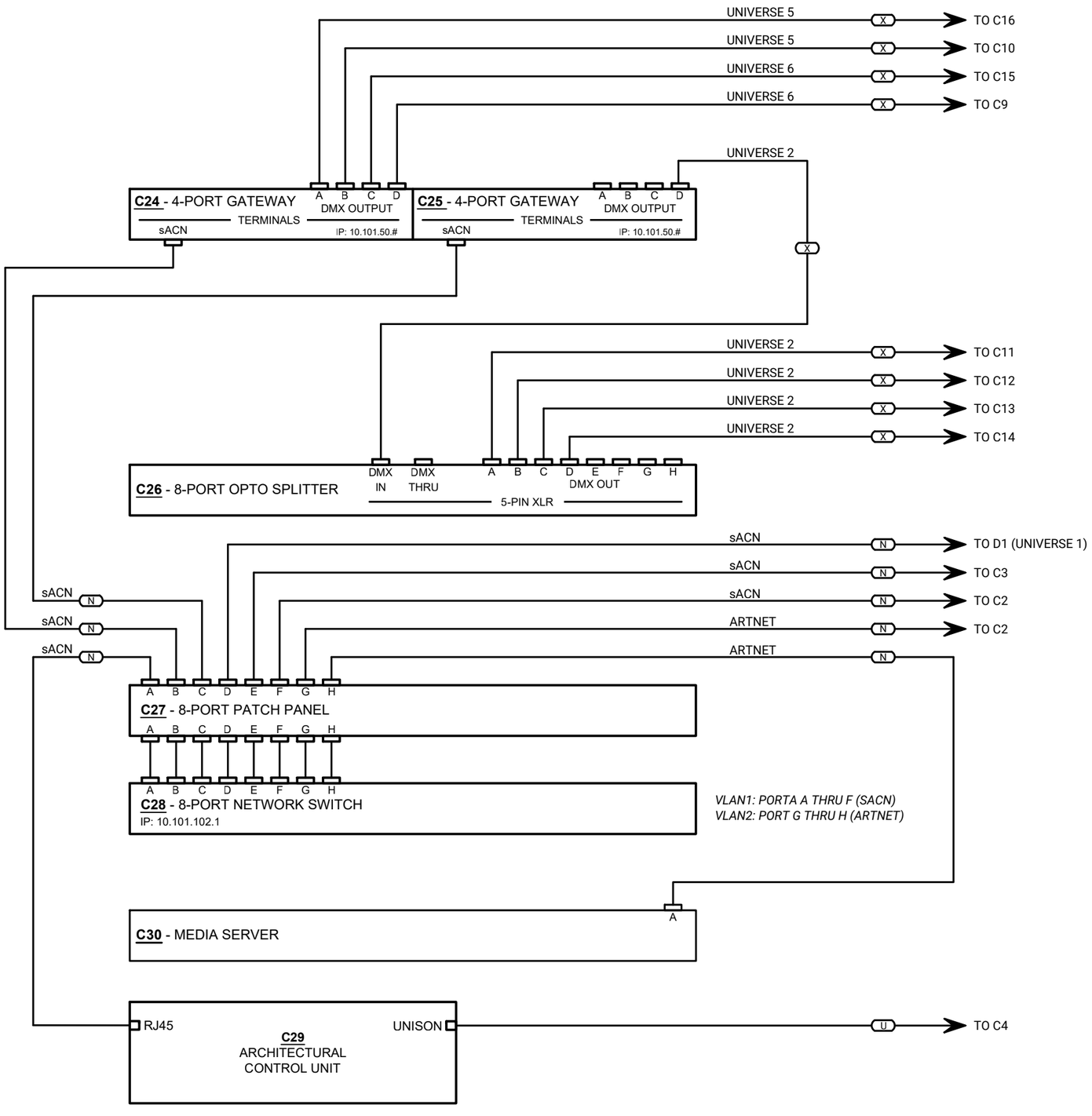

LIGHTING DOCUMENTATION RECOMMENDED PRACTICE

SYRACUSE, NY

USITT

USITT LIGHTING COMMISSION

WIRE KEY

X	2-PAIR TWISTED CABLE. 120 OHM (HOME-RUNS. NO WIRE SPLICES. MAX 1000FT.)	DMX OUT
U	SERIAL CABLE (TOPOLOGY FREE. MAX 1640FT.)	UNISON
N	CAT5E CABLE (HOME RUN. NO WIRE SPLICES. MAX 300FT.)	NET

THIS DRAWING IS MEANT ONLY TO CONVEY VISUAL, CONCEPTUAL AND DESIGN IDEAS. THE LIGHTING DESIGNER WILL NOT ASSUME RESPONSIBILITY FOR IMPROPER ENGINEERING, CONSTRUCTION, HANDLING, INSTALLATION, WIRING, POWER CONSIDERATIONS OR USE OF THE LIGHTING EQUIPMENT.

DRAFTED BY: TM

NTS		PLATE 9 OF 17
2024-11-14	A	

INTRACONNECT

TL-08

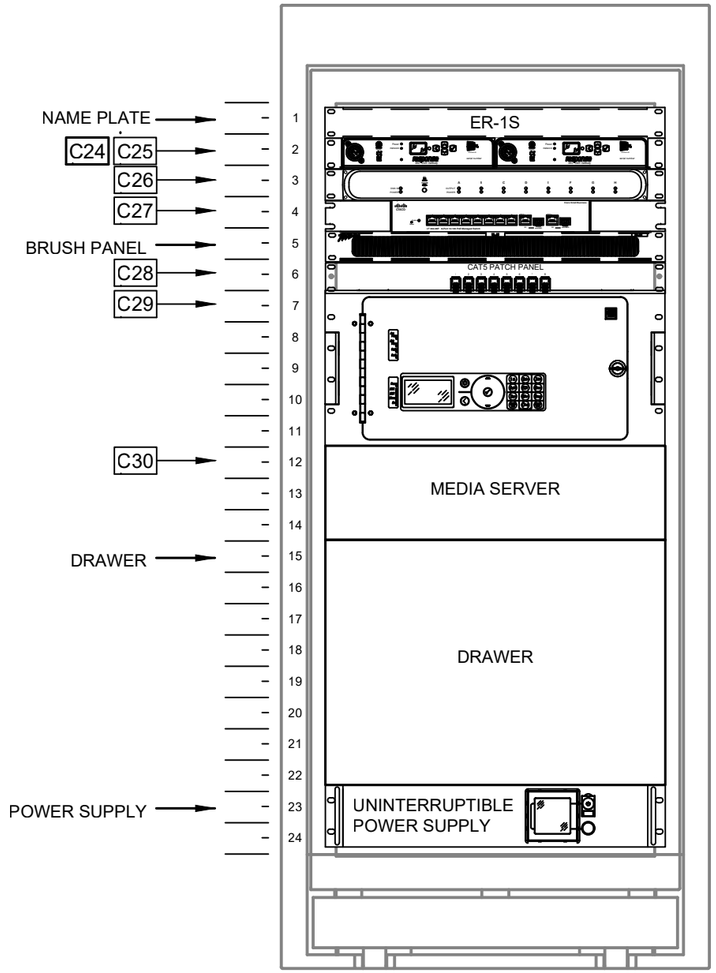

IP ADDRESS SCHEDULE

Device ID	Device Type	Description	PORT	IP ADDRESS	SUBNET MASK	ASSIGNER
C17	WAP	WIRELESS ACCESS POINT (LIGHTING NETWORK)	1	10.101.0.121	255.255.0.0	STATIC
C23	MAIN	LIGHTING CONTROL CONSOLE	1	10.101.100.30	255.255.0.0	STATIC
C23	MAIN	LIGHTING CONTROL CONSOLE	2	192.168.0.1	255.255.0.0	STATIC
C30	MEDIA	MEDIA SERVER		192.168.0.21	255.255.0.0	STATIC
C24	GWAY4	4-PORT DMX GATEWAY	1	10.101.50.###	255.255.0.0	DHCP
C25	GWAY4	4-PORT DMX GATEWAY	1	10.101.50.###	255.255.0.0	DHCP
C27	SW8	8-PORT POE NETWORK SWITCH	N/A	10.101.102.1	255.255.0.0	STATIC
C29	ARCH	ARCHITECTURAL LIGHTING CONTROL UNIT	1	10.101.10.101	255.255.0.0	STATIC
D1	DR	DIMMER RACK	1	10.101.101.101	255.255.0.0	STATIC

ENABLE MAIN LIGHTING CONSOLE ONLY AS DHCP SERVER

LIGHTING DOCUMENTATION RECOMMENDED PRACTICE

SYRACUSE, NY

USITT

USITT LIGHTING COMMISSION

THIS DRAWING IS MEANT ONLY TO CONVEY VISUAL, CONCEPTUAL AND DESIGN IDEAS. THE LIGHTING DESIGNER WILL NOT ASSUME RESPONSIBILITY FOR IMPROPER ENGINEERING, CONSTRUCTION, HANDLING, INSTALLATION, WIRING, POWER CONSIDERATIONS OR USE OF THE LIGHTING EQUIPMENT.

DRAFTED BY: TM

NTS

2024-11-14 A

PLATE **10** OF 17

RACK ELEVATION & IP ADDRESS SCHED

TL-09

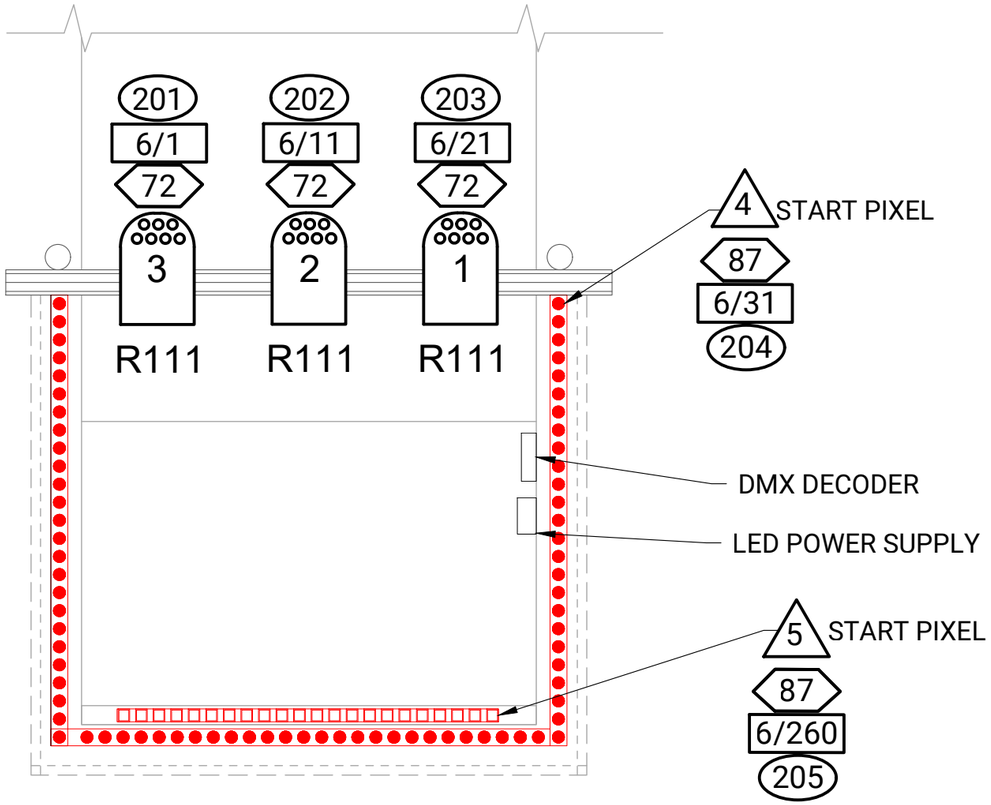

PLOT TOP VIEW

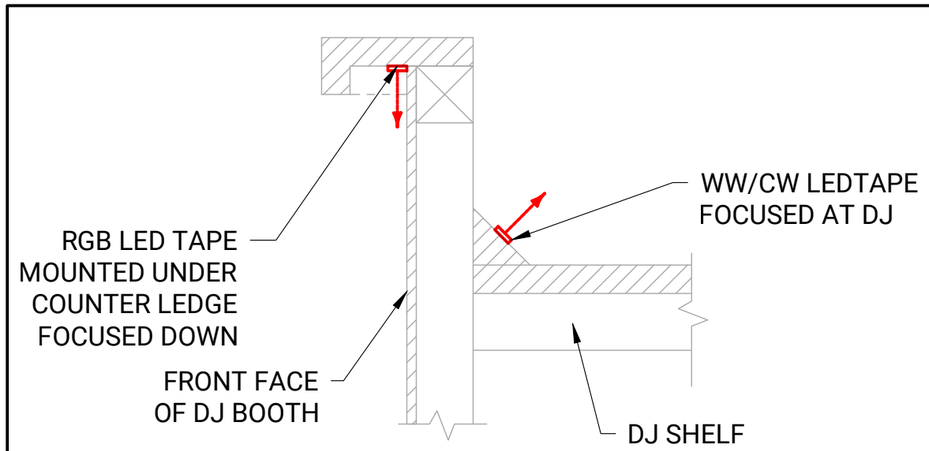

LED TAPE MOUNTING DETAIL

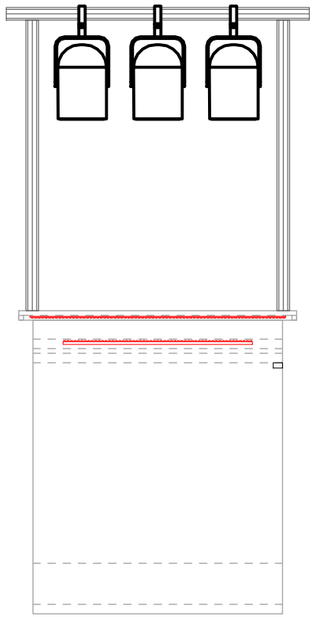

FRONT VIEW

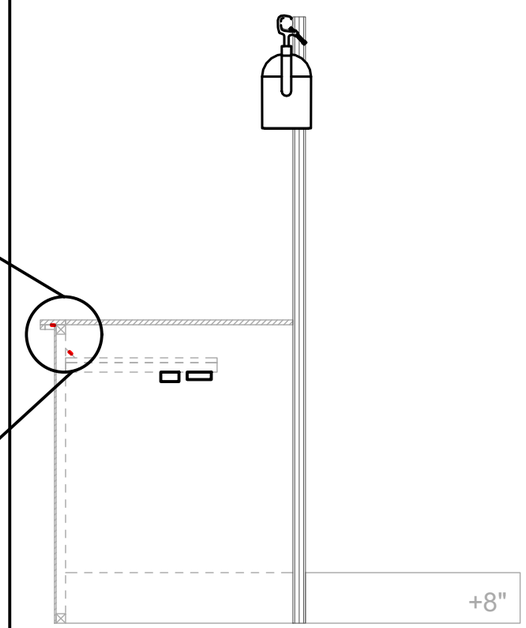

SIDE VIEW

LIGHTING DOCUMENTATION RECOMMENDED PRACTICE

SYRACUSE, NY

USITT

USITT LIGHTING COMMISSION

LIGHTING FIXTURE KEY

LED PAR (10-CHANNEL)

RBG LED TAPE (5-CHANNEL)

WW / CW LED TAPE (5-CHANNEL)

LIGHTING FIXTURE LABEL LEGEND

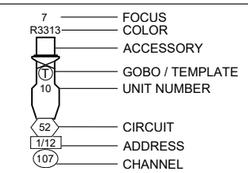

THIS DRAWING IS MEANT ONLY TO CONVEY VISUAL, CONCEPTUAL AND DESIGN IDEAS. THE LIGHTING DESIGNER WILL NOT ASSUME RESPONSIBILITY FOR IMPROPER ENGINEERING, CONSTRUCTION, HANDLING, INSTALLATION, WIRING, POWER CONSIDERATIONS OR USE OF THE LIGHTING EQUIPMENT.

DRAFTED BY: MK

1/8" = 1'-0"

2024-11-14 | A

PLATE **11** OF 17

SET ELECTRICS & LED TAPE DETAILS

TL-10

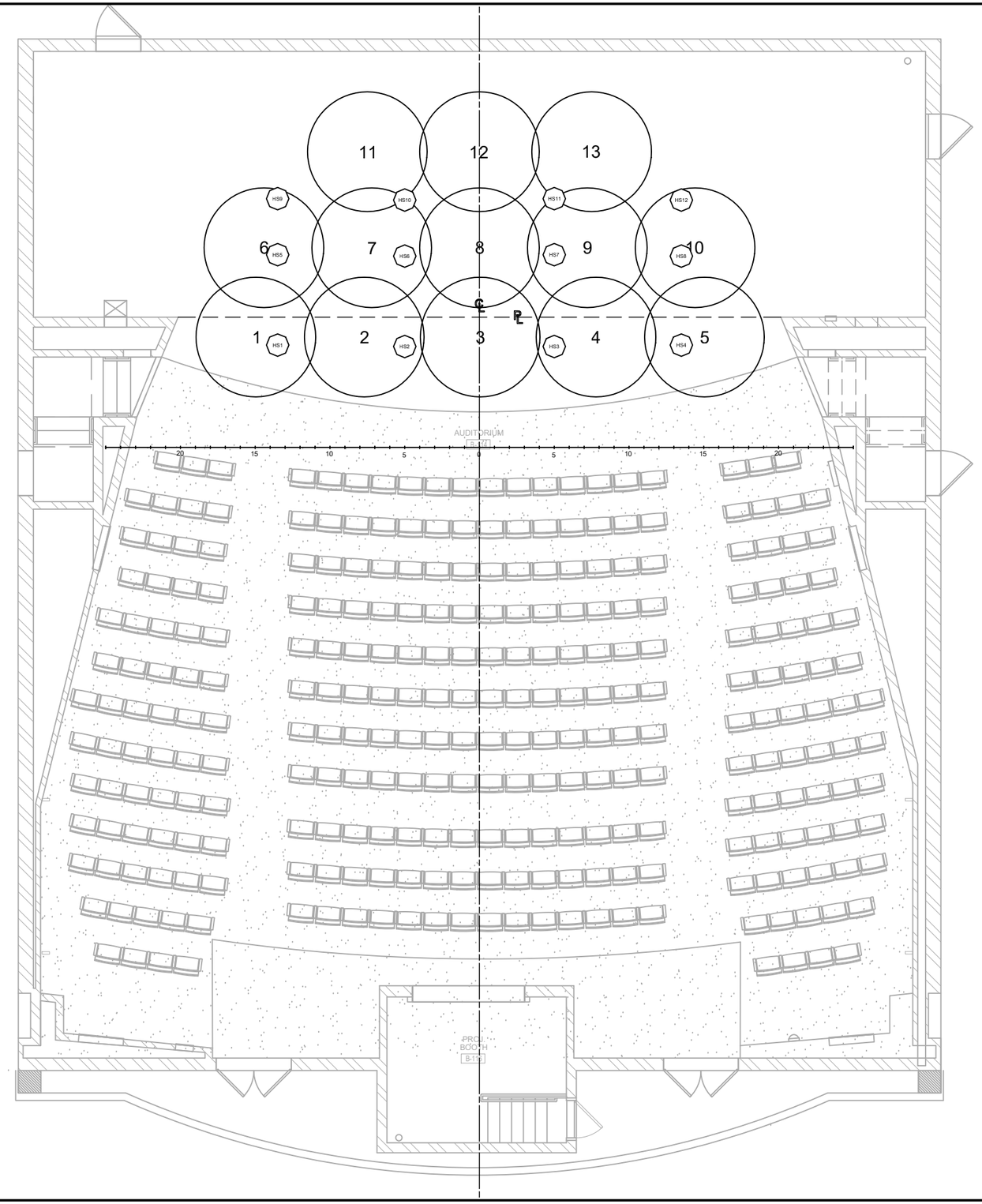

LIGHTING DOCUMENTATION RECOMMENDED PRACTICE

SYRACUSE, NY

USITT

USITT LIGHTING COMMISSION

THIS DRAWING IS MEANT ONLY TO CONVEY VISUAL, CONCEPTUAL AND DESIGN IDEAS. THE LIGHTING DESIGNER WILL NOT ASSUME RESPONSIBILITY FOR IMPROPER ENGINEERING, CONSTRUCTION, HANDLING, INSTALLATION, WIRING, POWER CONSIDERATIONS OR USE OF THE LIGHTING EQUIPMENT.

DRAFTED BY: MH

1/8" = 1'-0"

2024-11-14 | A

PLATE **12** OF 17

FOCUS POINT LAYOUT

TL-11

LD: [Designer Name]
ALD: [Designer Name]

[Show Name] Instrument Schedule
[Production Company]

Revision Date
Lead Electrician

Position	Unit	Instrument	Purpose	Chan	Circuit	Univ	Addr	Mode	Color	Gobo	Focus
1st Electric	1	Conv. ERS 26 Deg	HS SL	56	37	1	37		R16		HS7
	1	Conv. ERS 26 Deg	HS SL	53	24	1	24		R16		HS3
	2	Wash Mover	Top Wash	15	34	3	165	26CH Extd			
	3	Conv. ERS 26 Deg	HS SL	55	38	1	38		R16		HS6
	4	Wash Mover	Top Wash	14	34	3	139	26CH Extd			
	5	LED ERS 50 Deg	BL TX	133	35	3	21	DIR 10CH		ME-1027	5
	6	Conv. ERS 26 Deg	HS SR	66	39	1	39		R16		HS8
	7	LED ERS 50 Deg	BL TX	132	35	3	11	DIR 10CH		ME-1027	3
	8	Wash Mover	Top Wash	13	34	3	113	26CH Extd			
	9	Conv. ERS 26 Deg	HS SL	54	40	1	40		R16		HS5
	10	LED ERS 50 Deg	BL TX	131	35	3	1	DIR 10CH		ME-1027	1
	11	Wash Mover	Top Wash	12	36	3	87	26CH Extd			
	12	Conv. ERS 26 Deg	HS SR	65	41	1	41		R16		HS7
	13	Wash Mover	Top Wash	11	36	3	61	26CH Extd			
	14	Conv. ERS 26 Deg	HS SR	64	42	1	42		R16		HS6
2nd Electric	1	Conv. ERS 26 Deg	HS SL	59	44	1	44		R16		HS11
	2	Wash Mover	Top Wash	20	51	3	295	26CH Extd			
	3	Conv. ERS 26 Deg	HS SL	58	45	1	45		R16		HS10
	4	Wash Mover	Top Wash	19	51	3	269	26CH Extd			
	5	LED ERS 50 Deg	BL TX	136	52	3	51	DIR 10CH		ME-1027	9
	6	Conv. ERS 26 Deg	HS SR	69	46	1	46		R16		HS4
	7	LED ERS 50 Deg	BL TX	135	52	3	41	DIR 10CH		ME-1027	8
	8	Wash Mover	Top Wash	18	51	3	243	26CH Extd			
	9	Conv. ERS 26 Deg	HS SL	57	47	1	47		R16		HS9
	10	LED ERS 50 Deg	BL TX	134	52	3	31	DIR 10CH		ME-1027	7
	11	Wash Mover	Top Wash	17	53	3	217	26CH Extd			
	12	Conv. ERS 26 Deg	HS SR	68	48	1	48		R16		HS11
	13	Wash Mover	Top Wash	16	53	3	191	26CH Extd			
	14	Conv. ERS 26 Deg	HS SR	67	49	1	49		R16		HS10
3rd Electric	1	SixBar 1000	Cyc Lights	30	54	4	325	6-Cell			Cyc
	2	SixBar 1000	Cyc Lights	29	54	4	289	6-Cell			Cyc
	3	SixBar 1000	Cyc Lights	28	55	4	253	6-Cell			Cyc
	4	SixBar 1000	Cyc Lights	27	55	4	217	6-Cell			Cyc
	5	SixBar 1000	Cyc Lights	26	56	4	181	6-Cell			Cyc
	6	SixBar 1000	Cyc Lights	25	56	4	145	6-Cell			Cyc
	7	SixBar 1000	Cyc Lights	24	62	4	109	6-Cell			Cyc
	8	SixBar 1000	Cyc Lights	23	62	4	73	6-Cell			Cyc
	9	SixBar 1000	Cyc Lights	22	63	4	37	6-Cell			Cyc
	10	SixBar 1000	Cyc Lights	21	63	4	1	6-Cell			Cyc
AP Pipe	2	Conv. ERS 26 Deg	HS SL	52	25	1	25		R16		HS2
	3	Conv. ERS 26 Deg	FL	113	26	1	26		R3313		13
	4	Conv. ERS 26 Deg	HS SR	63	27	1	27		R16		HS4
	5	Conv. ERS 26 Deg	FL	112	28	1	28		R3313		12
	6	Conv. ERS 26 Deg	HS SL	51	29	1	29		R16		HS1
	7	Conv. ERS 26 Deg	FL	111	30	1	30		R3313		11
	8	Conv. ERS 26 Deg	HS SR	62	31	1	31		R16		HS3
	9	Conv. ERS 26 Deg	HS SR	61	32	1	32		R16		HS2
FLOOR	1	RGBA Cube	Footlights	161	78	5	41		20x20		
	2	RGBA Cube	Footlights	160	78	5	49		20x20		
	3	RGBA Cube	Footlights	159	78	5	57		20x20		
	4	RGBA Cube	Footlights	158	78	5	65		20x20		
	5	RGBA Cube	Footlights	157	78	5	73		20x20		
	6	RGBA Cube	Footlights	156	78	5	81		20x20		
	7	RGBA Cube	Footlights	155	78	5	89		20x20		
	8	RGBA Cube	Footlights	154	78	5	97		20x20		
	9	RGBA Cube	Footlights	153	78	5	105		20x20		
	10	RGBA Cube	Footlights	152	78	5	113		20x20		
	11	RGBA Cube	Footlights	151	78	5	121		20x20		
FOH Boom L	1	LED ERS 26 Deg	TX Tone	122	22	2	139	DIR 10CH		R71043	2
	2	LED ERS 26 Deg	TX Tone	124	22	2	159	DIR 10CH		R71043	4
	3	Profile Mover	TX Tone	5	21	2	169	32CH			
FOH Boom R	1	LED ERS 26 Deg	TX Tone	121	18	2	129	DIR 10CH		R71043	4
	2	LED ERS 26 Deg	TX Tone	123	18	2	149	DIR 10CH		R71043	2
	3	Profile Mover	TX Tone	6	17	2	201	32CH			

LD: [Designer Name]
ALD: [Designer Name]

[Show Name] Instrument Schedule
[Production Company]

Revision Date
Lead Electrician

Position	Unit	Instrument	Purpose	Chan	Circuit	Univ	Addr	Mode	Color	Gobo	Focus
FOH Cat 1	1	Conv. ERS 26 Deg	FL	105	3	1	3		R3313		5
	2	Conv. ERS 19 Deg	FL	110	4	1	4		R3313		10
	3	Profile Mover	FOH Profile	4	2	2	97	32CH			
	4	Conv. ERS 26 Deg	FL	104	5	1	5		R3313		4
	5	Conv. ERS 19 Deg	FL	109	6	1	6		R3313		9
	6	Profile Mover	FOH Profile	3	2	2	65	32CH			
	7	Conv. ERS 19 Deg	FL	108	7	1	7		R3313		8
	8	Conv. ERS 26 Deg	FL	103	8	1	8		R3313		3
	9	Profile Mover	FOH Profile	2	1	2	33	32CH			
	10	Conv. ERS 19 Deg	FL	107	12	1	12		R3313		7
	11	Conv. ERS 26 Deg	FL	102	13	1	13		R3313		2
	12	Profile Mover	FOH Profile	1	1	2	1	32CH			
	13	Conv. ERS 19 Deg	FL	106	14	1	14		R3313		6
	14	Conv. ERS 26 Deg	FL	101	15	1	15		R3313		1
Set Electrics	1	LED Par	Set Electrics	203	72	6	21	DIR 10CH			
	2	LED Par	Set Electrics	202	72	6	11	DIR 10CH			
	3	LED Par	Set Electrics	201	72	6	1	DIR 10CH			
	4	RGB Pixel	Set Electrics	204	87	6	31	3Ch/Per			
	5	RGB Pixel	Set Electrics	205	87	6	260	3Ch/Per			
SL Boom #1	1	Conv. ERS 36 Deg	Heads	91	65	1	65		R368		Heads
	2	Conv. ERS 36 Deg	Mids	81	65	1	65		N/C		Mids
	3	LED BAR	Side Tone	85	64	5	129	6-Cell			X Stage
	4	LED ERS 26 Deg	Shins	71	64	5	1	DIR 10CH	R132	G635	Shins
SL Boom #2	1	Conv. ERS 36 Deg	Heads	93	68	1	68		R368		Heads
	2	Conv. ERS 36 Deg	Mids	83	69	1	69		N/C		Mids
	3	LED BAR	Side Tone	87	71	5	165	6-Cell			X Stage
	4	LED ERS 26 Deg	Shins	73	71	5	11	DIR 10CH	R132	G635	Shins
SR Boom #1	1	Conv. ERS 36 Deg	Heads	92	76	1	76		R368		Heads
	2	Conv. ERS 36 Deg	Mids	82	77	1	77		N/C		Mids
	3	LED CYC	Side Tone	86	79	5	237	6-Cell			X Stage
	4	LED ERS 26 Deg	Shins	72	79	5	31	DIR 10CH	R132	G635	Shins
SR Boom #2	1	Conv. ERS 36 Deg	Heads	94	82	1	82		R368		Heads
	2	Conv. ERS 36 Deg	Mids	84	81	1	81		N/C		Mids
	3	LED CYC	Side Tone	88	80	5	201	6-Cell			X Stage
	4	LED ERS 26 Deg	Shins	74	80	5	21	DIR 10CH	R132	G635	Shins

LIGHTING DOCUMENTATION RECOMMENDED PRACTICE

SYRACUSE, NY

USITT

USITT LIGHTING COMMISSION

THIS DRAWING IS MEANT ONLY TO CONVEY VISUAL, CONCEPTUAL AND DESIGN IDEAS. THE LIGHTING DESIGNER WILL NOT ASSUME RESPONSIBILITY FOR IMPROPER ENGINEERING, CONSTRUCTION, HANDLING, INSTALLATION, WIRING, POWER CONSIDERATIONS OR USE OF THE LIGHTING EQUIPMENT.

DRAFTED BY: MH

NTS

2024-11-14 | A

PLATE **13** OF 17

INSTRUMENT SCHEDULE

TL-12

LD: [Designer Name]
ALD: [Designer Name]

[Show Name] Channel Hookup
[Production Company]

Revision Date
Lead Electrician

Chan	Circuit	Univ	Addr	Instrument	Mode	Purpose	Position	Unit	Color	Gobo	Focus
1	1	2	1	Profile Mover	32CH	FOH Profile	FOH Cat 1	12			
2	1	2	33	Profile Mover	32CH	FOH Profile	FOH Cat 1	9			
3	2	2	65	Profile Mover	32CH	FOH Profile	FOH Cat 1	6			
4	2	2	97	Profile Mover	32CH	FOH Profile	FOH Cat 1	3			
5	21	2	169	Profile Mover	32CH	TX Tone	FOH Boom L	3			
6	17	2	201	Profile Mover	32CH	TX Tone	FOH Boom R	3			
11	36	3	61	Wash Mover	26CH Extd	Top Wash	1st Electric	13			
12	36	3	87	Wash Mover	26CH Extd	Top Wash	1st Electric	11			
13	34	3	113	Wash Mover	26CH Extd	Top Wash	1st Electric	8			
14	34	3	139	Wash Mover	26CH Extd	Top Wash	1st Electric	4			
15	34	3	165	Wash Mover	26CH Extd	Top Wash	1st Electric	2			
16	53	3	191	Wash Mover	26CH Extd	Top Wash	2nd Electric	13			
17	53	3	217	Wash Mover	26CH Extd	Top Wash	2nd Electric	11			
18	51	3	243	Wash Mover	26CH Extd	Top Wash	2nd Electric	8			
19	51	3	269	Wash Mover	26CH Extd	Top Wash	2nd Electric	4			
20	51	3	295	Wash Mover	26CH Extd	Top Wash	2nd Electric	2			
21	63	4	1	SixBar 1000	6-Cell	Cyc Lights	3rd Electric	10			Cyc
22	63	4	37	SixBar 1000	6-Cell	Cyc Lights	3rd Electric	9			Cyc
23	62	4	73	SixBar 1000	6-Cell	Cyc Lights	3rd Electric	8			Cyc
24	62	4	109	SixBar 1000	6-Cell	Cyc Lights	3rd Electric	7			Cyc
25	56	4	145	SixBar 1000	6-Cell	Cyc Lights	3rd Electric	6			Cyc
26	56	4	181	SixBar 1000	6-Cell	Cyc Lights	3rd Electric	5			Cyc
27	55	4	217	SixBar 1000	6-Cell	Cyc Lights	3rd Electric	4			Cyc
28	55	4	253	SixBar 1000	6-Cell	Cyc Lights	3rd Electric	3			Cyc
29	54	4	289	SixBar 1000	6-Cell	Cyc Lights	3rd Electric	2			Cyc
30	54	4	325	SixBar 1000	6-Cell	Cyc Lights	3rd Electric	1			Cyc
51	29	1	29	Conv. ERS 26 Deg		HS SL	AP Pipe	6	R16		HS1
52	25	1	25	Conv. ERS 26 Deg		HS SL	AP Pipe	2	R16		HS2
53	24	1	24	Conv. ERS 26 Deg		HS SL	1st Electric	1	R16		HS3
54	40	1	40	Conv. ERS 26 Deg		HS SL	1st Electric	9	R16		HS5
55	38	1	38	Conv. ERS 26 Deg		HS SL	1st Electric	3	R16		HS6
56	37	1	37	Conv. ERS 26 Deg		HS SL	1st Electric	1	R16		HS7
57	47	1	47	Conv. ERS 26 Deg		HS SL	2nd Electric	9	R16		HS9
58	45	1	45	Conv. ERS 26 Deg		HS SL	2nd Electric	3	R16		HS10
59	44	1	44	Conv. ERS 26 Deg		HS SL	2nd Electric	1	R16		HS11
61	32	1	32	Conv. ERS 26 Deg		HS SR	AP Pipe	9	R16		HS2
62	31	1	31	Conv. ERS 26 Deg		HS SR	AP Pipe	8	R16		HS3
63	27	1	27	Conv. ERS 26 Deg		HS SR	AP Pipe	4	R16		HS4
64	42	1	42	Conv. ERS 26 Deg		HS SR	1st Electric	14	R16		HS6
65	41	1	41	Conv. ERS 26 Deg		HS SR	1st Electric	12	R16		HS7
66	39	1	39	Conv. ERS 26 Deg		HS SR	1st Electric	6	R16		HS8
67	49	1	49	Conv. ERS 26 Deg		HS SR	2nd Electric	14	R16		HS10
68	48	1	48	Conv. ERS 26 Deg		HS SR	2nd Electric	12	R16		HS11
69	46	1	46	Conv. ERS 26 Deg		HS SR	2nd Electric	6	R16		HS4
71	64	5	1	LED ERS 26 Deg	DIR 10CH	Shins	SL Boom #1	4	R132	G635	Shins
72	79	5	31	LED ERS 26 Deg	DIR 10CH	Shins	SR Boom #1	4	R132	G635	Shins
73	71	5	11	LED ERS 26 Deg	DIR 10CH	Shins	SL Boom #2	4	R132	G635	Shins
74	80	5	21	LED ERS 26 Deg	DIR 10CH	Shins	SR Boom #2	4	R132	G635	Shins
81	65	1	65	Conv. ERS 36 Deg		Mids	SL Boom #1	2	N/C		Mids
82	77	1	77	Conv. ERS 36 Deg		Mids	SR Boom #1	2	N/C		Mids
83	69	1	69	Conv. ERS 36 Deg		Mids	SL Boom #2	2	N/C		Mids
84	81	1	81	Conv. ERS 36 Deg		Mids	SR Boom #2	2	N/C		Mids
85	64	5	129	LED BAR	6-Cell	Side Tone	SL Boom #1	3			X Stage
86	79	5	237	LED CYC	6-Cell	Side Tone	SR Boom #1	3			X Stage
87	71	5	165	LED BAR	6-Cell	Side Tone	SL Boom #2	3			X Stage
88	80	5	201	LED CYC	6-Cell	Side Tone	SR Boom #2	3			X Stage
91	66	1	66	Conv. ERS 36 Deg		Heads	SL Boom #1	1	R368		Heads
92	76	1	76	Conv. ERS 36 Deg		Heads	SR Boom #1	1	R368		Heads
93	68	1	68	Conv. ERS 36 Deg		Heads	SL Boom #2	1	R368		Heads
94	82	1	82	Conv. ERS 36 Deg		Heads	SR Boom #2	1	R368		Heads
101	15	1	15	Conv. ERS 26 Deg		FL	FOH Cat 1	14	R3313		1
102	13	1	13	Conv. ERS 26 Deg		FL	FOH Cat 1	11	R3313		2

LD: [Designer Name]
ALD: [Designer Name]

[Show Name] Channel Hookup
[Production Company]

Revision Date
Lead Electrician

Chan	Circuit	Univ	Addr	Instrument	Mode	Purpose	Position	Unit	Color	Gobo	Focus
103	8	1	8	Conv. ERS 26 Deg		FL	FOH Cat 1	8	R3313		3
104	5	1	5	Conv. ERS 26 Deg		FL	FOH Cat 1	4	R3313		4
105	3	1	3	Conv. ERS 26 Deg		FL	FOH Cat 1	1	R3313		5
106	14	1	14	Conv. ERS 19 Deg		FL	FOH Cat 1	13	R3313		6
107	12	1	12	Conv. ERS 19 Deg		FL	FOH Cat 1	10	R3313		7
108	7	1	7	Conv. ERS 19 Deg		FL	FOH Cat 1	7	R3313		8
109	6	1	6	Conv. ERS 19 Deg		FL	FOH Cat 1	5	R3313		9
110	4	1	4	Conv. ERS 19 Deg		FL	FOH Cat 1	2	R3313		10
111	30	1	30	Conv. ERS 26 Deg		FL	AP Pipe	7	R3313		11
112	28	1	28	Conv. ERS 26 Deg		FL	AP Pipe	5	R3313		12
113	26	1	26	Conv. ERS 26 Deg		FL	AP Pipe	3	R3313		13
121	18	2	129	LED ERS 26 Deg	DIR 10CH	TX Tone	FOH Boom R	1		R71043	4
122	22	2	139	LED ERS 26 Deg	DIR 10CH	TX Tone	FOH Boom L	1		R71043	2
123	18	2	149	LED ERS 26 Deg	DIR 10CH	TX Tone	FOH Boom R	2		R71043	2
124	22	2	159	LED ERS 26 Deg	DIR 10CH	TX Tone	FOH Boom L	2		R71043	4
131	35	3	1	LED ERS 50 Deg	DIR 10CH	BL TX	1st Electric	10		ME-1027	1
132	35	3	11	LED ERS 50 Deg	DIR 10CH	BL TX	1st Electric	7		ME-1027	3
133	35	3	21	LED ERS 50 Deg	DIR 10CH	BL TX	1st Electric	5		ME-1027	5
134	52	3	31	LED ERS 50 Deg	DIR 10CH	BL TX	2nd Electric	10		ME-1027	7
135	52	3	41	LED ERS 50 Deg	DIR 10CH	BL TX	2nd Electric	7		ME-1027	8
136	52	3	51	LED ERS 50 Deg	DIR 10CH	BL TX	2nd Electric	5		ME-1027	9
151	78	5	121	RGBA Cube	4 CH	Footlights	FLOOR	11	20x20		
152	78	5	113	RGBA Cube	4 CH	Footlights	FLOOR	10	20x20		
153	78	5	105	RGBA Cube	4 CH	Footlights	FLOOR	9	20x20		
154	78	5	97	RGBA Cube	4 CH	Footlights	FLOOR	8	20x20		
155	78	5	89	RGBA Cube	4 CH	Footlights	FLOOR	7	20x20		
156	78	5	81	RGBA Cube	4 CH	Footlights	FLOOR	6	20x20		
157	78	5	73	RGBA Cube	4 CH	Footlights	FLOOR	5	20x20		
158	78	5	65	RGBA Cube	4 CH	Footlights	FLOOR	4	20x20		
159	78	5	57	RGBA Cube	4 CH	Footlights	FLOOR	3	20x20		
160	78	5	49	RGBA Cube	4 CH	Footlights	FLOOR	2	20x20		
161	78	5	41	RGBA Cube	4 CH	Footlights	FLOOR	1	20x20		
201	72	6	1	LED Par	DIR 10CH	Set Electrics	SET	3			
202	72	6	11	LED Par	DIR 10CH	Set Electrics	SET	2			
203	72	6	21	LED Par	DIR 10CH	Set Electrics	SET	1			
204	87	6	31	RGB Pixel	3 CH/Per	Set Electrics	SET	4			
205	87	6	260	RGB Pixel	3 CH/Per	Set Electrics	SET	5			

LIGHTING DOCUMENTATION RECOMMENDED PRACTICE

SYRACUSE, NY

USITT

USITT LIGHTING COMMISSION

THIS DRAWING IS MEANT ONLY TO CONVEY VISUAL, CONCEPTUAL AND DESIGN IDEAS. THE LIGHTING DESIGNER WILL NOT ASSUME RESPONSIBILITY FOR IMPROPER ENGINEERING, CONSTRUCTION, HANDLING, INSTALLATION, WIRING, POWER CONSIDERATIONS OR USE OF THE LIGHTING EQUIPMENT.

DRAFTED BY: MH

NTS

2024-11-14 | A

PLATE **14** OF 17

CHANNEL HOOKUP

TL-13

Color and Gobo Pull List

Color	Frame Size	# Cuts
R3313	6.25	13
R16	6.25	18
R368	6.25	4
R132	6.25	4
20x20 Lens	Custom	11

Gobo	Quantity
R71043	6
ME-1027	6
G635	4

DMX Address Schedule

Universe 2 Overhead FOH

Fixture	*Channel*	*Ch Mode*	*Address*
Profile Mover	1	32	1
Profile Mover	2	32	33
Profile Mover	3	32	65
Profile Mover	4	32	97
LED ERS 26 Deg	121	10	129
LED ERS 26 Deg	123	10	139
LED ERS 26 Deg	122	10	149
LED ERS 26 Deg	124	10	159
Profile Mover	5	32	169
Profile Mover	6	32	201

Universe 3 Overhead Stage

Fixture	*Channel*	*Ch Mode*	*Address*
LED ERS 50 Deg	131	10	1
LED ERS 50 Deg	132	10	11
LED ERS 50 Deg	133	10	21
LED ERS 50 Deg	134	10	31
LED ERS 50 Deg	135	10	41
LED ERS 50 Deg	136	10	51
Wash Mover	11	26	61
Wash Mover	12	26	87
Wash Mover	13	26	113
Wash Mover	14	26	139
Wash Mover	15	26	165
Wash Mover	16	26	191
Wash Mover	17	26	217
Wash Mover	18	26	243
Wash Mover	19	26	269
Wash Mover	20	26	295

Universe 4 Cyc

Fixture	*Channel*	*Ch Mode*	*Address*
LED CYC	21	36	1
LED CYC	21	36	37
LED CYC	21	36	73
LED CYC	21	36	109
LED CYC	21	36	145
LED CYC	21	36	181
LED CYC	21	36	217
LED CYC	21	36	253
LED CYC	21	36	289
LED CYC	21	36	325

Universe 5 Floor

Fixture	*Channel*	*Ch Mode*	*Address*
LED ERS	71	10	1
LED ERS	73	10	72
LED ERS	72	10	145
LED ERS	74	10	217
LED Cube	161	8	291
LED Cube	160	8	452
LED Cube	159	8	612
LED Cube	158	8	771
LED Cube	157	8	929
LED Cube	156	8	1086
LED Cube	155	8	1242
LED Cube	154	8	1397
LED Cube	153	8	1551
LED Cube	152	8	1704
LED Cube	151	8	1856
LED Pixel Bar	85	36	2007
LED Pixel Bar	87	36	2092
LED Pixel Bar	88	36	2179
LED Pixel Bar	86	36	2267

Universe 6 Set Electrics

Fixture	*Channel*	*Ch Mode*	*Address*
LED PAR	201	10	1
LED PAR	202	10	11
LED PAR	203	10	21
RGB Pixel	204	3/Per	31
RGB Pixel	205	3/Per	260

LIGHTING DOCUMENTATION RECOMMENDED PRACTICE

SYRACUSE, NY

USITT

USITT LIGHTING COMMISSION

THIS DRAWING IS MEANT ONLY TO CONVEY VISUAL, CONCEPTUAL AND DESIGN IDEAS. THE LIGHTING DESIGNER WILL NOT ASSUME RESPONSIBILITY FOR IMPROPER ENGINEERING, CONSTRUCTION, HANDLING, INSTALLATION, WIRING, POWER CONSIDERATIONS OR USE OF THE LIGHTING EQUIPMENT.

DRAFTED BY: MH

NTS

2024-11-14 | A

PLATE **15** OF 17

DMX, COLOR, & GOBO SCHEDULE

TL-14

DIMMER PANEL SCHEDULE

DATE: 12/6/2024

LUG #	Module Type	CKT #	AREA / ROOM/DESCRIPTION	LUG #	Module Type	CKT #	AREA / ROOM/DESCRIPTION
1	R20	1	FOH CAT 1 (D5 / CS15)	49	R20	51	2ND ELECTRIC
2		2	FOH CAT 1 (D5 / CS15)	50		52	2ND ELECTRIC
3	D20	7	FOH CAT 1 (D5 / CS15)	51	D20	57	3RD ELECTRIC (D9 / CS10)
4		8	FOH CAT 1 (D5 / CS15)	52		58	3RD ELECTRIC (D9 / CS10)
5	D20	13	FOH CAT 1 (D5 / CS15)	53	TR20AF	63	3RD ELECTRIC (D9 / CS10)
6		14	FOH CAT 1 (D5 / CS15)	54		64	SL BOOM #1 (D12 / OB4F)
7	D20	19	HOUSE BOOM RIGHT (D10 / OB4R)	55	TR20AF	69	SL BOOM #2 (D13 / OB4F)
8		20	HOUSE BOOM LEFT (D11 / OB4R)	56		70	SL BOOM #2 (D13 / OB4F)
9	D20	25	AP PIPE (D6 / CS11)	57	TR20AF	75	USL FLOOR BOX D14 / OB4S)
10		26	AP PIPE (D6 / CS11)	58		76	SR BOOM #1 (D15 / OB4F)
11	D20	31	AP PIPE (D6 / CS11)	59	TR20AF	81	SR BOOM #2 (D16 / OB4F)
12		32	AP PIPE (D6 / CS11)	60		82	SR BOOM #2 (D16 / OB4F)
13	D20	37	1ST ELECTRIC (D7 / CS10)	61	TR20AF	87	USR BOX (D17 / OB4S)
14		38	1ST ELECTRIC (D7 / CS10)	62		88	SPARE
15	D20	43	1ST ELECTRIC (D7 / CS10)	63	D20	93	HOUSE LIGHTS
16		44	2ND ELECTRIC (D8 / CS10)	64		94	HOUSE LIGHTS
17	D20	49	2ND ELECTRIC (D8 / CS10)	65	D20	5	FOH CAT 1 (D5 / CS15)
18		50	2ND ELECTRIC (D8 / CS10)	66		6	FOH CAT 1 (D5 / CS15)
19	R20	55	3RD ELECTRIC (D9 / CS10)	67	D20	11	FOH CAT 1 (D5 / CS15)
20		56	3RD ELECTRIC (D9 / CS10)	68		12	FOH CAT 1 (D5 / CS15)
21	R20	61	3RD ELECTRIC (D9 / CS10)	69	R20	17	HOUSE BOOM RIGHT (D10 / OB4R)
22		62	3RD ELECTRIC (D9 / CS10)	70		18	HOUSE BOOM RIGHT (D10 / OB4R)
23	TR20AF	67	SL BOOM #1 (D12 / OB4F)	71	D20	23	HOUSE BOOM LEFT (D11 / OB4R)
24		68	SL BOOM #2 (D13 / OB4F)	72		24	AP PIPE (D6 / CS11)
25	TR20AF	73	USL FLOOR BOX D14 / OB4S)	73	D20	29	AP PIPE (D6 / CS11)
26		74	USL FLOOR BOX D14 / OB4S)	74		30	AP PIPE (D6 / CS11)
27	TR20AF	79	SR BOOM #1 (D15 / OB4F)	75	R20	35	1ST ELECTRIC (D7 / CS10)
28		80	SR BOOM #2 (D16 / OB4F)	76		36	1ST ELECTRIC (D7 / CS10)
29	TR20AF	85	USR BOX (D17 / OB4S)	77	D20	41	1ST ELECTRIC (D7 / CS10)
30		86	USR BOX (D17 / OB4S)	78		42	1ST ELECTRIC (D7 / CS10)
31	D20	91	WORKLIGHT	79	D20	47	2ND ELECTRIC (D8 / CS10)
32		92	HOUSE LIGHTS	80		48	2ND ELECTRIC (D8 / CS10)
33	D20	3	FOH CAT 1 (D5 / CS15)	81	R20	53	2ND ELECTRIC (D8 / CS10)
34		4	FOH CAT 1 (D5 / CS15)	82		54	3RD ELECTRIC (D9 / CS10)
35	D20	9	FOH CAT 1 (D5 / CS15)	83	D20	59	3RD ELECTRIC (D9 / CS10)
36		10	FOH CAT 1 (D5 / CS15)	84		60	3RD ELECTRIC (D9 / CS10)
37	D20	15	FOH CAT 1 (D5 / CS15)	85	TR20AF	65	SL BOOM #1 (D12 / OB4F)
38		16	HOUSE BOOM RIGHT (D10 / OB4R)	86		66	SL BOOM #1 (D12 / OB4F)
39	R20	21	HOUSE BOOM LEFT (D11 / OB4R)	87	TR20AF	71	SL BOOM #2 (D13 / OB4F)
40		22	HOUSE BOOM LEFT (D11 / OB4R)	88		72	USL FLOOR BOX D14 / OB4S)
41	D20	27	AP PIPE (D6 / CS11)	89	TR20AF	77	SR BOOM #1 (D15 / OB4F)
42		28	AP PIPE (D6 / CS11)	90		78	SR BOOM #1 (D15 / OB4F)
43	R20	33	AP PIPE (D6 / CS11)	91	TR20AF	83	SR BOOM #2 (D16 / OB4F)
44		34	1ST ELECTRIC (D7 / CS10)	92		84	USR BOX (D17 / OB4S)
45	D20	39	1ST ELECTRIC (D7 / CS10)	93	D20	89	AISLE LIGHT
46		40	1ST ELECTRIC (D7 / CS10)	94		90	WORK LIGHTS
47	D20	45	2ND ELECTRIC (D8 / CS10)	95	D20	95	HOUSE LIGHTS
48		46	2ND ELECTRIC (D8 / CS10)	96		96	HOUSE LIGHTS

D20 = DIMMER MODULE, R20= RELAY MODULE, TR20AF = THRUPOWER ADVANCED FEATURE MODULE

LIGHTING DOCUMENTATION RECOMMENDED PRACTICE

SYRACUSE, NY

USITT

USITT LIGHTING COMMISSION

THIS DRAWING IS MEANT ONLY TO CONVEY VISUAL, CONCEPTUAL AND DESIGN IDEAS. THE LIGHTING DESIGNER WILL NOT ASSUME RESPONSIBILITY FOR IMPROPER ENGINEERING, CONSTRUCTION, HANDLING, INSTALLATION, WIRING, POWER CONSIDERATIONS OR USE OF THE LIGHTING EQUIPMENT.

DRAFTED BY: TM

1/8" = 1'-0"

2024-11-14 | A

PLATE **16** OF 17

DIMMER PANEL SCHEDULE

TL-15

General Notes

- All units to have with lamp, c-clamp, pin connector, color frame, and safety cable
- Provide 10% spare lamps for each type of unit including automated
- No substitution without written permission from designer and production electrician
- All LED Fixtures to have Edison connector pigtails
- All Convention fixtures to have 3-pin Stage-pin connector pigtails

Equipment List

Lighting Fixtures:

(05) Conventional 19-Degree Ellipsoidal
(26) Conventional 26-Degree Ellipsoidal
(08) Conventional 36-Degree Ellipsoidal
(22) LED Bar
(08) LED 26-Degree Ellipsoidal
(06) LED 50-Degree Ellipsoidal
(06) LED Profile Mover
(11) LED RGBA Cube
(10) LED Wash Mover
(01) RGB LED Tape
(01) WW/CWW LED Tape

Lighting Fixture Accessories and Hardware:

(4) Lighting 10' Booms with weighted base
(1) General Hazer
(10) Size B Gobo/Template Holder
(10) 7" Top Hat
(150) C-Clamps

Lighting Controls

(1) Lighting Console with 2048 outputs
(2) Touchscreen monitors
(3) Wireless DMX receiver
(1) Wireless DMX transmitter
(1) LED tape power supply & decoder

Lighting Consumables

(10) Gobos
(TBD) Sheets of Gel
(TBD) E-Tape
(TBD) Black Gaff Tape
(TBD) White Gaff Tape
(1) Roll of tieline
(3) Sheets of R3313
(4) Sheets of R16
(1) Sheet of R368
(1) Sheet of R132
(6) Size B R71043 Gobos
(6) Size ME 1027 Gobos
(4) Size B G635 Gobos

Lighting Cable

(TBD) 5' 5-pin DMX Cable
(TBD) 10' 5-pin DMX Cable
(TBD) 15' 5-pin DMX Cable
(TBD) 25' 5-pin DMX Cable
(TBD) 50' 5-pin DMX Cable
(TBD) Two-fers
(TBD) 5' Stage-pin to Edison Adapters
(TBD) 10' Stage-pin to Edison Adapters
(TBD) 25' Stage-pin to Edison Adapters
(TBD) 5' Stage-pin extension cable
(TBD) 10' Stage-pin extension cable
(TBD) 25' Stage-pin extension cable
(TBD) 5' Edison extension cable
(TBD) 10' Edison extension cable
(TBD) 25' Edison extension cable
(TBD) 5' Powercon-to-powercon cables
(TBD) 10' Powercon-to-powercon cables
(TBD) 25' Powercon-to-powercon cables
(TBD) 5' Powercon-to-edison cables
(TBD) 10' Powercon-to-edison cables
(TBD) 25' Powercon-to-edison cables

LIGHTING DOCUMENTATION RECOMMENDED PRACTICE
SYRACUSE, NY
USITT
USITT LIGHTING COMMISSION

THIS DRAWING IS MEANT ONLY TO CONVEY VISUAL, CONCEPTUAL AND DESIGN IDEAS. THE LIGHTING DESIGNER WILL NOT ASSUME RESPONSIBILITY FOR IMPROPER ENGINEERING, CONSTRUCTION, HANDLING, INSTALLATION, WIRING, POWER CONSIDERATIONS OR USE OF THE LIGHTING EQUIPMENT.

DRAFTED BY: TM

NTS		PLATE 17 OF 17
2024-11-14	A	

SHOP ORDER

TL-16