Step 1

Turn OFF the power at the main fuse box. Ensure the wall switch in the room where the fixture is being installed is also in the OFF position.

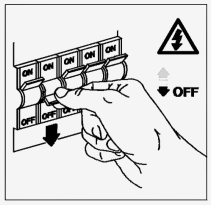

Step 2

Mark and drill the holes in the ceiling according to the layout of the linear hanging kits.

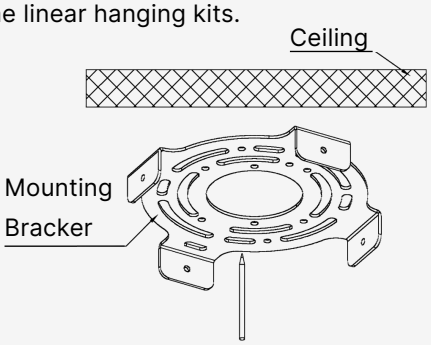

Step 3

Drill four holes (Ø8 mm) in the ceiling aligned with the mounting bracket. Insert plastic anchors into the holes. Attach the mounting bracket to the J-Box using two J-Box screws and secure it to the ceiling with four self-tapping anchor screws. Note: Use a weatherproof, outdoor-rated junction box suitable for wet locations. All conduit entries must be properly sealed to prevent water ingress. Seal all mounting holes, fasteners, and cable entry points with outdoor-rated silicone or gasket material to prevent moisture intrusion.

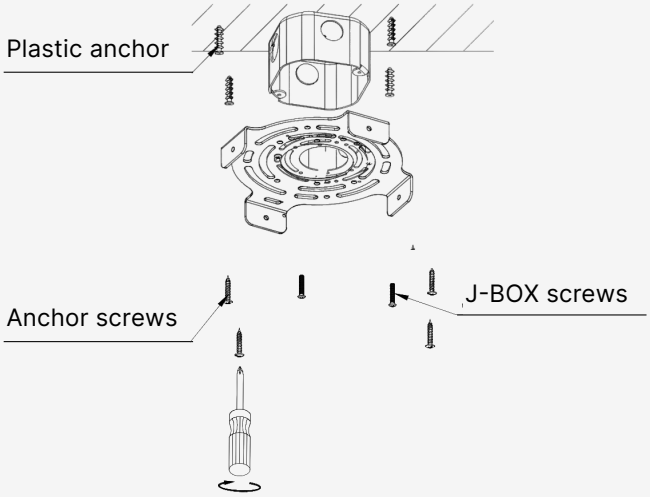

Step 4

Use wire connectors rated for wet locations to connect the L (Live), N (Neutral), G (Ground), DIM+, and DIM− wires. After completing the connections, neatly place all wires and connectors inside the J-BOX.

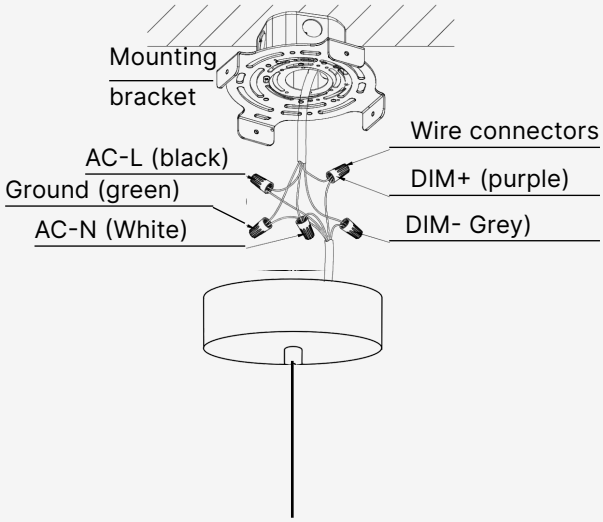

CERTIFICATION

VIVRE

INSTALLATION AND OPERATION MANUAL

Outdoor / Pendant / VRE

IMPORTANT: Carefully read all instructions before installing the fixture. Ignoring these guidelines could result in death, severe injury, or significant property damage. Keep these instructions for future use.

⚠ WARNING! RISK OF FIRE, ELECTRIC SHOCK, OR SERIOUS INJURY

Installation must be performed by a qualified electrician in accordance with the National Electrical Code (NEC) and local regulations.

- Always disconnect power at the circuit breaker before starting work.
- CAUTION – Risk of Fire: Do not install or operate near flammable materials. Do not cover the fixture with any combustible materials.
- Use minimum 90°C rated supply conductors.
- Confirm voltage compatibility before connection.
- Operating temperature range: −20°C to +40°C. Relative humidity must remain between 0% and 95%.
- This fixture is rated IP65. Suitable for outdoor use in damp or wet locations as specified. Do not install in locations exceeding the rated ingress protection.
- Do not tamper with sealed LED components or touch LEDs with bare hands.
- Avoid circuits shared with HVAC or motorized equipment to prevent surges.
- In the event of failure, the driver or transformer may be replaced with a manufacturer-approved equivalent. The use of non-approved replacements is prohibited and will void the warranty.
- Connect fixtures in parallel only; do not daisy-chain.
- Use only UL-listed connectors appropriate for the environment (wet/dry).
- Ensure the mounting surface is level, stable, and structurally adequate.
- Clean the fixture periodically using a soft cloth. Do not use abrasive cleaners or solvents. Ensure power is disconnected before servicing.

INSTALLATION DIAGRAM

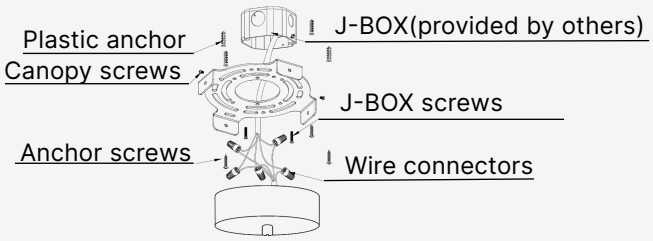

Tools You May Need

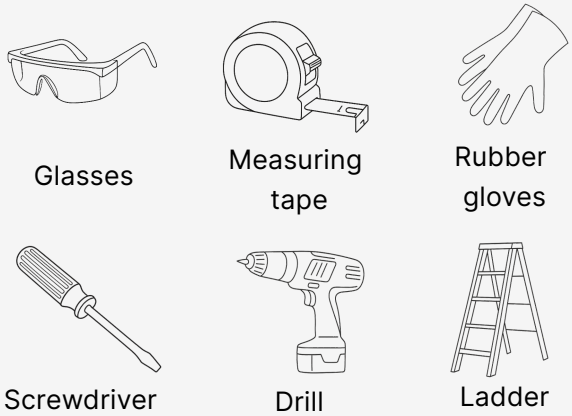

CERTIFICATION

Step 5

Use a screwdriver to adjust the mounting bracket and mounting canopy.

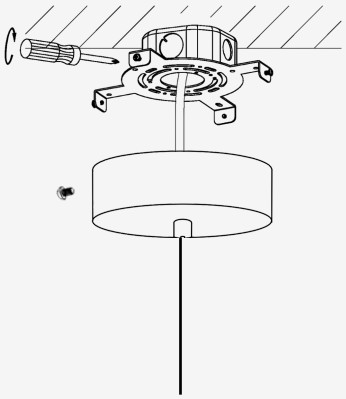

Step 6

Before restoring power, verify that all seals, gaskets, and fasteners are properly secured and that no gaps are present.

Once installation is complete, turn the power ON at the main fuse box. The fixture should now operate properly.

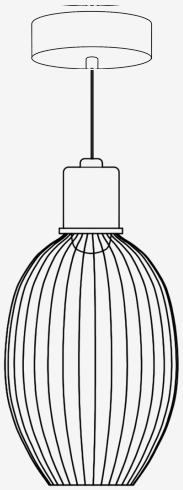

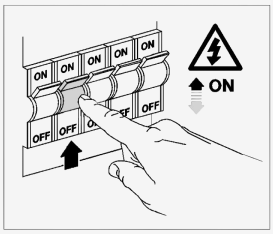

LIMITED WARRANTY

A We Lighting warrants this ceiling-mounted lighting fixture to be free from defects in materials and workmanship under normal use for a period of [5 years] from the date of purchase. This warranty applies only when the fixture is installed and operated in accordance with the instructions in this manual and all applicable building and electrical codes, including the National Electrical Code (NEC).

This warranty does not cover:

- Any damage resulting from incorrect installation, lack of proper maintenance, or mishandling.
- Operation with incompatible power sources, or unauthorized modifications to the product or its components.
- Physical damage caused by mechanical impact, corrosion, or installation in environments exceeding the fixture's ratings (e.g., temperature, humidity).
- Electrical failures due to power surges, voltage spikes, or shared circuits with inductive loads (e.g., HVAC, compressors).
- Installation in locations where the ceiling structure is not rated to support the weight of the fixture.
- Use in damp or wet locations unless the product is rated for such conditions.
- Exposure to grease, oil, dust, or chemicals that may deteriorate housing materials.

To file a warranty claim, contact our Customer Service department and provide proof of purchase, a detailed description of the issue, and photographs if available. A We Lighting reserves the right to inspect the product and determine eligibility under this warranty.

CERTIFICATION