A WE LIGHTING
Designed by we, Customized for you

× Pikart LIGHTS

NIMBA
Pendant / NMB

GENERAL INFORMATION

The NIMBA pendant is defined by its harmonious balance of form and light — a glass sphere gracefully suspended within a refined brass ring. Designed to emit a soft, 360° glow, it creates an atmosphere of warmth and elegance suited for residential and hospitality interiors. Combining timeless geometry with premium materials, NIMBA serves as both a functional light source and a sculptural centerpiece in any space.

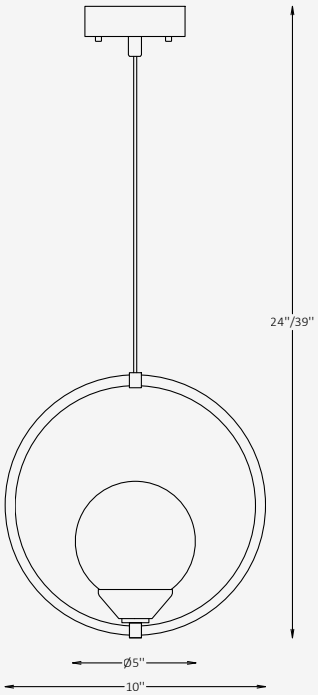

SPECIFICATIONS

Material	Frosted glass, Brass
Diameter	10''
Height	24'' / 39''
Input Voltage	110-120V, 50-60 Hz
Light Source Type	G9 (bulb not included)
Power	max. 60W
Light Distribution	360° Beam
IP Rating	IP 20
Warranty	1 year
Finishes	Green Brass/ Nickel Brass / Light Brass / Dark Brass / RAL finishes

OTHER VERSIONS AVAILABLE

CERTIFICATION

Intertek

Designed and produced by Pikart Lights

A WE LIGHTING
Designed by we, Customized for you

× Pikart LIGHTS

Project

Notes

Ordering Information

Select one item from each category below. If your desired option is unavailable, please contact our team for support or custom solutions.

Code	Diameter Ø	Height	Material
☑ **NMB** Pendant	☑ **10** 10"	☐ **24** 24" ☐ **39** 39"	☑ **FGB** Frosted glass, Brass
Wattage	**Light Distribution**	**Body Finish Option**	**Canopy Finish Option**
☑ **60** max. 60 W	☑ **B36** 360° Beam	☐ **GBR** Green Brass ☐ **NB** Nickel Brass ☐ **LB** Light Brass ☐ **DB** Dark Brass ☐ **RAL** RAL Finishes _____	☐ **GBR** Green Brass ☐ **NB** Nickel Brass ☐ **LB** Light Brass ☐ **DB** Dark Brass ☐ **RAL** RAL Finishes _____
Stem Finish Option	**Stem Finish Option**		
☐ **GBR** Green Brass ☐ **NB** Nickel Brass ☐ **LB** Light Brass ☐ **DB** Dark Brass ☐ **RAL** RAL Finishes _____	☐ **GL** Glossy ☐ **MT** Matte *Available only for RAL K7 Classic Colors		

Finishes

Standard finishes

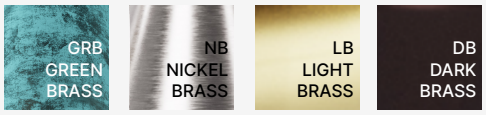

RAL finishes

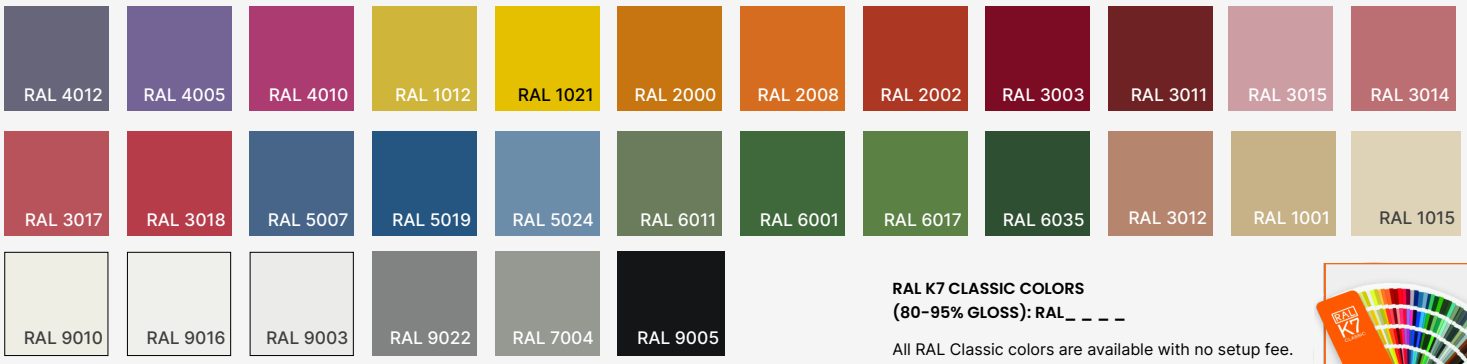

RAL K7 CLASSIC COLORS (80-95% GLOSS): RAL_ _ _ _

All RAL Classic colors are available with no setup fee.

On your specification submittal, choose your RAL color by entering the 4-digit RAL code (e.g., RAL 3003).

Updated: 28/10/2025