A WE LIGHTING
Designed by we, Customized for you

CAMOMILA

Acoustic / Pendant / CML

GENERAL INFORMATION

CAMOMILA is an acoustic pendant defined by its layered sculptural form and integrated direct illumination. The folded P.E.T. felt panels create a dynamic architectural silhouette while helping improve acoustic comfort within the space. Designed for hospitality environments, offices, and residential interiors, CAMOMILA combines decorative presence with functional performance. The integrated light source delivers focused downward illumination, while the soft felt material introduces warmth, texture, and sound-absorbing properties to the environment.

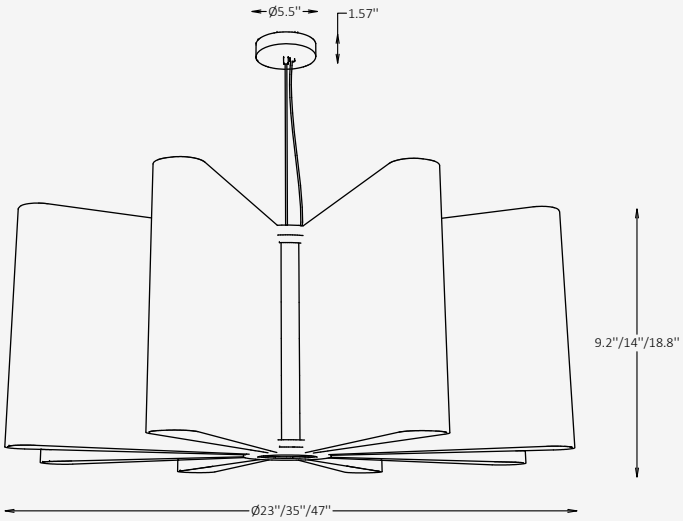

SPECIFICATIONS

Material	Stainless Steel, 100% P.E.T. Felt
Diffuser	Acrylic
Diameter	23" / 35" / 47"
Height	9.2" / 14" / 18.8"
Input Voltage	110-277V, 50-60 Hz
Light Source Type	LED
Power	9W / 15W / 18W / 25W
LED Output	90 lm/W
CCT	2700K / 3000K / 3500K / 4000K
CRI	90
Dimming & Driver	Integral, 0-10V
Light Distribution	Direct
IP Rating	IP 20
Finishes	27 acoustic fiber finishes
Warranty	5 years

OTHER VERSIONS AVAILABLE

CERTIFICATION

Intertek

DRY LOCATION

A WE LIGHTING
Designed by we, Customized for you

Project

Notes

Ordering Information

Select one item from each category below. If your desired option is unavailable, please contact our team for support or custom solutions.

Code	Diameter Ø / Height	Wattage / Lumens	CCT
☑ **CML** Acoustic / Pendant	☐ **23** 23" / 9.2"	☐ **9** 9W / 900 lm	☐ **27** 2700K
	☐ **35** 35" / 14"	☐ **15** 15W / 1350 lm	☐ **30** 3000K
	☐ **47** 47" / 18.8"	☐ **18** 18W / 1620 lm	☐ **35** 3500K
	☐ **Cus** Custom on request _____	☐ **25** 25W / 2250 lm	☐ **40** 4000K
		☐ **Cus** Custom on request _____	☐ **Cus** Custom on request _____

Dimming	Acoustic Fiber Finish Option	Canopy Finish Option	Cord Finish Option
☐ **NN** Non-Dimmable	☐ **AF** Acoustic fibers _____	☐ **ST** Standard _____	☐ **SV** Standard Vinyl _____
☐ **DM** 0-10V		☐ **MC** Metallic _____	☐ **DB** Decorative Braided _____
		☐ **Cus** Custom on request _____	☐ **Cus** Custom on request _____

Cord Length
☐ **L5** 59" (adjustable)
☐ **L11** 118" (adjustable)
☐ **Cus** Custom on request _____

A WE LIGHTING
Designed by we, Customized for you

Project

Notes

Finishes

Acoustic fiber finishes

- V20 MILKSTONE
- V21 OAT STONE
- V10 ASH CLOUD
- V11 SLATE SMOKE
- V13 CARBON SHADOW
- V22 COCOA BARK
- V24 126 CLAYWOOD
- V23 AMBER CLAY
- V31 MUSTARD GLOW
- V36 DIJON GOLD
- V35 TANGERINE
- V32 TERRA EMBER
- V34 VELVET RED
- V40 POWDER ROSE
- V41 PINK PULSE
- V42 FUCHSIA
- V43 AMETHYST
- V70 MULBERRY
- V54 PISTACHIO
- V50 SAGE TEAL
- V55 MARINE GREEN
- V53 FOREST VEIL
- V60 BLUE MIST
- V51 BLUE LAGOON
- V61 BLUE VELVET
- V62 INDIGO NOIR
- V33 PLUM SHADOW

Standard finishes

- RAL 4012
- RAL 4005
- RAL 4010
- RAL 1012
- RAL 1021
- RAL 2000
- RAL 2008
- RAL 2002
- RAL 3003
- RAL 3011
- RAL 3014
- RAL 3017
- RAL 3018
- RAL 5007
- RAL 5019
- RAL 5024
- RAL 6011
- RAL 6001
- RAL 6017
- RAL 3012
- RAL 1001
- RAL 1015
- RAL 9010
- RAL 9016
- RAL 9003
- RAL 9022
- RAL 7004
- RAL 9005

Metallic finishes

- 001 SUNLIT GOLD
- 003 IMPERIAL GOLD
- 005 DESERT BRONZE
- 007 AMBER ALLOY
- 009 SIENNA BRONZE
- 014 REDWOOD GLOW
- 017 AGED CITRON
- 018 ARCTIC STEEL
- 019 CARAMEL BRASS
- 020 CEDAR FLAME
- 021 CHARRED OAK
- 023 OBSIDIAN STEEL

Cord finishes

Standard Vinyl

- SVB BLACK
- SVW WHITE
- SVT TRANSPARENT

Decorative Braided

- IVC IVORY
- SNC SAND
- LNC LEMON
- ORC CORAL
- RBC RUBY
- BLC BLUSH
- FRC FROST
- AZC AZURE
- LMC LIME
- OLC OLIVE
- UMC UMBER
- EDC CEDAR
- NRC NOIR

RAL K7 CLASSIC COLORS (80-95% GLOSS): RAL_ _ _ _

All RAL Classic colors are available with no setup fee.

On your specification submittal, choose your RAL color by entering the 4-digit RAL code (e.g., RAL 3003).