A WE LIGHTING
Designed by we, Customized for you

RIBELLE

Acoustic / Pendant / RBL

GENERAL INFORMATION

RIBELLE is an acoustic pendant luminaire that combines high-performance LED lighting with advanced sound-absorbing properties in a bold sculptural form. Its layered P.E.T. felt construction reduces ambient noise while creating a distinctive architectural centerpiece that enhances both visual comfort and acoustic performance. Designed for offices, hospitality spaces, educational facilities, and collaborative environments, RIBELLE delivers balanced direct illumination with inward and outward light distribution for a comfortable, inviting atmosphere. Available in a wide selection of acoustic felt colors, RAL finishes, and metallic options, it can be tailored to complement a wide variety of contemporary interiors.

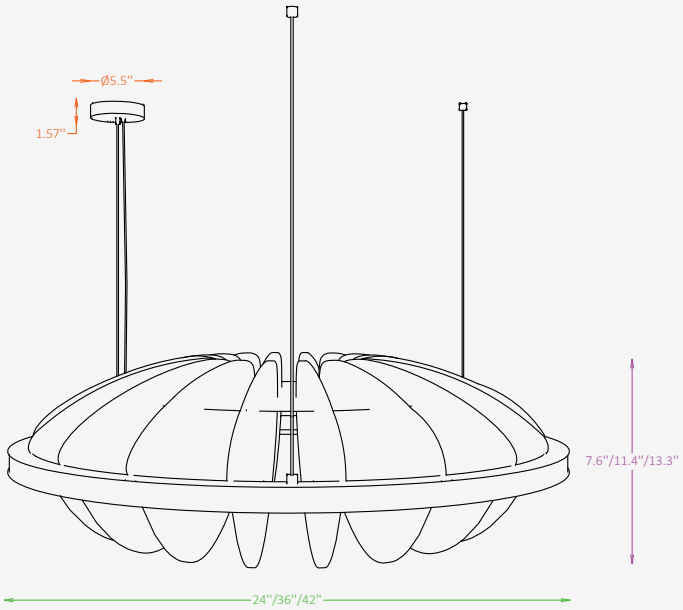

SPECIFICATIONS

Material	Stainless Steel, Acrylic, 100% P.E.T. Felt
Optical Lens	Acrylic, Frosted
Diameter	24" / 36" / 42"
Height	7.6'' / 11.4'' / 13.3''
Input Voltage	110-277V, 50-60 Hz
Light Source Type	LED
Power	25W / 40W / 55W
LED Output	80 lm/W
CCT	2700K / 3000K / 3500K / 4000K
CRI	90
Dimming & Driver	Integral, 0-10V
Light Distribution	Outward + Inward
IP Rating	IP20
Finishes	27 acoustic fiber finishes
Warranty	5 years

OTHER VERSIONS AVAILABLE

CERTIFICATION

Intertek

DRY LOCATION

A WE LIGHTING
Designed by we, Customized for you

Project

Notes

Ordering Information

Select one item from each category below. If your desired option is unavailable, please contact our team for support or custom solutions.

Code	Diameter Ø / Height	Wattage / Lumens	CCT
☑ **RBL** Acoustic / Pendant	☐ **24** 24" / 7.6"	☐ **25** 25W / ↔ 2000 lm	☐ **27** 2700K
	☐ **36** 36" / 11.4"	☐ **40** 40W / ↔ 3200 lm	☐ **30** 3000K
	☐ **42** 42" / 13.3"	☐ **55** 55W / ↔ 4400 lm	☐ **35** 3500K
	☐ **CUS** Custom on request _____	☐ **CUS** Custom on request _____	☐ **40** 4000K
			☐ **CUS** Custom on request _____
Dimming	**Acoustic Fiber Finish Option**	**Canopy Finish Option**	**Cord Finish Option**
☐ **NN** Non-Dimmable	☐ **AF** Acoustic fibers _____	☐ **ST** Standard _____	☐ **SV** Standard Vinyl _____
☐ **DM** 0-10V		☐ **MC** Metallic _____	☐ **DB** Decorative Braided _____
		☐ **CUS** Custom on request _____	☐ **CUS** Custom on request _____
Cord Length			
☐ **L59** 59" (adjustable)			
☐ **L118** 118" (adjustable)			
☐ **CUS** Custom on request _____			

A WE LIGHTING
Designed by we, Customized for you

Project

Notes

Finishes

Acoustic fiber finishes

- V20 MILKSTONE
- V21 OAT STONE
- V10 ASH CLOUD
- V11 SLATE SMOKE
- V13 CARBON SHADOW
- V22 COCOA BARK
- V24 126 CLAYWOOD
- V23 AMBER CLAY
- V31 MUSTARD GLOW
- V36 DIJON GOLD
- V35 TANGERINE
- V32 TERRA EMBER
- V34 VELVET RED
- V40 POWDER ROSE
- V41 PINK PULSE
- V42 FUCHSIA
- V43 AMETHYST
- V70 MULBERRY
- V54 PISTACHIO
- V50 SAGE TEAL
- V55 MARINE GREEN
- V53 FOREST VEIL
- V60 BLUE MIST
- V51 BLUE LAGOON
- V61 BLUE VELVET
- V62 INDIGO NOIR
- V33 PLUM SHADOW

Standard finishes

- RAL 4012
- RAL 4003
- RAL 4005
- RAL 4010
- RAL 1012
- RAL 1018
- RAL 1021
- RAL 2000
- RAL 2008
- RAL 2002
- RAL 3003
- RAL 3011
- RAL 3014
- RAL 3017
- RAL 3018
- RAL 5007
- RAL 5019
- RAL 5024
- RAL 6011
- RAL 6001
- RAL 6017
- RAL 6021
- RAL 6027
- RAL 6033
- RAL 6039
- RAL 3012
- RAL 1001
- RAL 1015
- RAL 9010
- RAL 9016
- RAL 9003
- RAL 9022
- RAL 7004
- RAL 9005

Metallic finishes

- 001 SUNLIT GOLD
- 003 IMPERIAL GOLD
- 005 DESERT BRONZE
- 007 AMBER ALLOY
- 009 SIENNA BRONZE
- 014 REDWOOD GLOW
- 017 AGED CITRON
- 018 ARCTIC STEEL
- 019 CARAMEL BRASS
- 020 CEDAR FLAME
- 021 CHARRED OAK
- 023 OBSIDIAN STEEL

Cord finishes

Standard Vinyl

- SVB BLACK
- SVW WHITE
- SVT TRANSPARENT

Decorative Braided

- IVC IVORY
- SNC SAND
- LNC LEMON
- ORC CORAL
- RBC RUBY
- BLC BLUSH
- FRC FROST
- AZC AZURE
- LMC LIME
- OLC OLIVE
- UMC UMBER
- EDC CEDAR
- NRC NOIR

RAL K7 CLASSIC COLORS (80-95% GLOSS): RAL_ _ _ _

All RAL Classic colors are available with no setup fee.

On your specification submittal, choose your RAL color by entering the 4-digit RAL code (e.g., RAL 3003).