A WE LIGHTING
Designed by we, Customized for you

THORNE C
Column / THR-C

GENERAL INFORMATION

The THORNE C is a clean, vertical column luminaire designed for soft, glare-free 360° Type V illumination in architectural and landscape environments. Featuring a frosted acrylic lens and extruded aluminum body, it offers IP65-rated durability, multiple output and finish options, and seamless integration in large-scale pedestrian spaces.

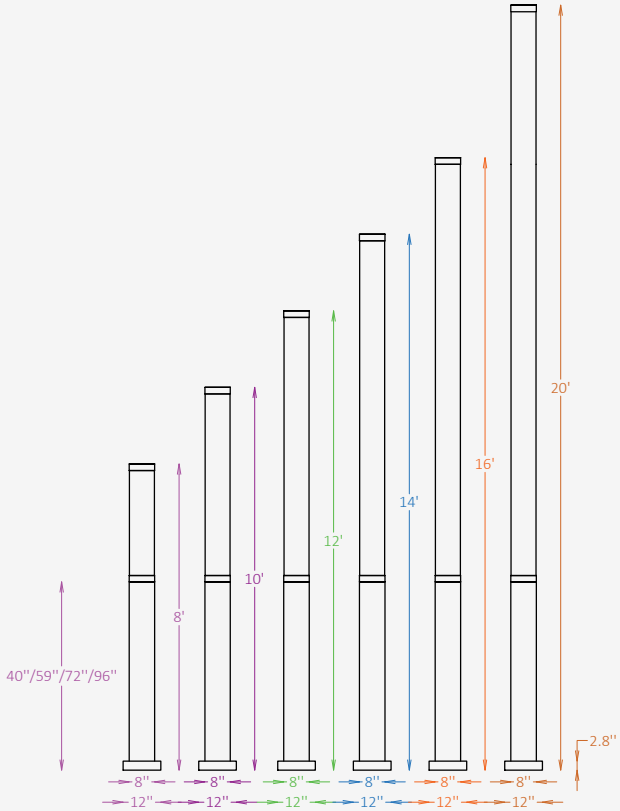

SPECIFICATIONS

Material	Extruded Aluminum + PMMA
Lens	Frosted, Acrylic
Diameter	8"
Overall Height	8' / 10' / 12' / 14' / 16' / 20'
Base Height	40" /59" / 72" / 96"
Light Source Type	LED
Power	23W / 35W / 45W / 60W / 85W
Input Voltage	110-277V, 50-60 Hz
LED Output	90 lm/W
CCT	2200K / 3000K / 3500K / 4000K / 5000K
CRI	90
Dimming & Driver	Integral, 0-10V
Light Distribution	Type V 360° symmetrical light distribution
IP Rating	IP 65
Warranty	5 years
Finishes	16 standard finishes 8 wood-effect finishes 12 metallic finishes Custom on request*
Operating Temp.	-40°C to +50°C (-40°F to +122°F)

OTHER VERSIONS AVAILABLE

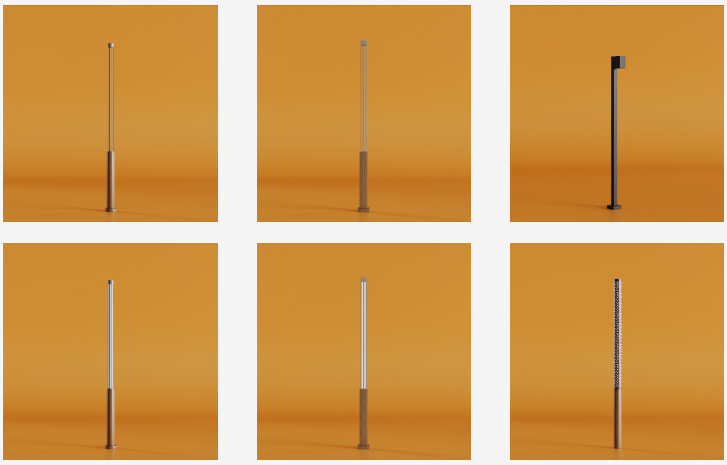

CERTIFICATION

Intertek

A WE LIGHTING
Designed by we, Customized for you

Project

Notes

Ordering Information

Select one item from each category below. If your desired option is unavailable, please contact our team for support or custom solutions.

Code	Diameter Ø	Overall Height	Base Height
☑ **THR-C** Column	☐ **8** 8" ☐ **CUS** Custom on request _____	☐ **8** 8' ☐ **10** 10' ☐ **12** 12' ☐ **14** 14' ☐ **16** 16' ☐ **20** 20' ☐ **CUS** Custom on request _____	☐ **40** 40" ☐ **59** 59" ☐ **72** 72" ☐ **96** 96" ☐ **CUS** Custom on request _____
Material	**CCT**	**Wattage / Lumens**	**Light Distribution**
☑ **AL** Extruded Aluminum + PMMA	☐ **22** 2200K ☐ **30** 3000K ☐ **35** 3500K ☐ **40** 4000K ☐ **50** 5000K ☐ **CUS** Custom on request _____	☐ **23** 23W / 2070 lm ☐ **35** 35W / 3150 lm ☐ **45** 45W / 4050 lm ☐ **60** 60W / 5400 lm ☐ **85** 85W / 7650 lm ☐ **Cus** Custom on request _____	☑ **LD5** Type V 360° symmetrical light distribution
Dimming	**Body Finish Option**	**Base Finish Option**	**Mounting**
☐ **NN** Non-Dimmable ☐ **DM** 0-10V	☐ **ST** Standard _____ ☐ **WE** Wood effect _____ ☐ **MC** Metallic _____ ☐ **Cus** Custom on request _____	☐ **ST** Standard _____ ☐ **WE** Wood effect _____ ☐ **MC** Metallic _____ ☐ **Cus** Custom on request _____	☑ **AB** Anchored Base
Finish Type			
☐ **GL** Glossy ☐ **MT** Matte			

Note: Total height includes both the illuminated lens and the base. Lens height will automatically adjust based on the selected total height and base height.

A WE LIGHTING
Designed by we, Customized for you

Project

Notes

Finishes

Standard finishes

RAL 7004 | RAL 7005 | RAL 9022 | RAL 9023 | RAL 9005 | RAL 8029 | RAL 8015 | RAL 8017 | RAL 8028 | RAL 6013 | RAL 6011 | RAL 6003

RAL 6006 | RAL 9003 | RAL 9010 | RAL 9016

Wood-effect finishes

WO WHITE OAK | OA OAK | HO HONEY OAK | MP MAPLE | WT WALNUT | MG MAHOGANY | DO DARK OAK | ES ESPRESSO

Metallic finishes

001 SUNLIT GOLD | 003 IMPERIAL GOLD | 005 DESERT BRONZE | 007 AMBER ALLOY | 009 SIENNA BRONZE | 014 REDWOOD GLOW | 017 AGED CITRON | 018 ARCTIC STEEL | 019 CARAMEL BRASS | 020 CEDAR FLAME | 021 CHARRED OAK | 023 OBSIDIAN STEEL

RAL K7 CLASSIC COLORS (80-95% GLOSS): RAL_ _ _ _

All RAL Classic colors are available with no setup fee.

On your specification submittal, choose your RAL color by entering the 4-digit RAL code (e.g., RAL 3003).

A WE LIGHTING
Designed by we, Customized for you

Project

Notes

Bolt Patterns

for Anchored Base Installation

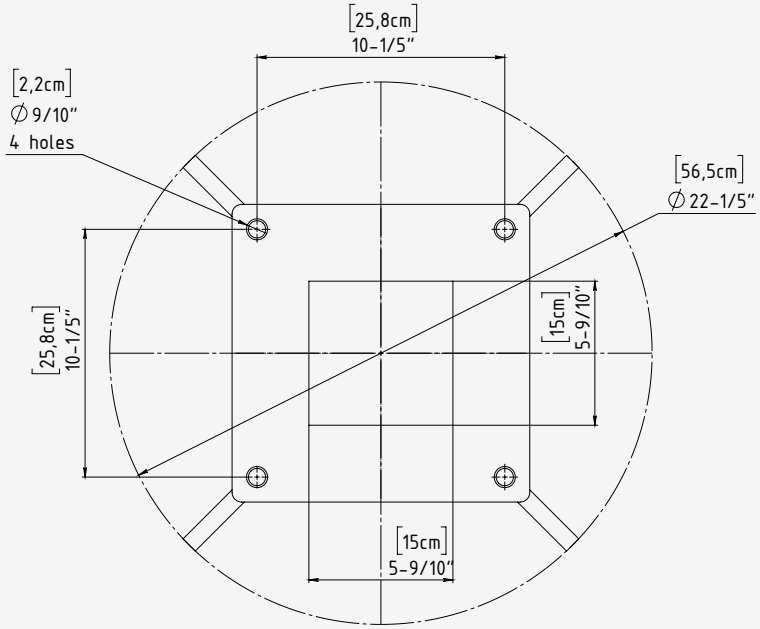

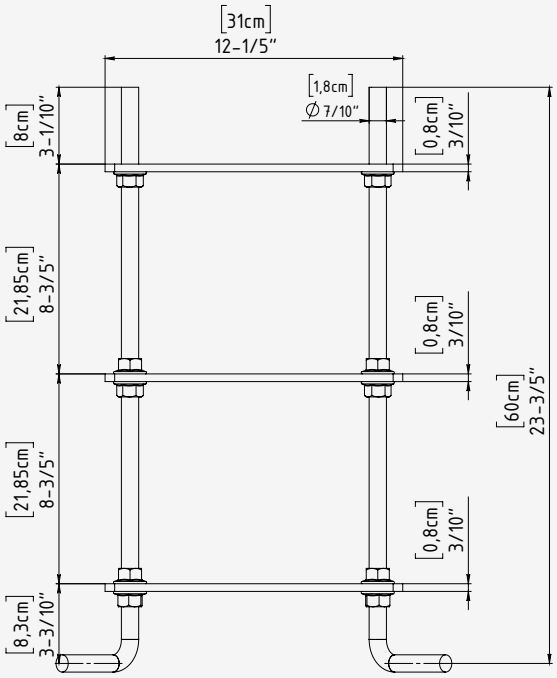

Mounting Type	Anchored Base
Base Plate Material	Stainless Steel
Bolt Mounting Circle	Ø: 4-7/10"
Number of Anchor Kit	4 equally holes (90° apart)
Anchor Kit Size	3/8"-16 x 10" L-Hook concrete anchor bolt

Installation Notes:

- Pour Concrete Footer and Set Anchors
- Prepare the concrete footer formwork. (The footer size should be determined by local frost depth and soil conditions.
- Recommended minimum size: 12" diameter × 20" depth.) Before pouring, assemble the galvanized steel L-bolt anchors with the included steel mounting plate.
- Position the assembly inside the formwork.
- As concrete is poured, insert the anchor assembly into the wet concrete using the mounting plate to ensure correct positioning and alignment.
- Allow clearance through the center opening for electrical wiring, and ensure future access to bolt heads if they will be concealed.
- Ensure all anchors are properly aligned and fully embedded. Allow the concrete to cure completely before proceeding.