A WE LIGHTING
Designed by we, Customized for you

LURIEN
Pendant / LUR



GENERAL INFORMATION

LURIEN is a sculptural multi-arm pendant defined by its intersecting linear structure and softly illuminated circular heads. The composition creates a sense of balance and movement, transforming light into a refined architectural element within the space. Designed to provide diffused direct illumination, LURIEN delivers visual comfort while maintaining functional performance. Its clean geometry and customizable finishes make it well suited for dining areas, collaborative environments, and contemporary interiors, offering both versatility and a strong design presence.

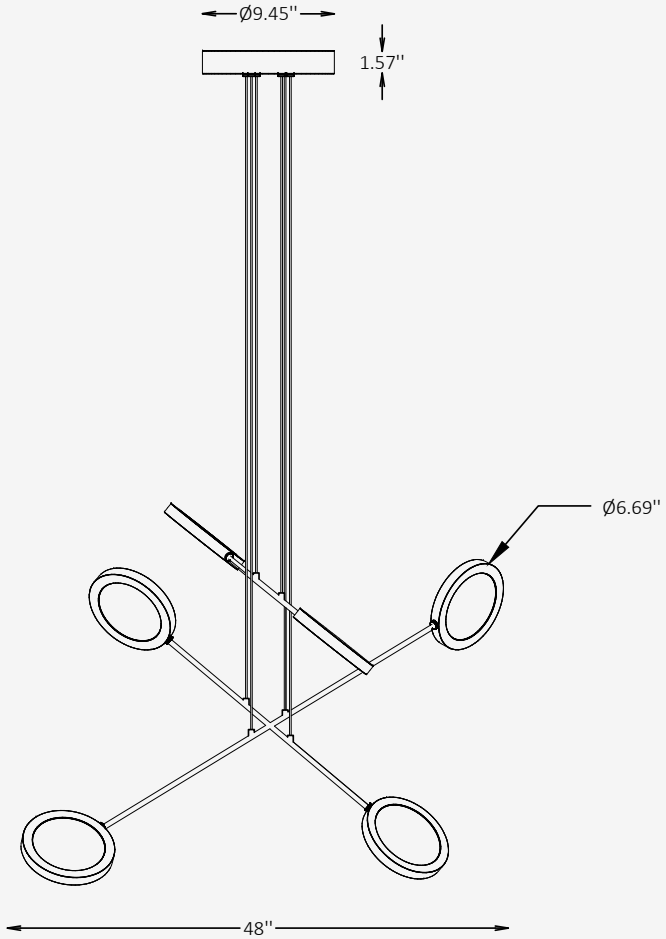

SPECIFICATIONS

Material	Aluminum + Acrylic
Diffuser	Acrylic, Frosted
Diameter	48''
Input Voltage	110-277V, 50-60 Hz
Light Source Type	LED
Power	18W / 24W / 30W / 36W
LED Output	80 lm/W
CCT	2700K / 3000K / 3500K / 4000K
CRI	90
Dimming & Driver	Integral, 0-10V
Light Distribution	Direct, Diffused
IP Rating	IP 20
Warranty	5 years
Finishes	34 RAL finishes 12 metallic finishes

CERTIFICATION

Intertek

A WE LIGHTING
Designed by we, Customized for you

Project

Notes

Ordering Information

Select one item from each category below. If your desired option is unavailable, please contact our team for support or custom solutions.

Code	Wattage / Lumens	CCT	Dimming
☑ **LUR** Pendant	☐ **18** 18W / 1440 lm	☐ **27** 2700K	☐ **NN** Non-Dimmable
	☐ **24** 24W / 1920 lm	☐ **30** 3000K	☐ **DM** 0-10V
	☐ **30** 30W / 2400 lm	☐ **35** 3500K	
	☐ **36** 36W / 2880 lm	☐ **40** 4000K	
	☐ **Cus** Custom on request	☐ **Cus** Custom on request	

Body Finish Option	Canopy Finish Option	Cord Finish Option	Cord Length
☐ **ST** Standard	☐ **ST** Standard	☐ **SV** Standard Vinyl	☐ **L59** 59" (adjustable)
☐ **MC** Metallic	☐ **MC** Metallic	☐ **DB** Decorative Braided	☐ **L118** 118" (adjustable)
☐ **AWE** A We Lighting Design	☐ **AWE** A We Lighting Design	☐ **Cus** Custom on request	☐ **Cus** Custom on request
☐ **Cus** Custom on request	☐ **Cus** Custom on request		

Note: The color combination shown in the photo on the first page of this spec sheet is part of the exclusive A We Lighting Design Palette. This custom palette reflects our brand's identity and is available as a special finish option — A We Lighting Palette*.

A WE LIGHTING
Designed by we, Customized for you

Project

Notes

Finishes

Standard finishes

RAL 4012 | RAL 4003 | RAL 4005 | RAL 4010 | RAL 1012 | RAL 1018 | RAL 1021 | RAL 2000 | RAL 2008 | RAL 2002 | RAL 3003 | RAL 3011

RAL 3014 | RAL 3017 | RAL 3018 | RAL 5007 | RAL 5019 | RAL 5024 | RAL 6011 | RAL 6001 | RAL 6017 | RAL 6021 | RAL 6027 | RAL 6033

RAL 6039 | RAL 3012 | RAL 1001 | RAL 1015 | RAL 9010 | RAL 9016 | RAL 9003 | RAL 9022 | RAL 7004 | RAL 9005

Metallic finishes

001 SUNLIT GOLD | 003 IMPERIAL GOLD | 005 DESERT BRONZE | 007 AMBER ALLOY | 009 SIENNA BRONZE | 014 REDWOOD GLOW | 017 AGED CITRON | 018 ARCTIC STEEL | 019 CARAMEL BRASS | 020 CEDAR FLAME | 021 CHARRED OAK | 023 OBSIDIAN STEEL

Cord finishes

Standard Vinyl

SVB BLACK | SVW WHITE | SVT TRANSPARENT

Decorative Braided

IVC IVORY | SNC SAND | LNC LEMON | ORC CORAL | RBC RUBY | BLC BLUSH | FRC FROST | AZC AZURE | LMC LIME | OLC OLIVE

UMC UMBER | EDC CEDAR | NRC NOIR

RAL K7 CLASSIC COLORS (80-95% GLOSS): RAL_ _ _ _

All RAL Classic colors are available with no setup fee.

On your specification submittal, choose your RAL color by entering the 4-digit RAL code (e.g., RAL 3003).

