A WE LIGHTING
Designed by we, Customized for you

LOCKTOWER SB
Security Bollard / LTR-SB



GENERAL INFORMATION

LOCKTOWER SB is a robust security bollard designed to combine impact resistance with integrated architectural lighting. Manufactured from high-grade stainless steel, it delivers long-term durability for high-traffic and security-sensitive environments while maintaining a clean, contemporary profile. The integrated LED system provides uniform 360° Type V illumination, enhancing visibility and spatial awareness around perimeters and access points. LOCKTOWER SB is ideal for urban streetscapes, commercial entrances, parking facilities, and secured zones where strength, safety, and visual coherence are essential.

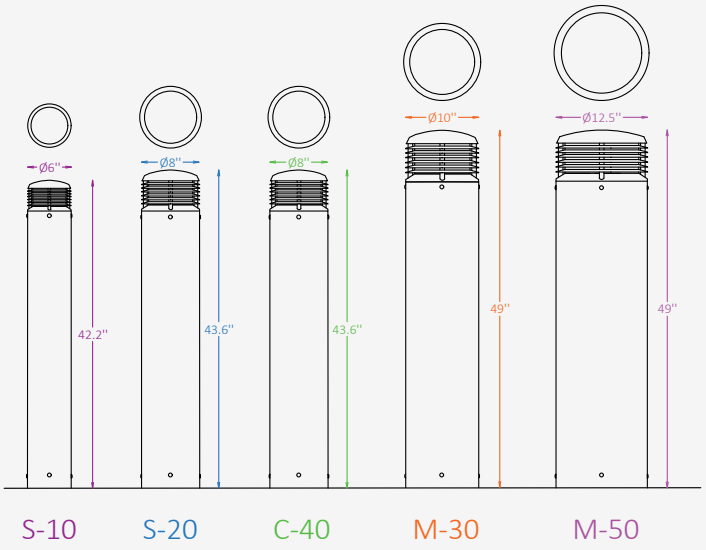

SPECIFICATIONS

Material	Stainless Steel + PMMA
Lens	Frosted, Acrylic
Diameter	6" / 8" / 10" / 12.5"
Height	42.2" / 43.6" / 49"
Light Source Type	LED
Power	7W / 10W / 16W
Input Voltage	110-277V, 50-60 Hz
LED Output	80 lm/W
CCT	2200K / 3000K / 3500K / 4000K
CRI	90
Dimming & Driver	Integral, 0-10V
Light Distribution	Type V — 360° Symmetrical
IP Rating	IP 65
Warranty	5 years
Finishes	19 standard finishes 8 wood-effect finishes 12 metallic finishes Custom on request*
Operating Temp.	-40°C to +50°C (-40°F to +122°F)

OTHER VERSIONS AVAILABLE



CERTIFICATION

Intertek
ASTM INTERNATIONAL

A WE LIGHTING
Designed by we, Customized for you

Project

Notes

Ordering Information

Select one item from each category below. If your desired option is unavailable, please contact our team for support or custom solutions.

Code

- ☑ **LTR-SB** Security Bollard

ASTM Rating / Diameter Ø / Height

- ☐ **S10** ASTM Rating S10 / 6" / 42.2"
- ☐ **S20** ASTM Rating S20 / 8" / 43.6"
- ☐ **C40** ASTM Rating C40 / 8" / 43.6"
- ☐ **M30** ASTM Rating M30 / 10" / 49"
- ☐ **M50** ASTM Rating M50 / 12.5" / 49"

Wattage / Lumens

- ☐ **5** 7 W / 560 lm
- ☐ **8** 10 W / 800 lm
- ☐ **12** 16 W / 1280 lm
- ☐ **Cus** Custom on request _____

Material

- ☑ **SS** Stainless Steel + PMMA

CCT

- ☐ **22** 2200K
- ☐ **35** 3500K
- ☐ **30** 3000K
- ☐ **40** 4000K
- ☐ **CUS** Custom on request _____

Light Distribution

- ☑ **LD5** Type V — 360° Symmetrical

Dimming

- ☐ **NN** Non-Dimmable
- ☐ **DM** 0-10V

Luminaire Head Finish Option

- ☐ **ST** Standard _____
- ☐ **WE** Wood effect _____
- ☐ **MC** Metallic _____
- ☐ **Cus** Custom on request _____

Bollard Body Finish Option

- ☐ **ST** Standard _____
- ☐ **WE** Wood effect _____
- ☐ **MC** Metallic _____
- ☐ **Cus** Custom on request _____

Finishes

Standard finishes

RAL 7004 | RAL 7005 | RAL 9022 | RAL 9023 | RAL 9005 | RAL 3005 | RAL 3012 | RAL 8029 | RAL 8015 | RAL 8017 | RAL 8028 | RAL 2003

RAL 6013 | RAL 6011 | RAL 6003 | RAL 6006 | RAL 9003 | RAL 9010 | RAL 9016

RAL K7 CLASSIC COLORS (80–95% GLOSS): RAL_ _ _ _

All RAL Classic colors are available with no setup fee.

On your specification submittal, choose your RAL color by entering the 4-digit RAL code (e.g., RAL 3003).



Wood-effect finishes

WO WHITE OAK | OA OAK | HO HONEY OAK | MP MAPLE | WT WALNUT | MG MAHOGANY | DO DARK OAK | ES ESPRESSO

Metallic finishes

001 SUNLIT GOLD | 003 IMPERIAL GOLD | 005 DESERT BRONZE | 007 AMBER ALLOY | 009 SIENNA BRONZE | 014 REDWOOD GLOW | 017 AGED CITRON | 018 ARCTIC STEEL | 019 CARAMEL BRASS | 020 CEDAR FLAME | 021 CHARRED OAK | 023 OBSIDIAN STEEL

A We Lighting™ | A We Light & Co, LLC Specifications are subject to change without notice

A WE LIGHTING
Designed by we, Customized for you

Project

Notes

Crash-Tested S10 Bollard Mounting Details

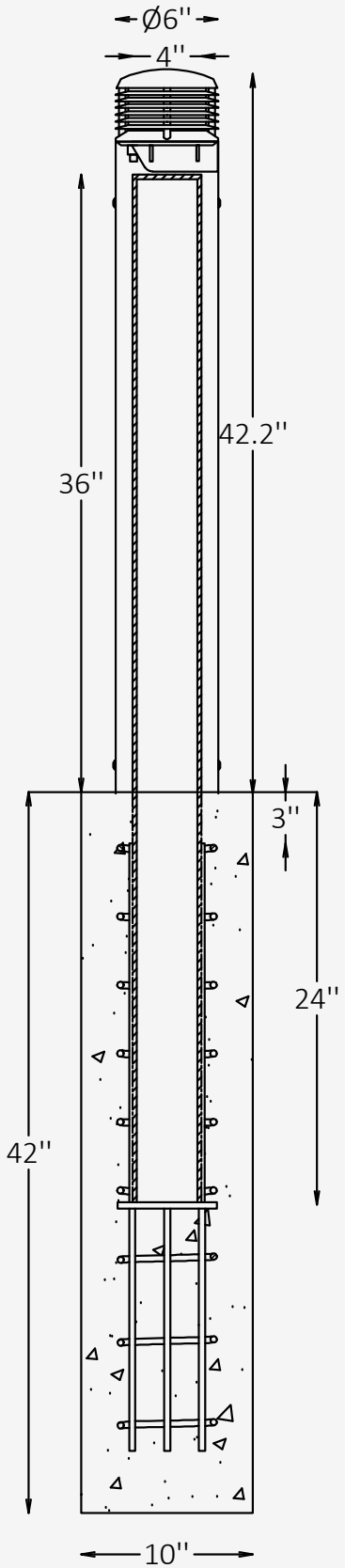

Crash Rating	ASTM F3016 S10 Crash Rated
Rating Details	Certified to meet ASTM F3016. Tested and proven to stop a 5,000 lb vehicle up to 10 mph.
Minimum qty	Bollards must be installed in a minimum array of three (3) units to achieve the specified crash rating. A single bollard alone does not meet the tested standard.

MINIMUM GROUND CONDITIONS REQUIRED PER ASTM F3016

1a: The concrete is 3000 psi minimum unconfined compressive strength, with one layer of #3 (Ø3/8″) rebar spaced at 12″ each way, with 1-1/4″ cover at bottom. Rebar not shown here.

1b: The base is Type A Grade 1 crushed limestone road base, compacted to 90% of standard proctor density.

1c: The washed sand shall be classified as SP - poorly graded sand & be compacted to a density of not less than 90% maximum dry density

KITTED SYSTEM

We provide everything but the concrete – core, cover, rebar cage and hardware are all included.

EASY TO INSTALL

CrashCore Bollards have a simple core drilled installation — so simple you can install one in less than an hour.

A WE LIGHTING
Designed by we, Customized for you

Project

Notes

Crash-Tested S20 Bollard Mounting Details

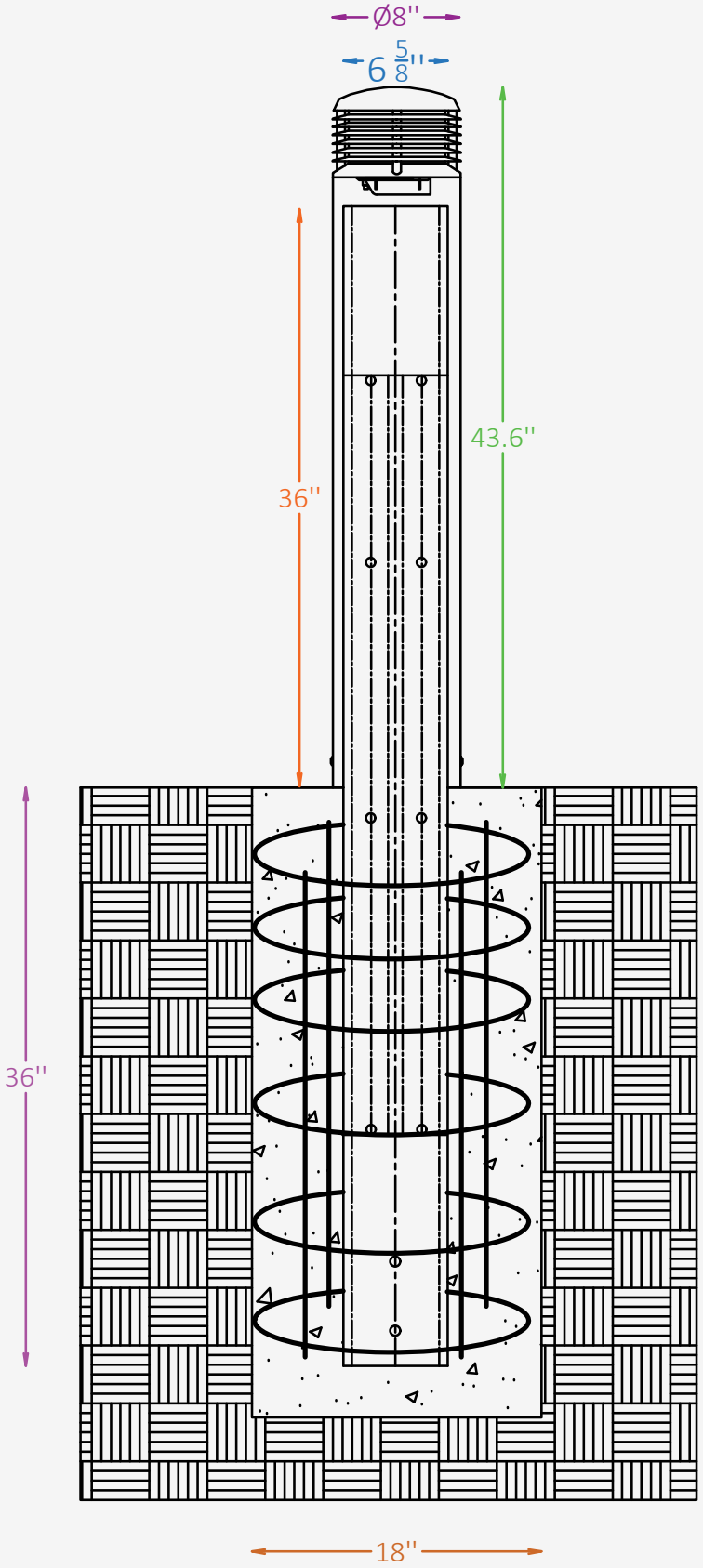

Crash Rating	ASTM F3016-19 S20 P1 Crash Rated
Rating Details	Rated in accordance with ASTM F3016-19 S20 P1. Designed to stop a 5,000 lb vehicle traveling at 20 mph, with a P1 penetration rating.
Minimum qty	A minimum of one (1) bollard is required to achieve the specified crash rating when installed according to the approved installation requirements.

MINIMUM GROUND CONDITIONS REQUIRED PER ASTM F3016

1a: Concrete Footing
Minimum 5,000 PSI reinforced concrete footing, 18” diameter × 36” deep.

1b: Reinforcement
16” × 30” rebar cage with #3 rebar, six horizontal turns, and four vertical bars. Double reinforcement at the top and bottom turns.

1c: Ground Conditions
Installation in compacted earth with a reinforced concrete footing.

CORE-DRILLED SYSTEM

Designed for core-drilled installation with an 18” diameter footing and 36” embedment depth. The bollard extends 36” above finished grade.

EASY TO INSTALL

Core-drilled installation with reinforced concrete footing. Position the bollard vertically, secure the reinforcement, and pour minimum 5,000 PSI concrete according to the approved installation drawings.

A WE LIGHTING
Designed by we, Customized for you

Project

Notes

Crash-Tested C40 Bollard Mounting Details

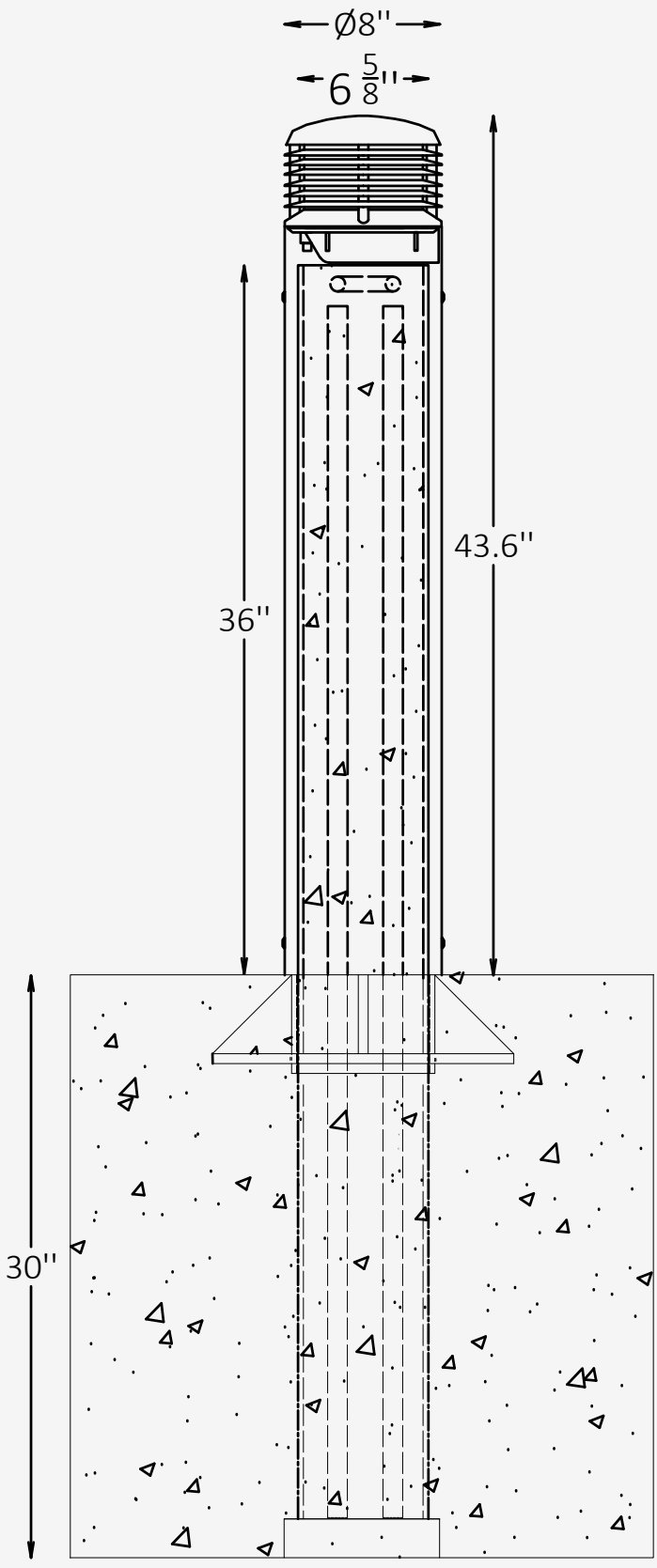

Crash Rating	ASTM F2656 C40, P1 Crash Rated
Rating Details	Certified to meet F2656-07 standards. Capable of halting a 2,342 lb. vehicle traveling at 40 mph.
Minimum qty	Bollards must be installed in a minimum array of three (3) units to achieve the specified crash rating. A single bollard alone does not meet the tested standard.

MINIMUM GROUND CONDITIONS REQUIRED PER ASTM F2656-07

1a: The concrete shall be 4000 psi minimum unconfined compressive strength, poured to a 30″ depth. Each bollard is factory-filled with concrete and includes two pre-cut vertical rebars (installer-supplied) placed inside the bollard tube

1b: Masonry blocks or rebar chairs shall be used to elevate the bollard steel off of the subgrade, ensuring proper concrete coverage below the tube. The base is prefabricated and delivered as a single unit, requiring no field welding, bolting, or assembly.

1c: The system supports unrestricted spacing between bollards and is suitable for sloped or curved installations without modification. Symmetrical bollard design ensures uniform impact resistance from any direction

BOLLARD SPACING

We provide everything but the concrete – core, cover, rebar cage and hardware are all included.

EASY TO INSTALL

Easy and quick installation; excavate set bollard and pour concrete

A WE LIGHTING
Designed by we, Customized for you

Project

Notes

Crash-Tested M30 Bollard Mounting Details

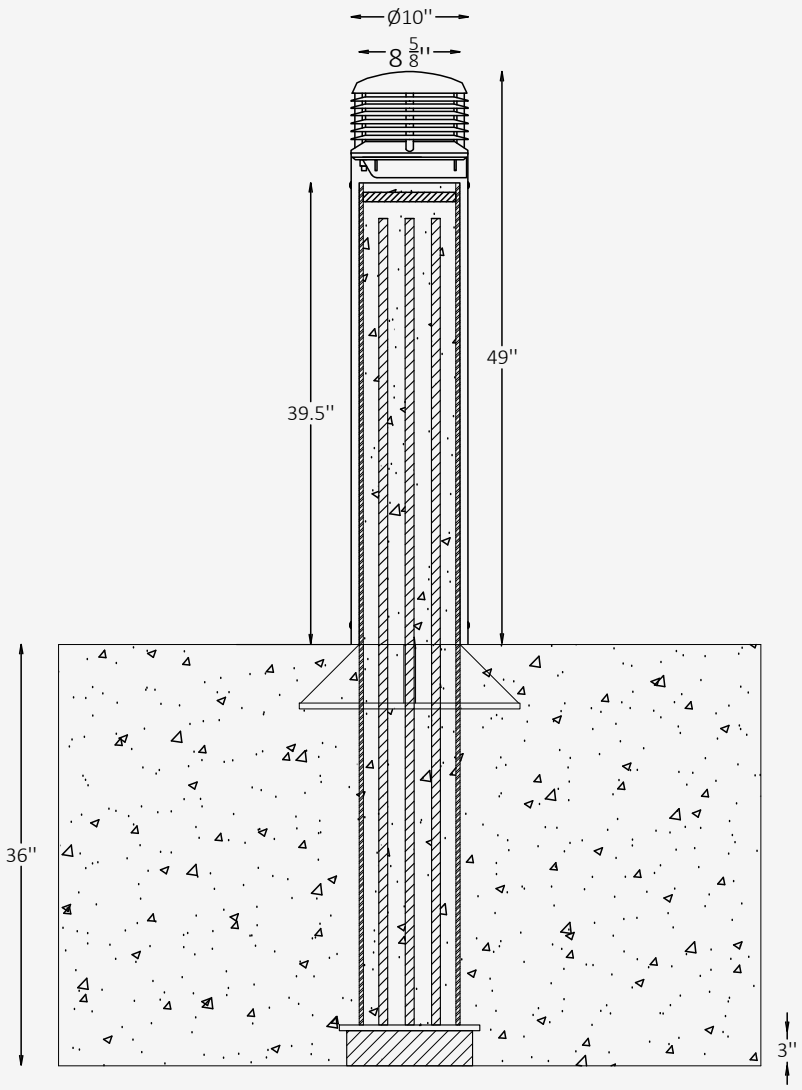

Crash Rating	ASTM F2656-07 - M30/P1 Crash Rated
Rating Details	Certified to meet F2656-07 standards. Stops 15,000 lb. vehicle traveling at 30 mph
Minimum qty	Bollards must be installed in a minimum array of three (3) units to achieve the specified crash rating. A single bollard alone does not meet the tested standard.

MINIMUM GROUND CONDITIONS REQUIRED PER ASTM F2656-07

1a: 1a: The concrete shall be 4000 psi minimum unconfined compressive strength, poured to a depth of 36". Each bollard tube is filled to the top with concrete and contains six (6) vertical #6 rebars (68" long), inserted inside the steel pipe .

1b: A 12" x 12" x ½" steel base plate is welded to the bottom of the bollard tube. The bollard must be elevated 3" off subgrade using masonry blocks or rebar chairs, ensuring proper embedment of the foundation and alignment with the concrete surface.

1c: The system is prefabricated and designed for "set and pour" installation with no rebar required in the foundation itself. Standard spacing between bollards is 60" on center, with a 51-3/8" clear span, although modifications are allowed for site-specific conditions

BOLLARD SPACING

Recommended 60 inches (1524 mm) maximum on-center (o/c) spacing.

EASY TO INSTALL

The set & pour method simplifies the entire installation process. With no rebar being required, install time and cost is reduced by nearly 50%.

A WE LIGHTING
Designed by we, Customized for you

Project

Notes

Crash-Tested M30 Shallow Mount Bollard Mounting Details

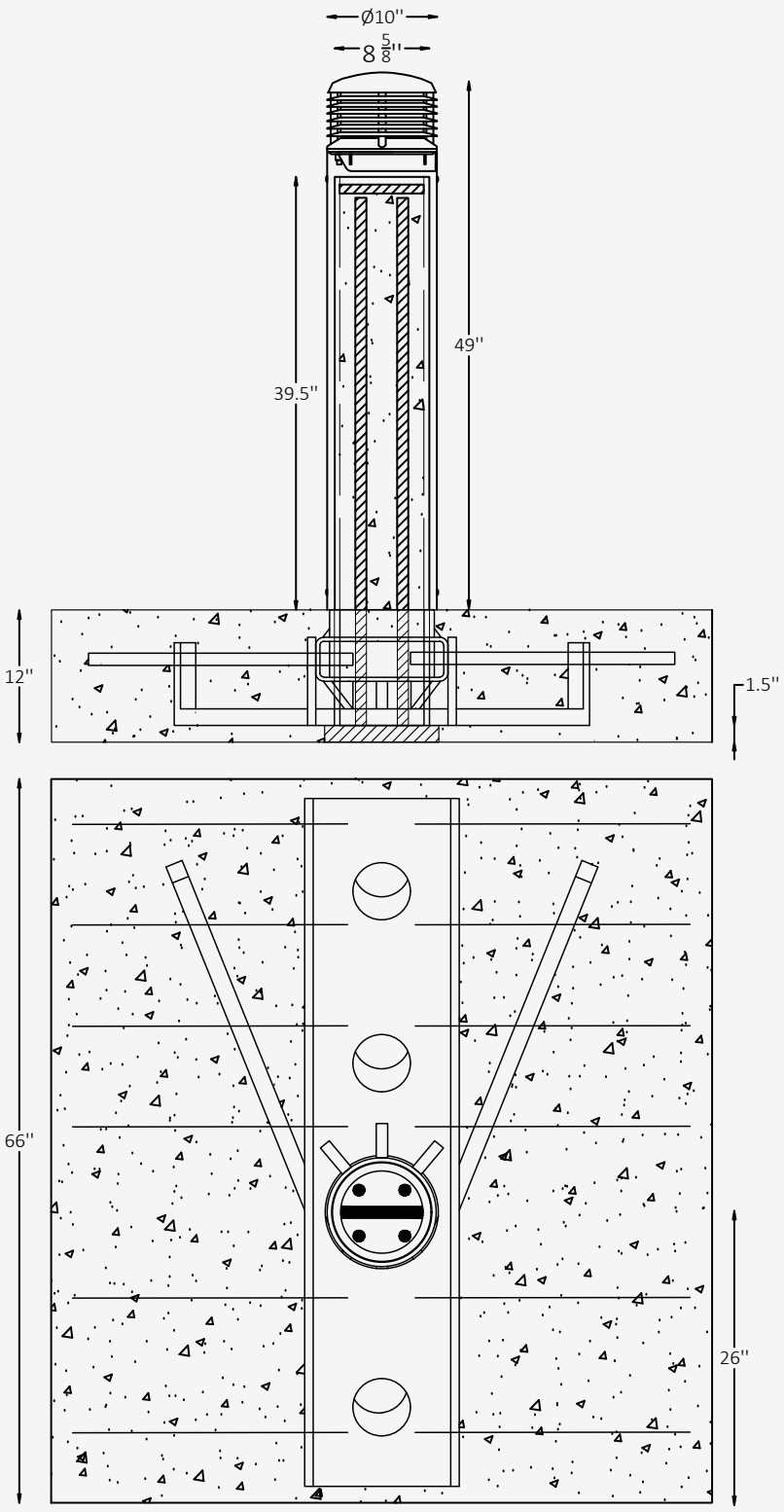

Crash Rating	ASTM F2656-07 - M30/P1 Crash Rated
Rating Details	Certified to meet F2656-07 standards. Capable of halting a 2,342 lb. vehicle traveling at 40 mph.
Minimum qty	Bollards must be installed in a minimum array of three (3) units to achieve the specified crash rating. A single bollard alone does not meet the tested standard.

MINIMUM GROUND CONDITIONS REQUIRED PER ASTM F2656-07

1a: The foundation shall consist of 3000 psi concrete, poured to a depth of 12", compacted over a properly tamped subgrade. The bollard tube is filled to the top with concrete and reinforced with four (4) vertical #8 rebars, each 48" long (provided by manufacturer)

1b:A 9-5/8" Schedule 40 steel collar surrounds an 8-5/8" Schedule 120 steel bollard pipe. The bollard is supported on 1-1/2" masonry blocks or chairs to elevate it above the subgrade, ensuring the top of the collar aligns with the finished concrete grade.

1c: The shallow mount system includes six (6) #5 horizontal rebars per bollard, each inserted 3" into pre-drilled holes in the adjacent bollard pipes for lateral reinforcement. Standard spacing is 54" on center, with a clear span of 45-3/8", although modified layouts are available for site-specific conditions

BOLLARD SPACING

Recommended 60 inches (1524 mm) maximum on-center (o/c) spacing.

SHALLOW FOUNDATION

With a shallow foundation of only 12" deep, our system avoids potential conflicts with underground utilities.

A WE LIGHTING
Designed by we, Customized for you

Project

Notes

Crash-Tested M50 Bollard Mounting Details

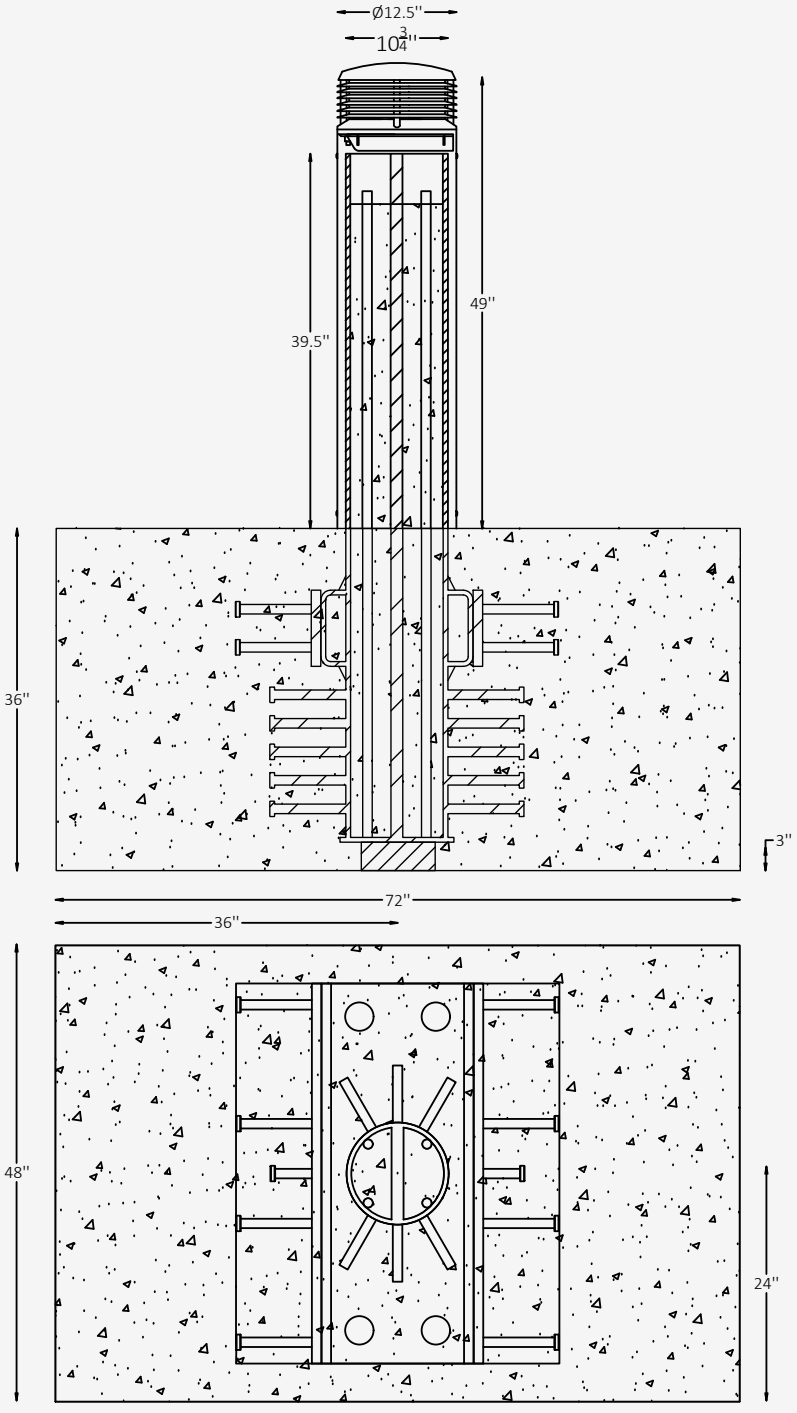

Crash Rating	ASTM F2656 M50-P2 Crash Rated
Rating Details	Certified to meet F2656 standards. Stops 15,000 lb. vehicle traveling at 50 mph
Minimum qty	Bollards must be installed in a minimum array of three (3) units to achieve the specified crash rating. A single bollard alone does not meet the tested standard.

MINIMUM GROUND CONDITIONS REQUIRED PER ASTM F2656

1a: The foundation shall be poured using 4000 psi minimum compressive strength concrete, to a depth of 36″ (914 mm). Each bollard is filled to the top with concrete and reinforced with four (4) #8 rebars (60 ksi), each 68″ long, pre-inserted into the steel

1b: A 10-3/4″ diameter Schedule 40 steel pipe is welded to a base and includes no field-assembly components. The bollard is factory-preassembled, requiring no bolting, tying, or installation beyond placement and concrete pour. It is supported on 3″ masonry blocks or chairs to elevate it above subgrade for full encapsulation .

1c: Standard embedment depth is 33″ (838 mm) below grade, with 39-1/2″ (1003 mm) above grade. Typical center-to-center spacing is 60″, with the system capable of achieving M50-P1 rating in a three-bollard array. A single bollard provides M50-P2 rating, stopping a 15,000 lb vehicle at 50 mph

BOLLARD SPACING

Recommended 60 inches (1524 mm) maximum on-center (o/c) spacing.

EASY TO INSTALL

No bolting, tying, or assembly is required for the bases - prefabricated units drop into standard excavations without specialty subgrade.