sonnen

Engineering Design Tech Specs

sonnenHome Battery 11

The sonnenHome Battery 11 is a AC coupled battery energy storage system for indoor and outdoor applications. The sleek design combines smart energy management with safe and long-lasting batteries to efficiently manage solar energy usage throughout the day, store excess solar power for use at night and provide reliable backup power during planned and unplanned power outages.

System (AC)

Battery configurations	Small cabinet	Large cabinet
Usable capacity	10 kWh	10 / 20 kWh
Total weight	375 lbs (170 kg)	up to 552 lbs (250 kg)
Dimensions W" / H" / D"	26 / 46.5 / 12 in (665 / 1,180 / 305 mm)	26 / 65 / 12 in (665 / 1,650 / 305 mm)
Grid integration	AC coupled	
Environment	Indoor / Outdoor	
Operating temperature[1]	-4 °F - 122 °F (-20 °C - 50 °C)	
Nominal frequency	60 Hz	
Nominal power[2]	6,000 W	
Max. inverter efficiency	95.4 %	
Max. Round-trip efficiency	86.02 %	
On-grid pass through	35 A	
Max. continuous AC current during grid-tied	25 A	
Max. continuous AC current during backup	25 A	
AC Metering[3]	Revenue Grade Certified (+/- 0.5 %)	
Applications	Solar self-consumption, VPP, Emergency backup power, Time-of-use	

Off-grid (AC)

Max. AC power during backup (continuous)	6 kW
Max. AC power during backup (30 min)	7.2 kW
Max. AC power during backup (5 s)	8.64 kW
Max. AC power during backup (450 ms)	12 kW

General

System cooling	Forced air
Communication ports	Ethernet
Communication protocols / Control	API available to select partners
Nominal AC voltage	120 V L-N | 240 V L-L
Seismic rating	IEEE 693
Noise emission	< 40 dB (A)
Maximum operation altitude	2000 m (6560 ft) above sea level
Maximum supported AC power from PV per sonnen system	6 kW

Dimensions[4]

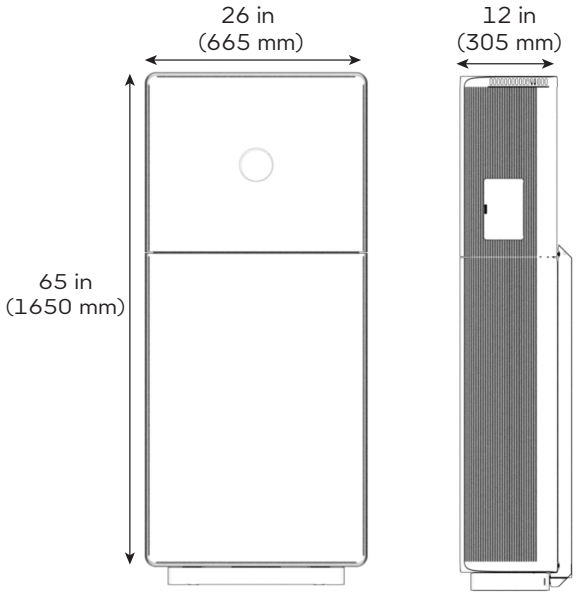

Battery (DC)

Nominal DC voltage	102.4 V
DC battery input voltage	96 - 114 V per module
Maximum DC charge current	40 A per module
Cell discharge[5]	5 kWh with 100% DOD
Cell chemistry	Lithium iron phosphate (LiFePO4)
Over-current protection	Fuse protection

Compliance information

Certifications	UL 9540, UL 1741, UL 1973, UL 9540A, UN 38.3
Grid code	UL 1741 SA, UL 1741 SB, UL 1741 CRD PCS, IEEE 1547, IEEE 1547.1, IEEE 2030.5
Emissions	FCC Part 15 Class B
Immunity	IEC 61000-4-2/3/4/5/6/8
Warranty[6]	10 year or 10,000 cycle system warranty – includes inverter, battery modules, cabinet and components
Degree of protection / Enclosure type rating	Nema Type 3R

Design Considerations

Detailed round-trip efficiency range[7]

Round-trip efficiency of the entire sonnen system varies depending on charge/discharge power levels with an expected efficiency range shown in the digram.

The “Symmetric” curve within the range shows the efficiency when charge and discharge rates are equal. The upper and lower limits indicate the operating region of the system based on variations of those charging and discharging rates.

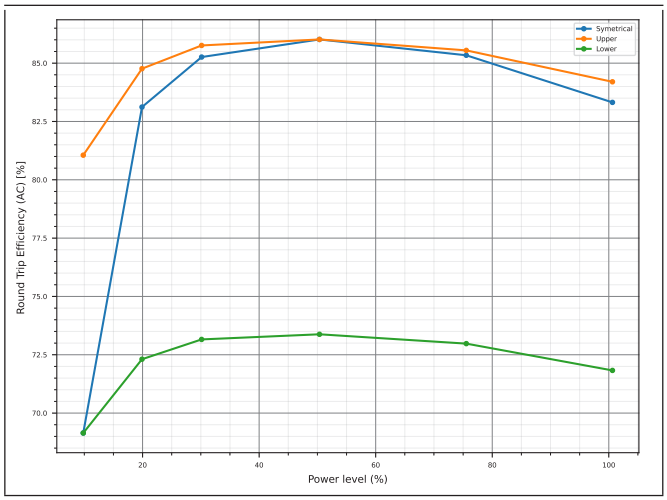

Single Line Diagram for System Design

Below is an overview of the design layout for a single sonnenHome Battery 11 with a protected loads panel for backup power. Specific project design consultation for custom installations is available through sonnen Applications Engineering at design@sonnen-batterie.com.

Notes:

1. Service meter
2. Main Service Panel
3. sonnenHome Battery 11
4. Protected Loads Panel
5. Optional PV inverter

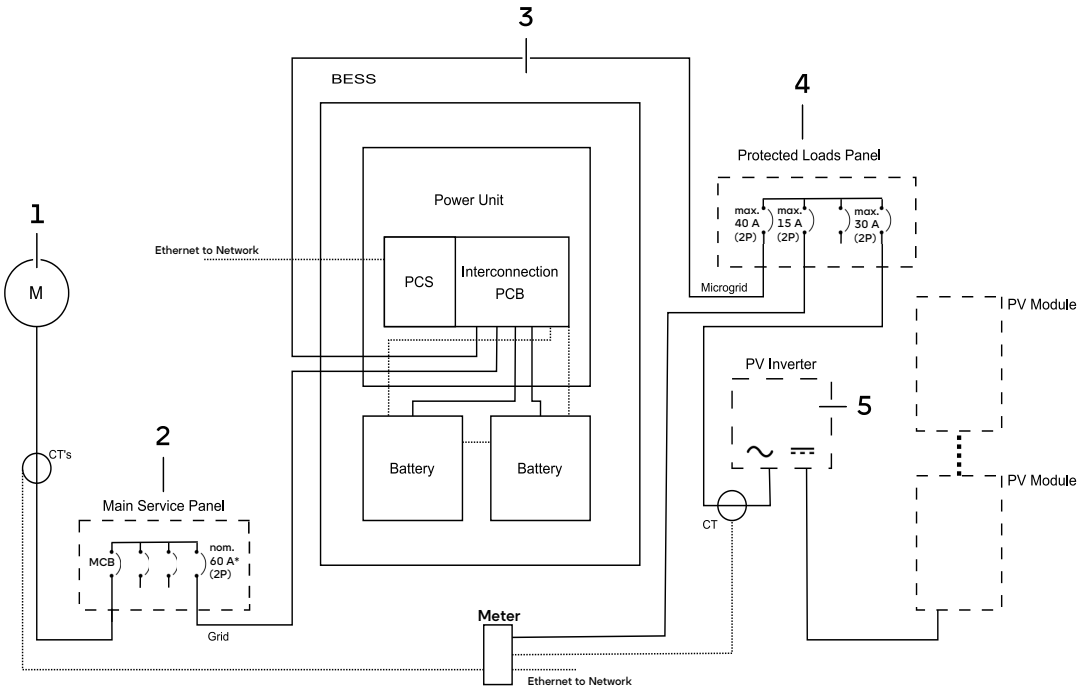

*40 A (2P) or 50 A (2P) circuit breaker acceptable with BESS dynamic PCS control activated | max. 75 A (2P) circuit breaker rating

[1] 41 °F - 95 °F (5 °C to 35 °C) (MAX power).
[2] When power factor cos phi = 1.
[3] According to ANSI C12.1.
[4] Dimensions of the large battery cabinet; the small battery cabinet is 46.5 in (1,180 mm) high.
[5] The sM4 battery modules are 5.5kWh in nominal capacity and represent 5kWh of usable capacity per module.
[6] Please observe our applicable warranty conditions.
[7] Based on full system AC/AC RTE “round-trip efficiency” at ambient temperature of 25 °C (77 °F), beginning of life in off grid mode. Test conducted by sonnen Inc. R&D. Backup data available.

We reserve the right to make technical changes. The values, outputs, other technical data, images, and diagrams in this prospectus and in data sheets, advertisements, and other promotional documents are approximate guidelines in all cases where they have not been identified as binding.

sonnen Inc.
1578 Litton Dr,
Stone Mountain, GA 30083
(310) 853-2404

KD: 925 P/N: 5501117 Rev: 01