scully

Scully Two-Wire Optic Sensor

Liquid Level Sensor for Tank Truck Overfill Prevention

Featuring Dynacheck® – Automatic and Continuous Self-Checking Circuitry

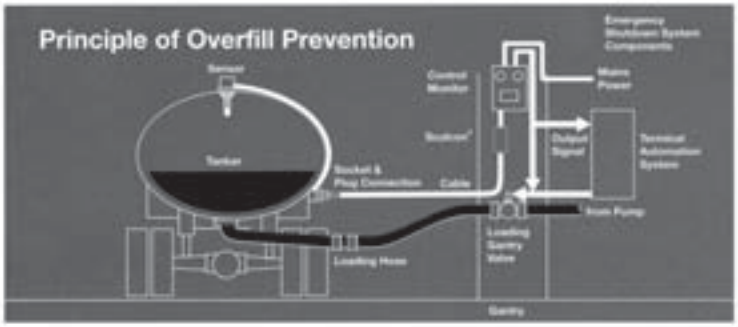

Scully Two-Wire Instant-On™ Optic Sensors are part of an automatic and continuous self-checking system you can count on. Scully two-wire optic sensors offer all these advantages:

- Maximum safety with Dynacheck® – automatic and continuous self-checking circuitry when used with Scully loading rack controls and vehicle onboard monitors
- Solid state construction employing state-of-the-art components and technology
- Scully's field proven electro optics technology
- Wide temperature range
- Employs shaft that is easy to cut when shorter length is needed
- Adjustable sensing level
- Instant-On™ – Instant permissive signal – no warmup time required
- Quick purging of liquid – instant re-permit as product level drops below the sensing point
- Fully compatible with all Scully thermistor controllers
- FM & CSA approvals for Class I, Division 1, Groups C & D hazardous locations
- Meets requirements of API Recommended Practice RP-1004

Description

Scully two-wire optic sensors are designed for liquid petroleum product overfill prevention and point level detection. They are designed to be used with the Scully Intellitrol®, Biclops®, and ST-15 series gantry control monitors, and are also used with Scully IntelliCheck® Monitor. There is no waiting for the control monitors' permit light to go on because the sensor requires no warm up time. They can be used for overfill prevention on rail cars and storage tanks.

Safety Features

The two-wire optic sensor incorporates Scully's unique and exclusive Dynacheck® circuitry when connected to Scully monitoring equipment. To ensure that the system will always detect an overfill condition, the controller uses pulsed signals which continuously check the entire system operation, including sensors, wiring, connectors and itself. If a sensor comes in contact with liquid, or in the unlikely event of a system fault, the pulsed signals cease and the controller automatically signals for immediate shutdown of the loading operation. No operator involvement is needed! Shutdown is accomplished by controlling pumps or valves.

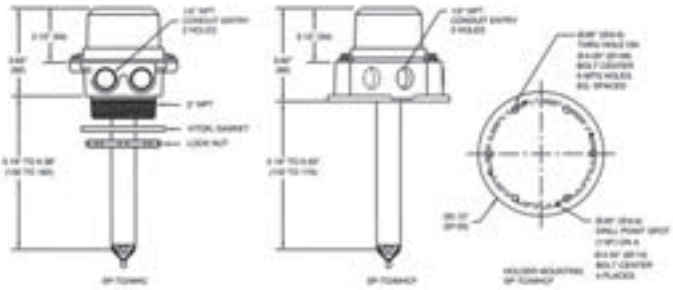

Technical Specifications

Operating Temperature Range
-40° F to +140° F (-40° C to +60° C)

Product Range
Gasoline blends and light fuel oils

Exposed Materials
Aluminum, zinc, borosilicate (Pyrex®) glass, epoxy, conductive nylon and Viton® seals

Detection Level and Size
The detection level is adjustable. Refer to sensor outline drawing above, shown for 7" shaft length.

Level Repeatability
±1/16" (1 mm)

Electrical Leads
18" (45 cm) long, 18 AWG (0.82 mm²)

Cable Entry
Two holes, 1/2" NPT threads.

Approvals
The sensor is intrinsically safe for mounting in Class I, Division 1, Groups C & D Hazardous location in accordance with Scully Control unit approval ratings

Ordering Information

Model	Description	Shaft Length	Part Number
SP-TO/MHC	Two-wire optic sensor, 2" NPT holder, 2-1/8" standard cap	7" (175mm)	09408
		12" (300mm)	09413
		15" (375mm)	09416
SP-TO/MHCF	Two-wire optic sensor, flanged holder, 35mm standard cap	7" (300mm)	09407
		12" (300mm)	09212
		15" (375mm)	09415
SD-5C	5-Element Electronic Dummy *Employed on tank trucks with less than 6 compartments (ill in Canada) when not using IntelliCheck monitor*		08298

Replacement Parts

Model	Description	Shaft Length	Part Number
SP-TO	Two-wire optic sensor (without holder)	7" (175mm)	09409
		12" (300mm)	09414
		15" (375mm)	09417
	Shaft O-ring		08577
SP-MHC	2" NPT Threaded Holder Only		09065
SP-MHCF	Flanged Holder only		08265
	Mounting Gasket for SP-MHC Holder		20893
	Mounting Lock Nut for SP-MHC Holder		57044
	Mounting Gasket for SP-MHC Holder		21451
	Cap O-ring		20766
	Short Cap (SC), height 1.38" (35mm)		21583
	Medium (Standard) Cap (MC), height 2.13" (54mm)		20888
	Cap screw		50652
	Cap screw spring washer		51122

Biclops, Dynacheck, Dynamic Self-Checking, Failsafe, Load Anywhere, IntelliCheck, Intellitrol, IntelliTank, Intelliview, Maxsafety, MuteCept, Soulcon, Soultrol, Scully, R.S.V.P., TABS and Scully V.I.P. are registered trademarks of Scully Signal Company.

Viton is a registered trademark of DuPont.

Specifications are subject to change without notice.

scully

scully

Scully Five-Wire Optic Sensor

Liquid Level Sensor for Tank Truck Overfill Prevention

Featuring Dynacheck® – Automatic and Continuous Self-Checking Circuitry

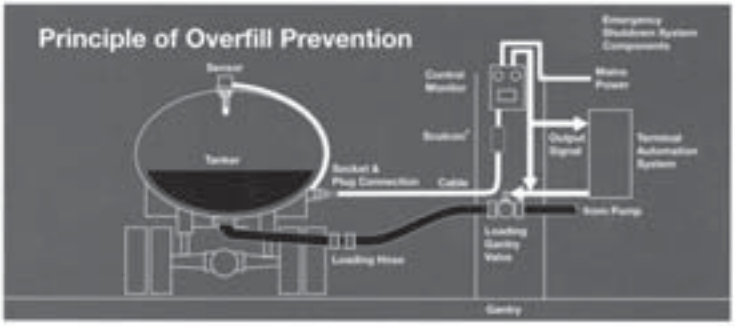

Scully Five-Wire Optic Sensors are part of an automatic and continuous self-checking system you can count on. Scully five-wire optic sensors offer all these advantages:

- Maximum safety with Dynacheck® – automatic and continuous self-checking circuitry when used with Scully loading rack controls and vehicle onboard monitors
- Solid state construction employing state-of-the-art components and technology
- Scully's field proven electro optics technology
- Wide temperature range
- Employs shaft that is easy to cut when shorter length is needed
- Adjustable sensing level
- Instant permissive signal – no warm-up time required
- Quick purging of liquid – instant re-permit as product level drops below the sensing point
- Fully compatible with all Scully optic controllers
- FM & CSA approvals for Class I, Division 1, Groups C & D hazardous locations
- Meets requirements of API Recommended Practice RP-1004

Description

Scully five-wire optic sensors are designed for liquid petroleum product overfill prevention and point level detection. They are designed to be used with Scully Intellitrol,® Biclops® and ST-35 series loading rack control monitors. There is no waiting for the control monitors' permit light to go on because the sensor requires no warm up time. The sensors can also be used with Scully Intellicheck® or Scully ONBOARD monitors.

Safety Features

The five-wire optic sensor incorporates Scully's unique and exclusive Dynacheck® circuitry when connected to Scully monitoring equipment. To ensure that the system will always detect an overfill condition, the controller uses pulsed signals which continuously check the entire system operation, including sensors, wiring, connectors and itself. If a sensor comes in contact with liquid, or in the unlikely event of a system fault, the pulsed signals cease and the controller automatically signals for immediate shutdown of the loading operation. No operator involvement is needed! Shutdown is accomplished by controlling pumps or valves.

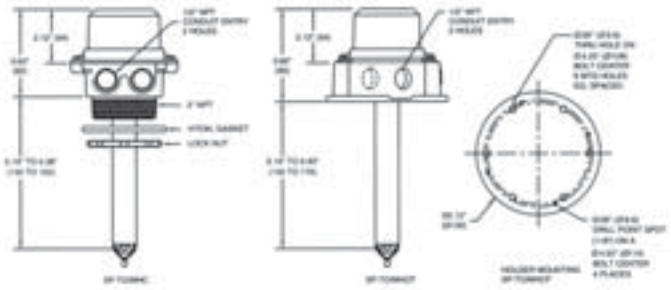

Technical Specifications

Operating Temperature Range
-40° F to +140° F (-40° C to +60° C)

Product Range
Gasoline blends and light fuel oils

Exposed Materials
Aluminum, zinc, borosilicate (Pyrex®) glass, epoxy, conductive nylon and Viton® seals

Detection Level and Size
The detection level is adjustable. Refer to sensor outline drawing above, shown for 7" shaft length.

Level Repeatability
±1/16" (1 mm)

Electrical Leads
18" (45 cm) long, 18 AWG (0.82 mm²)

Cable Entry
Two holes, 1/2" NPT threads

Approvals
The sensor is intrinsically safe for mounting in Class I, Division 1, Groups C & D Hazardous location in accordance with Scully Control unit approval ratings

Ordering Information

Model	Description	Shaft Length	Part Number
SP-FU/MHC	Five-wire optic sensor, 2" NPT holder, 2-1/8" standard cap	7" (175mm)	09208
		12" (300mm)	09213
		15" (375mm)	09216
SP-FU/MHCF	Five-wire optic sensor, flanged holder, 2-1/8" standard cap	7" (175mm)	09207
		12" (300mm)	09212

Replacement Parts

Model	Description		Part Number
SP-FU	Five-wire optic sensor (without holder)	7" (175mm)	09209
SP-FU		12" (300mm)	09214
SP-FU		15" (375mm)	09217
	Shaft O-ring		08577
SP-MHC	2" NPT Threaded Holder Only		09065
SP-MHCF	Flanged Holder Only		08265
	Mounting Gasket for SP-MHC Holder		20893
	Mounting Lock Nut for SP-MHC Holder		57044
	Mounting Gasket for SP-MHCF Holder		21451
	Cap O-ring		20766
	Short Cap (SC), height 1.38" (35mm)		21583
	Medium (Standard) Cap (MC), height 2.13" (54mm)		20888
	Cap screw		50652
	Cap screw spring washer		51122

Biclops, Dynacheck, Dynamic Self-Checking, Faylsafe, Load Anywhere, IntelliCheck, Intellitrol, IntelliTank, Intelliview, Maxsafety, MulteCept, Sculcon, Scultrol, Scully, R.S.V.P., TABS and Scully V.I.P. are registered trademarks of Scully Signal Company.

Viton is a registered trademark of DuPont.

Specifications are subject to change without notice.

scully

scully

Scully Load Anywhere® System

Complete Overfill Prevention Loading Rack Compatibility
Featuring Dynacheck® - Automatic and Continuous Self-Checking Circuitry

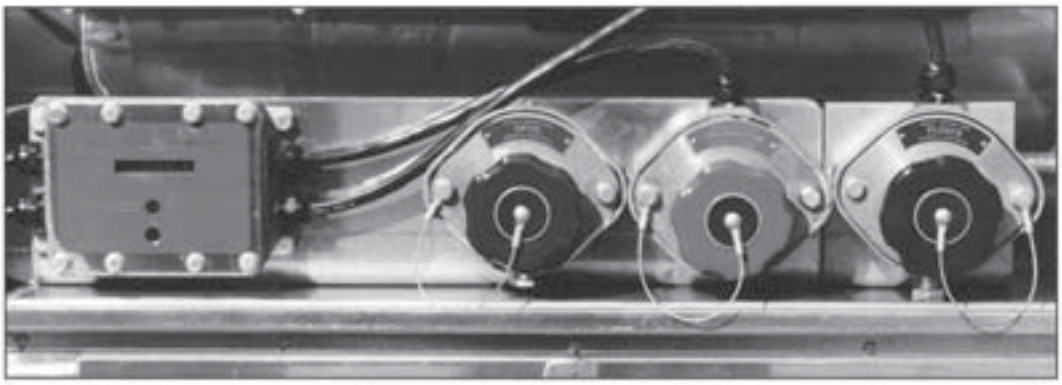

Scully truck mounted control monitor and sockets

The Scully Load Anywhere® Overfill Prevention System offers the maximum safety in tank truck loading operations. System components include the Scully Load Anywhere Control Monitor, Optic Sensors and Optic, Thermistor or Float Sockets. The Scully Load Anywhere System offers all these advantages:

- Complete compatibility with Scully Optic and Thermistor Rack Control Monitors - the #1 choice of over 90% of all bottom loading terminals in the United States.
- Dynacheck® - automatic and continuous self-checking circuitry for maximum safety through electronic monitoring.
- Over 30 years of field-proven performance making Scully the #1 choice worldwide.
- No manual checks are needed.
- Durable construction for long-lasting dependability.
- Optic sensors that defeat fogging.
- Resistance to a wide range of temperatures.
- Easy installation with step by step instructions.
- The best service in the business with toll-free trouble-shooting and maintenance assistance.
- A complete system with monitor, sensors, sockets and installation kit.

See our IntelliCheck® Brochure for the latest in Tank Truck Overfill Prevention and Retained Product Monitoring.

Setting New Standards In Safety

scully

Scully's Load Anywhere® Overfill Prevention System Offer

Complete Compatibility With Loading Racks

The Scully Load Anywhere System is designed to offer complete compatibility with all Scully loading rack overfill prevention controls. Whether the terminal uses optic, thermistor or even float rack controls, with the proper configuration, you can hook up and load. Scully's Load Anywhere System allows you to load anywhere!

Over 90% of all bottom loading terminals in the United States use Scully Overfill Prevention Rack Control Monitors. Now that's compatibility! It only makes sense to choose Scully for your tank truck equipment to be assured of maximum safety. Scully gives you total protection backed by over 60 years of experience in time-proven, field-tested liquid handling systems.

Dynacheck® - The Ultimate Safety Net

The Scully Load Anywhere System incorporates Dynacheck automatic and continuous self-testing circuitry. Dynacheck sends a pulsing signal throughout the entire system. All components including the controller sensors, wiring and connections are checked. If everything is working properly, the signal reports back to the controller that the system is in a "safe" condition. The entire system checks itself automatically an average of up to 30 times per second! If a sensor is wetted by product or there is an unlikely fault in the system circuitry, the signal reports back to the controller that the system is in an "unsafe" condition. The controller generates a shutdown signal and all pumps and valves are shut off, preventing a potentially hazardous spill.

No operator is needed! Only Scully offers you the confidence of Dynacheck. ***Don't settle for less!***

The System With A Brain

The Scully Load Anywhere Control Monitor is the "brain" of the Load Anywhere System. The control monitor translates permissive signals from the optic sensors to thermistor, optic and float compatible rack control signals. It also serves to pinpoint problems through the use of power and compartment indicators. There are three types of indicator lights on the unit. There is a power indicator, a permit indicator and individual compartment indicators. The new state of the art design has indicators which read right to left and is designed to prevent moisture build up.

scully

You The Ultimate In Safety With Unmatched Dependability

Load Anywhere Kit Ordering Information

Each Load Anywhere kit includes one control monitor, the number of optic sensors to match the number of vehicle compartments, 100' of special Scully cable, 16 cable fittings, one socket cleaner, 30 crimp-on wire connectors, a troubleshooting manual and a color wiring diagram. Sockets are not included in the Load Anywhere kit. Order sockets separately.

Description	Part #
1 Compartment Load Anywhere Kit	08328
2 Compartment Load Anywhere Kit	08307
3 Compartment Load Anywhere Kit	08308
4 Compartment Load Anywhere Kit	08305
5 Compartment Load Anywhere Kit	08306
6 Compartment Load Anywhere Kit	08311

Advanced Optic Sensing

Scully Optic Sensors are the sensing device through which Dynacheck detects the presence of liquid product in the truck compartment. The sensors are set at a predetermined high level. Optic technology insures no warm-up time and the ability to "see" liquid product. One sensor is mounted in each compartment. The optic probes are adjustable at the time of installation for a variety of sensing depths, and are fitted with a permanent protector. Scully Optic Sensors are extremely resistant to fogging and handle a wide variety of temperatures and liquid products. Refer to technical data sheet #60678 for more information.

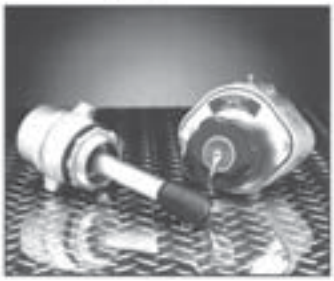

Durable, Reliable Connections

Scully Sockets are the vehicle mounted connectors for the rack plug. Sockets feature lightweight vinyl protective caps to prevent socket corrosion by protecting the contact pins from dirt and moisture. A captive cable attachment is also included to prevent loss. Sockets consist of durable construction to withstand the rigors of road travel. Refer to technical data sheet #60674 for more information.

Socket Ordering Information

Description (All sockets include the vinyl protective cap)	Socket Part #
SJ-6S Thermistor, API Standard	07720
SJ-6 Thermistor, J560 Pattern	07681

Above are compatible with the ST-6 and Biclops Rack Control Monitors

SJ-6SO Optic, Scully Pattern	07973
SJ-6W Optic, API Standard	07974
SJ-6X Optic, J560 Pattern	08199

Above are compatible with the ST-35 and Biclops Rack Control Monitors

SJ-F Float, Scully Pattern	07788
SJ-6F Float, J560 Pattern	08116

Above compatible with the Intellitrol™, ST-6, ST-35 and Biclops Rack Control Monitors with float switch adaptors

scully

Load Anywhere® System Replacement Parts

Description	Part #
Load Anywhere Control Monitor only	08687
Load Anywhere Control Module only	08563
Load Anywhere Retrofit Kit for Old Style Monitor, including New Module and Face Plate Assembly	08518
Load Anywhere 6 compartment cover assembly	08712
Optic sensor with holder, 7"	07894
Optic sensor only, 7"	21500
On/Off dashboard mounted, push-pull power control switch	58000
Complete installation kit with 100' Scully cable, 16 cable fittings, 30 crimp-on connectors, 1 on/off switch, 1/4 ampere in-line fuse and 1 socket cleaner	08309
Optic/Thermistor installation kit with 100' Scully Cable, 16 cable fittings, 30 crimp-on connectors	08399
100' of special Scully cable	22056
16 cable fittings	27555
30 crimp-on connectors	22255
Socket cleaner only	07811
Load Anywhere Installation and Service Video	08679
Optic sensor with holder, 12"	08698
Optic sensor only, 12"	08758

Socket Replacement Parts

Description	Part #
Housing for all socket models	21810
Blue Vinyl Cap, SJ-6W, SJ-6SO, SJ-6X Sockets	08575
Green Vinyl Cap, SJ-6S, SJ-6 Sockets	08574
Red Vinyl Cap, SJ-F, SJ-6F Sockets	08576
Contact assembly for SJ-6S socket	20757
Contact assembly for SJ-6SO & SJ-6W socket	21771
Contact assembly for SJ-F socket	21104
Contact assembly for SAE J560 sockets	27450
Housing gasket for all socket models	20628
Replacement single pin and screw for all sockets	07783
Socket cleaner for all sockets	07811
SJ-6W Style socket faceplate and label (less contact assembly)	08510
SJ-6F Style socket faceplate and label (less contact assembly)	08513
S6-6SO Style socket faceplate and label (less contact assembly)	08515
SJ-6, SJ-6S & SJ-8S Style socket faceplate and label (less contact assembly)	08516

System Tester Information: Scully manufactures 2 testers for the Load Anywhere System. The model HHC tester checks the probe section and input power of the Load Anywhere System, and the Universal Truck Tester checks for proper output signals from the control monitor. Refer to technical data sheets #67252 and #92794 for further information.

Approvals: Scully Load Anywhere Systems are approved for use in Class I, Division 2, Group D hazardous locations by Factory Mutual Research and the Canadian Standards association as part of an intrinsically safe system.

Disclaimer: The optimum safety system, taking full advantage of the exclusive Scully Dynamic Self-Checking feature Dynacheck and the FM approval, should be the Load Anywhere System connected to any truck terminal loading rack equipped with a Scully Loading Rack Monitor. Other manufacturers provide truck terminal loading rack equipment and tank truck systems which claim they are "interchangeable" and fully compatible with Scully equipment. Although these systems may allow you to load your trucks, they do not necessarily provide automatic and continuous self-checking of the system and equipment. Although we have designed our systems for the maximum compatibility, SCULLY CANNOT GUARANTEE THE SAFETY OF OUR SYSTEM WHEN IT IS USED IN CONJUNCTION WITH AN OVERFILL PREVENTION SYSTEM FROM ANOTHER MANUFACTURER. We stress that for maximum safety the total system should consist of Scully rack equipment connected to Scully truck equipment. Any system that is not such may violate Scully's warranty and the conditions of the FM approval.

Bickips, Dynacheck, Dynamic Self-Checking, Dynamic Self-Test, Faylsafe, IntelliCheck, IntelliTank, Intellitrol, Intelliview, Load Anywhere, Maxsafety, MulteCept, Scully, Sculcon, Sculltrol, Scul-Lock, Scul-Tel, Scul-Tite, TABS and V.I.P. are registered trademarks of Scully Signal Company.
Specifications are subject to change without notice.

scully

scully

INTELLICHECK®

Complete Overfill Prevention and Retained Product Monitoring System with Complete Loading Rack Compatibility.

Scully's IntelliCheck® System

is the most advanced secondary overfill protection and retained product monitoring system in tank truck loading operations. Featuring Dynacheck®- automatic and continuous self-checking circuitry, the controller, wiring, connections and sensors are checked for faults up to 30 times per second. Only IntelliCheck offers system diagnostics this extensive.

IntelliCheck is a state of the art point level detection system that provides:

- Overfill prevention and retained product monitoring in one compact enclosure.
- Scully Dynacheck, automatic and continuous self-checking circuitry.
- The ability to use existing Scully five-wire optic or Scully two-wire optic overfill sensors.
- Complete visual and diagnostic display of overfill sensors' status. Will not permit loading under any fault or wet overfill sensor condition.
- Monitoring of up to 8 compartments.
- Complete compatibility with all Scully loading rack overfill prevention equipment.
- Durable construction for long lasting dependability.
- Easy installation with step by step instructions.
- The best technical service in the industry, with 24-hour toll-free trouble-shooting and technical assistance.
- Full communication with diagnostic information on all sensor conditions and system functions shown and explained on the monitor cover.

STANDARD FEATURES

OVERFILL PREVENTION

- Monitoring of up to 8 compartments.
- Maximum safety with Dynacheck automatic and continuous self-checking circuitry.
- Red "wet" sensor LED indicators which illuminate on high level and signal output shutdown.

DYNACHECK® SAFETY

- Dynacheck uses pulsed signals to continuously check the entire system.
- The controller, wiring, connections and sensors are checked for faults up to 30 times per second.
- If a sensor comes in contact with liquid, or in the event of a system fault, the pulsed signals cease, and the controller automatically signals for immediate shutdown of the loading operation.

COMPLETE DIAGNOSTICS AND COMMUNICATION

- IntelliCheck shows visual indication of proper operation.
- Prominent red and green status LED indicators indicate permit, Dynacheck status, auxiliary control, signals from rack, and signals to rack.
- Individual wet sensor detection by compartment, with indication of open sensor wiring, shorted sensor wiring, sensor faults and even wiring faults or a faulty connection to the loading rack controller.

RETAINED PRODUCT MONITORING

- Automatic detection with two-wire optic retained product sensors.
- Monitoring of up to 8 compartments.
- Loading is automatically locked out when product remains in a compartment.
- Driver must acknowledge the presence of retained product.
- Warns against product mixing.

ADVANCED OPTIC SENSING

- Scully optic sensors are the devices through which Dynacheck detects the presence of liquid product.
- The signal for each sensor is directly wired to the IntelliCheck monitor for verification of each compartment's status.
- Optic technology insures no warm-up time.
- One overfill and/or one retained product sensor is mounted in each compartment.

DURABLE, RELIABLE SOCKET CONNECTIONS

- Scully sockets are the vehicle mounted connectors for the rack plug.
- Feature lightweight vinyl protective caps to prevent socket corrosion.
- Captive cable attachment to prevent loss.

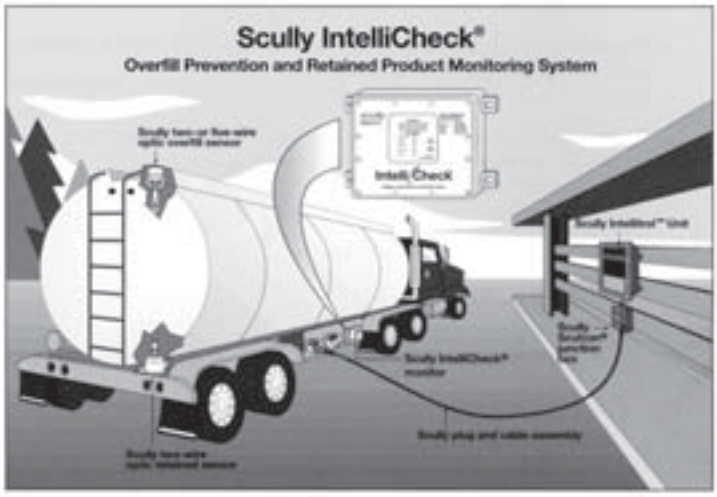

TECHNICAL SPECIFICATIONS

Status Indicators and Diagnostic Display:

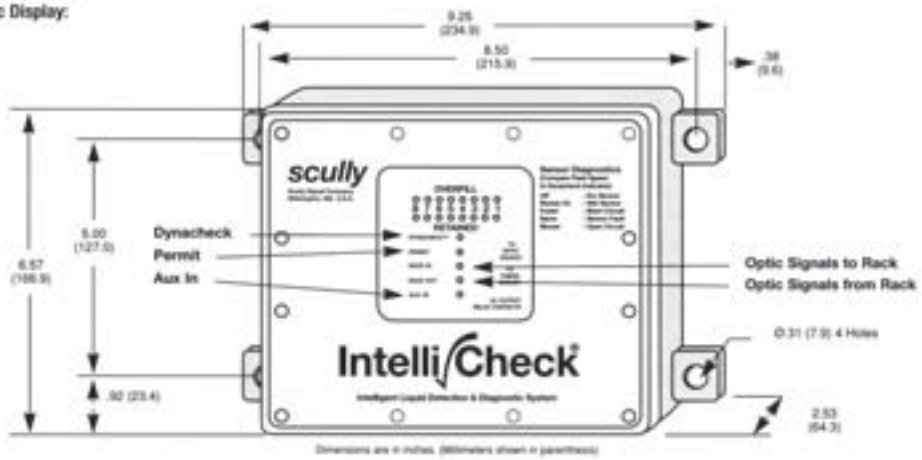

Overfill Sensor or Retained Sensor Indicators: The red overfill sensor or retained sensor indicator light conditions are as follows:

Red Light Off - sensor is operating normally. Condition exists when the green permit indicator is on and the Dynacheck indicator is flashing.

Red Light On (not flashing) - the sensor is immersed in product. Condition exists when the green permit indicator is off and the Dynacheck indicator is flashing. This situation could also indicate a faulty sensor.

Red Light is Flashing Slowly (as compared to the Dynacheck indicator) - the sensor return line connection is open. Condition exists when the green permit indicator is off and the Dynacheck indicator is flashing.

Red Light is Flashing at Medium Speed (equal to the Dynacheck indicator) the sensor circuitry is faulty. Condition exists when the green permit indicator is off and the Dynacheck indicator is flashing.

Red Light is Flashing Fast (as compared to the Dynacheck indicator) the sensor return line is shorted to ground or another return signal line. Condition exists when the green permit indicator is off and the Dynacheck indicator is flashing.

Permit: When this green indicator is on and all red sensor indicators are off, the IntelliCheck System is ready to receive input from the loading rack terminal equipment.

Dynacheck: When this green indicator is pulsing, the IntelliCheck module is functioning. The pulsed indication signifies the IntelliCheck System and its module are self-checking. Should the module indicate a faulty sensor, the Dynacheck indicator will continue to pulse and is used as a reference for the sensor indicators to determine fault mode.

Aux In: This red indicator gives status of ancillary switches or connections made to the IntelliCheck System to satisfy loading operation requirements, i.e. vapor interlock switches, brake interlock, etc.

Optic from Rack: This red indicator gives status of connection to thermistor or optic terminal loading rack controllers. The red indicator is off when connected to optic rack controllers indicating optic signal reception. The red indicator is off when connected to a thermistor rack controller indicating thermistor signal reception.

Optic to Rack: This red indicator gives status of connection to thermistor or optic terminal loading rack controllers. The red indicator is off when connected to optic rack controllers indicating optic signal output. The red indicator is off when connected to a thermistor rack controller indicating thermistor signal reception.

Temperature Range: Operating -40° to +140° F (-40° to +60° C)
Storage -50° to +185° F (-45° to +85° C)

Wiring Entry Holes: ½ NPT on FM/CSA models

Input Voltage: 11 - 28 VDC

Sensor Inputs: Overfill: Scully two-wire optic sensors (SP-TO) or Scully five-wire optic sensors (SP-FU)
Retained: Scully two-wire optic sensors (SP-IR)

Response Time: Less than ½ a second maximum after detection of wet sensor or fault condition.

Size: Refer to diagram

Weight: 6.5 lbs. (2.9 kg.)

ORDERING INFORMATION

IntelliCheck Kits

Each IntelliCheck Kit includes one control monitor, the number of optic sensors to match the number of vehicle compartments, 100 feet of Scully cable, 30 crimp-on connectors, 16 compression fittings, a ½ amp fuse and a socket cleaner.

IntelliCheck Overfill and Retained System Kit	Part # for 8" Standard Sensors	Part # for 12" Extended Length Sensors
1 Compartment Overfill/Retained Kit with a 2-wire optic sensor	08361	08971
2 Compartment Overfill/Retained Kit with 2-wire optic sensors	08362	08972
3 Compartment Overfill/Retained Kit with 2-wire optic sensors	08363	08973
4 Compartment Overfill/Retained Kit with 2-wire optic sensors	08364	08974
5 Compartment Overfill/Retained Kit with 2-wire optic sensors	08365	08975
6 Compartment Overfill/Retained Kit with 2-wire optic sensors	08366	08976
7 Compartment Overfill/Retained Kit with 2-wire optic sensors	08382	08977
8 Compartment Overfill/Retained Kit with 2-wire optic sensors	08383	08978

IntelliCheck Overfill Only System Kit	Part # for 8" Standard Sensors	Part # for 12" Extended Length Sensors
1 Compartment Kit with a 2-wire optic sensor	08251	08961
2 Compartment Kit with 2-wire optic sensors	08352	08962
3 Compartment Kit with 2-wire optic sensors	08353	08963
4 Compartment Kit with 2-wire optic sensors	08354	08964
5 Compartment Kit with 2-wire optic sensors	08355	08965
6 Compartment Kit with 2-wire optic sensors	08356	08966
7 Compartment Kit with 2-wire optic sensors	08357	08967
8 Compartment Kit with 2-wire optic sensors	08358	08968

Control Units	Part #
IntelliCheck Overfill Monitor	08832
IntelliCheck Overfill and Retained Monitor	08818
IntelliCheck Overfill Only Replacement Module	08842
IntelliCheck Overfill and Retained Replacement Module	08841
IntelliCheck Cover Gasket	31787
IntelliCheck Cover Plexi Glass	31789
IntelliCheck ½ amp Fuse	26310

ORDERING INFORMATION

Installation and System Accessories	Part #
Installation kit for an IntelliCheck overfill and retained system using five wire overfill sensors which includes 200' of 11 conductor color coded cable, 60 crimp-on connectors, 32 compression fittings and a power switch	08367
Installation kit for an IntelliCheck overfill and retained system using two wire overfill sensors which includes 200' of 7 conductor color coded cable, 60 crimp-on connectors, 32 compression fittings and a power switch	08372
Installation kit for an IntelliCheck overfill only system using five wire overfill sensors which includes 100' of 7 conductor color coded cable, 30 crimp-on connectors, 16 compression fittings	08371
Mounting adapter plate for retrofitting trailers with existing monitors	31856
IntelliCheck pup connecting kit	08358
IntelliCheck Installation Video for Five Wire overfill sensors, VHS format	08859
IntelliCheck Installation Video for Two Wire overfill sensors, VHS format	08860
IntelliCheck Manual (minimum order of ten)	61215

Sensors	Part #
Two Wire Standard Optic Sensor with holder, SP-TO/MHC	08501
Two Wire Standard Replacement Sensor, SP-TO	22389
Five Wire Standard Sensor with holder, SP-FU/MHC	07894
Five Wire Standard Replacement Sensor, SP-FU	21500
Retained product sensor, two-wire optic with shear section and weld coupling, SP-IR	08819
Retained product sensor, two-wire optic, extended length with shear section and weld coupling, 2¼", SP-IR	08956

Sockets (See tech data sheet #60674 for additional information)	Part #
SJ-6S Scully Style Thermistor Socket with 8 pins, 2 J Slots with housing	07720
SJ-8S Canadian Thermistor Socket with 10 pins, 2 J Slots with housing	07716
SJ-6SO Scully Style Optic Socket, 2 J Slots with housing	07973
SJ-6W WOGA Style Optic Socket, 3 J Slots with housing	07974
SJ-6X J560 Style Optic Socket with housing	08199

Call and place your order today!

System Tester Information
Scully manufacturers a Universal Truck Tester that checks all compartment sensors, the operation of the IntelliCheck overfill prevention system and the self-proving grounding system. Refer to technical data sheet #67252 for further information.

Approvals
The Scully IntelliCheck Systems are approved for use in Class I, Division I, Group D hazardous locations by Factory Mutual Research and the Canadian Standards Association as part of an intrinsically safe system.

Disclaimer
The optimum safety system, taking full advantage of the exclusive Dynacheck feature and the FM approval, should be the IntelliCheck System connected to any truck terminal loading rack equipped with a Scully Loading Rack Monitor. Other manufacturers provide truck terminal loading rack equipment and tank truck systems which claim they are "interchangeable" and fully compatible with Scully equipment. Although these systems may allow you to load your trucks, they do not necessarily provide automatic and continuous self-checking of the system and equipment. Although we have designed our systems for maximum compatibility, SCULLY CANNOT GUARANTEE THE SAFETY OF OUR SYSTEM WHEN IT IS USED IN CONJUNCTION WITH AN OVERFILL PREVENTION SYSTEM FROM ANOTHER MANUFACTURER. We stress that for maximum safety the total system should consist of Scully rack equipment connected to Scully truck equipment. Any system that is not as such may violate Scully's warranty and the conditions of the FM approval.

TECHNICAL SPECIFICATIONS

Status Indicators and Diagnostic Display:

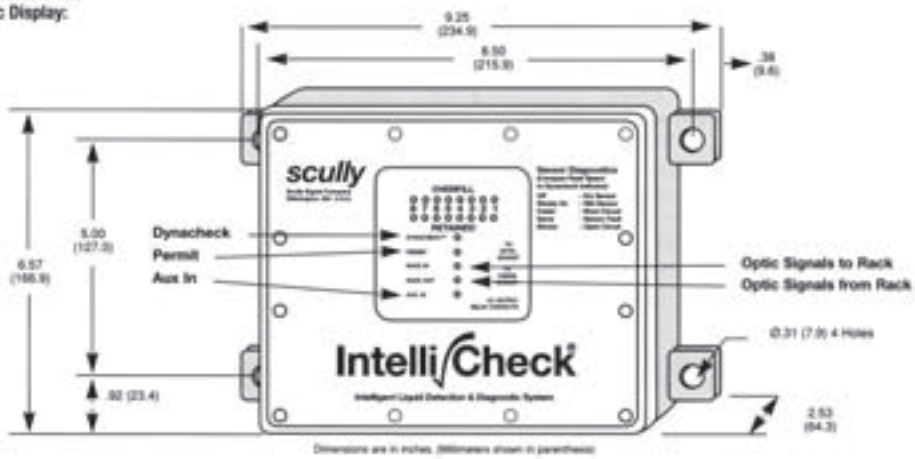

Overfill Sensor or Retained Sensor Indicators: The red overfill sensor or retained sensor indicator light conditions are as follows:

Red Light Off - sensor is operating normally. Condition exists when the green permit indicator is on and the Dynacheck indicator is flashing.

Red Light On (not flashing) - the sensor is immersed in product. Condition exists when the green permit indicator is off and the Dynacheck indicator is flashing. This situation could also indicate a faulty sensor.

Red Light is Flashing Slowly (as compared to the Dynacheck indicator) - the sensor return line connection is open. Condition exists when the green permit indicator is off and the Dynacheck indicator is flashing.

Red Light is Flashing at Medium Speed (equal to the Dynacheck indicator) the sensor circuitry is faulty. Condition exists when the green permit indicator is off and the Dynacheck indicator is flashing.

Red Light is Flashing Fast (as compared to the Dynacheck indicator) the sensor return line is shorted to ground or another return signal line. Condition exists when the green permit indicator is off and the Dynacheck indicator is flashing.

Permit: When this green indicator is on and all red sensor indicators are off, the IntelliCheck System is ready to receive input from the loading rack terminal equipment.

Dynacheck: When this green indicator is pulsing, the IntelliCheck module is functioning. The pulsed indication signifies the IntelliCheck System and its module are self-checking. Should the module indicate a faulty sensor, the Dynacheck indicator will continue to pulse and is used as a reference for the sensor indicators to determine fault mode.

Aux In: This red indicator gives status of ancillary switches or connections made to the IntelliCheck System to satisfy loading operation requirements, i.e. vapor interlock switches, brake interlock, etc.

Optic from Rack: This red indicator gives status of connection to thermistor or optic terminal loading rack controllers. The red indicator is off when connected to optic rack controllers indicating optic signal reception. The red indicator is off when connected to a thermistor rack controller indicating thermistor signal reception.

Optic to Rack: This red indicator gives status of connection to thermistor or optic terminal loading rack controllers. The red indicator is off when connected to optic rack controllers indicating optic signal output. The red indicator is off when connected to a thermistor rack controller indicating thermistor signal reception.

Temperature Range: Operating -40° to +140° F (-40° to +60° C)
Storage -50° to +185° F (-45° to +85° C)

Wiring Entry Holes: ½ NPT on FM/CSA models

Input Voltage: 11 - 28 VDC

Sensor Inputs: Overfill: Scully two-wire optic sensors (SP-TO) or Scully five-wire optic sensors (SP-FU)
Retained: Scully two-wire optic sensors (SP-IR)

Response Time: Less than ½ a second maximum after detection of wet sensor or fault condition.

Size: Refer to diagram

Weight: 6.5 lbs. (2.9 kg.)

scully

Bicleps, Dynacheck, Dynamic Self-Checking, Faylsafe, IntelliCheck, Intellitrol, IntelliTank, Intelliview, Load Anywhere, Maxsafety, Multecept, Sculcon, Scultrol, Scully, R.S.V.P., TAIS and V.I.P. are registered trademarks of Scully Signal Company.
Specifications are subject to change without notice.
© Printed in the USA, December 1997 GA67293

800-677-3711

Signal Hill, (L.A.) CA
(562) 490-0030 • Fax (562) 490-0091

West Sacramento, CA
(916) 371-1622 • Fax (916) 371-4792

Dallas/Fort Worth, TX
(817) 740-8077 • (817) 740-1332

Portland, OR
(503) 221-0335 • Fax (503) 221-0911

www.tankparts.com

scully

Scully T.I.M.™ - Truck Identification Module™

For Connection To The Vehicle Identification Prover® (V.I.P.®) System

Truck To Terminal Safety Communications

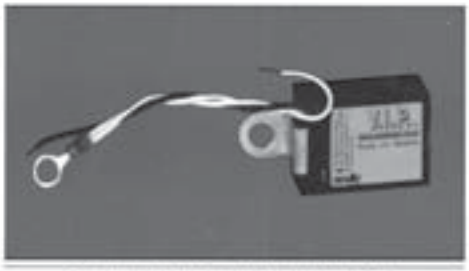

Truck Identification Module (T.I.M.)

T.I.M. Installed In Scully Overfill Prevention Socket

The Scully Truck Identification Module™ (T.I.M.™) provides a unique serial number to the Vehicle Identification Prover® (V.I.P.®) System control unit which allows the truck to communicate with the terminal during loading. The system is used in conjunction with your Scully tank truck overfill prevention and vehicle static grounding controls. The T.I.M. allows you to:

- Eliminate driver time to present vapor tightness certificates and other documentation required by the terminal each time you load.
- Use the existing plug and cable at the rack for a single connection to provide communication.
- Easily installed in your existing overfill prevention socket.
- Prepares the truck to supply information requested by the terminal in the future.

T.I.M. Description

The T.I.M. is basically an industrial computer chip which stores a unique serial number.

T.I.M. Installation

The T.I.M. is mounted within the overfill prevention socket housing. The T.I.M. is mounted using an existing socket mounting bolt. Both the T.I.M. mounting bracket and ground wire ring terminal are secured with this bolt. The violet colored wire is connected to pin number nine of the socket contact assembly. **After** wiring, the exposed silver jumper wire is cut to activate the T.I.M.. After activation, the T.I.M. will not operate if removed from the vehicle socket. However, an activated T.I.M. does not prevent replacement of the socket faceplate.

Registering the T.I.M. Serial Number

The T.I.M. serial number is read by terminal operators using a hand held computer with an attached adaptor plug. This plug is connected to the truck socket. The unique serial number is then entered into the Scully V.I.P. rack control unit through software via a terminal PC, loading controller or terminal automation system. Once registered, the serial number is read automatically each time you load.

System Operation

A tank truck enters the bay for loading and the driver attaches the loading rack overfill prevention plug to the socket. The serial number in the T.I.M. is read by the Scully V.I.P. control unit*. The number is checked for meeting vapor tightness certification and other requirements. The overfill sensors and grounding status are also verified at the same time by their corresponding rack controls. If all safety criteria is met, the truck is authorized to load.

Terminal managers at their discretion also have the ability to authorize loading of trucks not yet equipped with a T.I.M.. They also may provide a temporary bypass in the event of a system failure. This ensures that only certified trucks may obtain a load.

Setting New Standards In Safety

scully

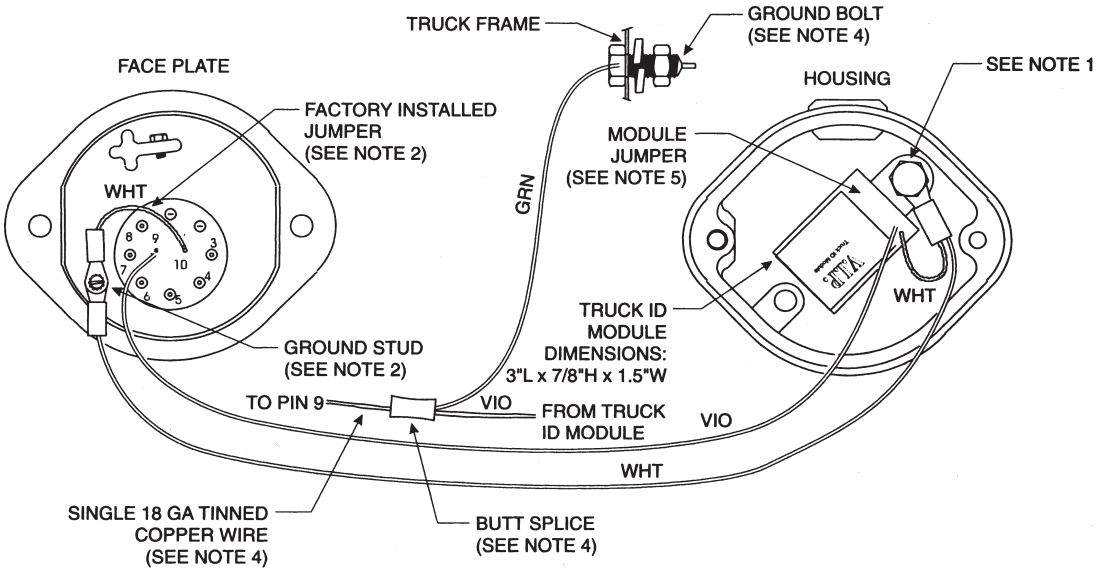

Installation Instruction Notes

1. Attach the T.I.M. inside the socket housing using one of the socket housing mounting bolts. The T.I.M. mounting tab and ground (white) wire ring lug are secured by the socket housing mounting bolt.
2. Connect the ground (white) lead to the ground stud on the socket face plate. Verify that the factory supplied jumper from pin 10 to the ground stud is in place.
3. Connect the violet lead to pin 9. If a jumper wire is installed between pin 9 and pin 10, it must be removed.
4. If a Scully ground bolt or ball is installed, connect the violet T.I.M. lead and green ground bolt lead together into one end of a butt splice connector. Connect a single 18 gauge tinned copper wire into the other end of the butt splice. Connect the free single 18 gauge tinned copper wire to pin 9. The connection barrel of pin 9 will not facilitate the two wires.
5. After attaching the T.I.M. to the housing and the wiring is completed, cut the T.I.M. jumper at the base to activate. The T.I.M. cannot be read until activated. See installation sheet #61248 for details.

Consult Scully for additional wiring information.

Technical Specifications

- Operates with all optic, thermistor and on-board overfill prevention systems.
- T.I.M. mounts within existing socket housing.
- Shared cable with the overfill and grounding systems.
- Compatible with present equipment and does not reduce its reliability.
- Epoxy encapsulated for reliability and ease of mounting.
- Operating temperature range of -40° to 140° F (-40° to 60° C).
- Approved for use in Class 1, Division II, Group D hazardous locations by Factory Mutual (FM).
- T.I.M. dimensions are shown on diagram.
- Supported by a two year warranty.

Ordering Information

Description	Part #
Truck Identification Module™ (T.I.M.™) for connection to V.I.P. System	08836

Biclops, Dynacheck, Dynamic Self-Checking, Dynamic Self-Test, Faylsafe, IntelliCheck, Intellitrol, Intelliview, Load Anywhere, Maxsafety, MulteCept, Scully, Scul-Tel, Scul-Tite, Scultrol, TABS and V.I.P. are registered trademarks of Scully Signal Company.
Truck Identification Module and T.I.M. are trademarks of Scully Signal Company. Protected under U.S. Patent Number 5,534,856.
Specifications are subject to change without notice.

scully

800-677-3711

Signal Hill, (L.A.) CA
(562) 490-0030 • Fax (562) 490-0091

West Sacramento, CA
(916) 371-1622 • Fax (916) 371-4792

Dallas/Fort Worth, TX
(817) 740-8077 • (817) 740-1332

Portland, OR
(503) 221-0335 • Fax (503) 221-0911

www.tankparts.com

scully

The Scully Ground Bolt & Ground Ball For the Scully Groundhog™

Vehicle Mounted Static Grounding devices For Tank Truck Grounding

Self-Proving For Maximum Safety and Performance

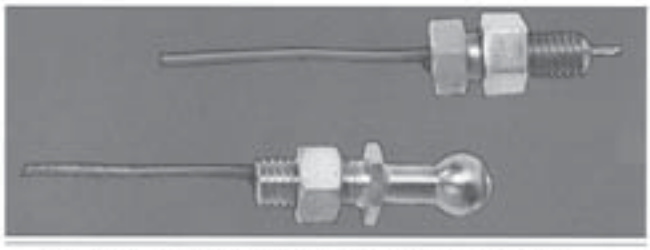

Scully Ground Bolt (top) and Scully Ground Ball (bottom)

The Scully Groundhog™ Vehicle Grounding System provides self-proving capabilities for maximum safety through electronic protection. Only the Scully Groundhog can offer you all these advantages for vehicle static grounding:

- Prevents Loading until a proper static ground has been established.
- Automatically shuts off the loading operation if the ground is broken at any time during loading.
- The Ground Ball and Bolt can be installed easily in a few minutes.
- Provides intelligent grounding verification with self-proving connections to the Ground Ball and Bolt.
- Self-proving feature provides visible proof that a proper vehicle static ground has been made and automatically permits loading.
- Suitable for tank cleaning and other applications where verifiable grounding is needed.
- Known for dependability, maximum safety and service common to all Scully Systems.

Description

The Scully Groundhog System insures your truck is at the same ground potential as the rack for safe loading conditions. Provisions are available where an earth tie-in is required.

If you load at terminals where the Scully Groundhog is incorporated with the existing Scully Overfill Prevention System, you need a Scully Ground Bolt on your vehicle. The Bolt is mounted directly to the vehicle frame and wired to the existing truck mounted Scully Socket(s). This allows you to perform only one connection for overfill and ground verification.

If you load at terminals which have a Scully Groundhog mounted independently at the rack, you need a Scully Ground Ball on your vehicle. The Ball mounts directly to the vehicle frame. The grounding connection is completed with a special quick release plug and cable assembly that plugs onto the ball.

The Scully Ground Bolt and Ball contain "smart" electronic circuitry which offers an intelligent return signal to the Groundhog Control Monitor. This "smart" circuitry must verify that a proper connection is made before loading can begin. If the ground connection is broken during loading operation, the operation ceases.

The Groundhog cannot be cheated like other grounding systems by attaching the clamp to the rack, putting a metal shim between jaws or jumping plug contacts.

Only the Scully Groundhog gives you a self-proving vehicle static grounding system this safe, this smart and this simple! With the Scully Groundhog, there's never a shadow of a doubt!

Setting New Standards In Safety

scully

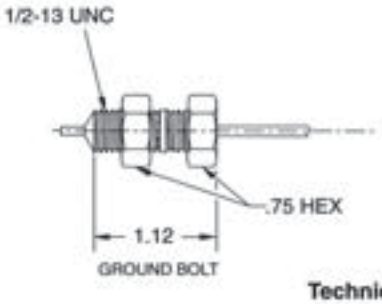

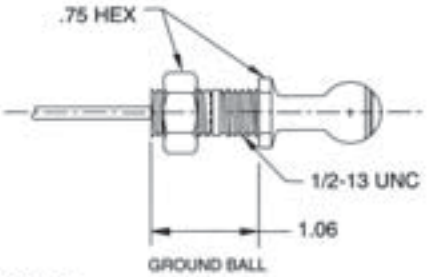

Technical Specifications

	Ground Bolt		Ground Ball
Material :	Stainless Steel, Stainless steel nut and lockwasher.	Material :	Stainless Steel, Stainless steel nut and lockwasher.
Thread Size:	1/2-13 UNC	Thread Size:	1/2-13 UNC
Pigtail Length:	72" long	Ring Lug:	1/4" through hole
Installation Torque:	125 inch pounds maximum	Pigtail Length:	12" long

Factory Mutual Research has approved both system options. The Canadian Standards Association has approved the independent system option. Consult the factory for specific details. The Groundhog™ System is patent protected in the United States and other countries by the Scully Signal Company.

Two Simple Options for Maximum Grounding Safety

With The Overfill Prevention Plug

With The Independent Groundhog™ Plug

Ordering Information

If you load where the Scully Groundhog is connected to the Scully Overfill Prevention Monitor, order the Scully Ground Bolt. If you load or Unload where the Scully Groundhog is an independent system using a separate Ground Ball plug and cable, order the Scully Ground Ball

Model	Description	Part#
Ground Bolt	Truck mounted electronic ground proving bolt for direct wiring to the Scully Overfill Prevention Socket (integrally wired system)	08560
Ground Ball	Truck mounted electronic ground proving ball for direct wiring to SC-47 ground plug (independent system)	08274

Biclops, Dynacheck, Dynamic Self-Checking, Dynamic Self-Test, Faytsafe, Intellicheck, Intellitrol, Intelliview, load Anywhere, Maxsafety, MulteCept,Scully, Scultrol, Scul-Lock, Scul-Tel, Scul-Tite, TABS and V.I.P. are registered trademarks of the Scully Signal Company

Specifications are subject to change without notice

scully

Scully Sockets

Truck Mounted Overfill Prevention System Connectors

Featuring Complete Loading Rack Compatibility

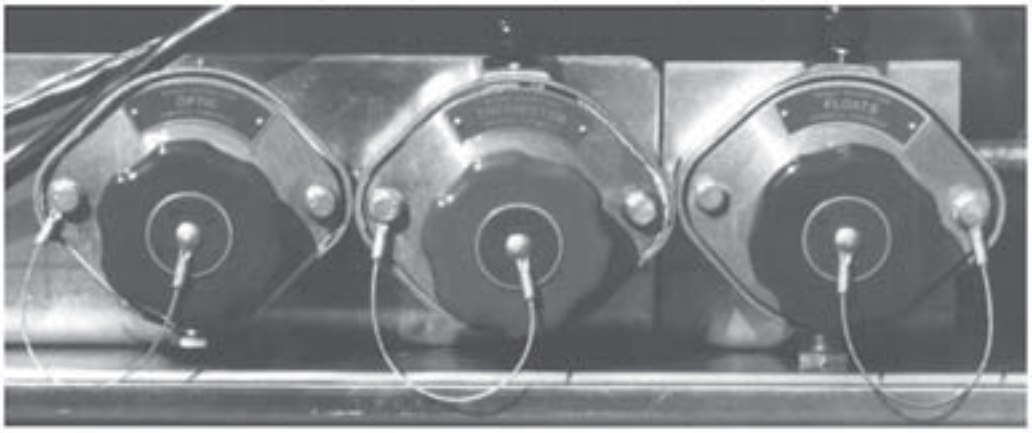

Optic, Thermistor and Float Style Sockets

Scully sockets offer the widest range of truck to rack system compatibility in the petrochemical transport industry. They are designed for use with Scully Optic, Thermistor, Instant-On™, Load-Anywhere® and IntelliCheck® Overfill Prevention Systems.

These sockets are the vehicle mounted electrical connector of Scully Tank Truck Overfill Prevention Systems. They provide a simple, durable connection by way of the mating plug mounted on the loading rack.

Scully Sockets offer all these advantages:

- Designs which meet API (American Petroleum Institute) standards for optic and thermistor systems.
- Used in conjunction with Scully loading rack overfill prevention controls - the #1 choice of bottom loading terminals in the United States.
- Different socket styles for complete compatibility with all loading rack plug styles.
- Easy gripping vinyl protective cap is included.
- Internal mounting holes for easy installation with plenty of room for probe wiring connections.
- Two 1/2" NPT threaded conduit entry holes for installation flexibility.
- Scully style sockets feature stainless steel contact pins. All other sockets feature plated brass pins.
- Color coded labels for easy identification.
- Durable construction to withstand the rigors of road travel.

Setting New Standards In Safety

scully

Scully Sockets Are Your Connection t

Plug to socket connection

Scully Sockets are the most durable vehicle connections available for your loading needs. With over 90% of all bottom loading terminals in the United States using Scully Overfill Prevention Systems, Scully Sockets offer you the compatibility you need at any terminal.

Scully offers sockets which are compatible with all overfill prevention rack plug and cable units in use today. The sockets mount on the truck and are wired to either Optic, Thermistor, or Instant-On™ tank truck overfill prevention sensors manufactured by Scully. The sockets are available in Scully, API and SAE styles. These offer easy connection to the rack control monitor plug. *The style of plug at each loading terminal you frequent should be considered before ordering to insure a compatible connection.*

The lightweight vinyl protective caps are included. They feature a hand grip that allows for easy removal and a captive cable attachment to prevent loss. The caps help prevent socket corrosion by protecting the contact pins from dirt and moisture.

When ordering sockets for the IntelliCheck® or Load-Anywhere® system, order as many sockets as necessary based on the plug styles and/or types of overfill prevention systems at the terminals which you frequent. The on-board control monitors of the IntelliCheck and Load-Anywhere systems has compatible output signals for optic, thermistor or float overfill prevention systems to provide for complete compatibility at any terminal.

All dimensions in inches

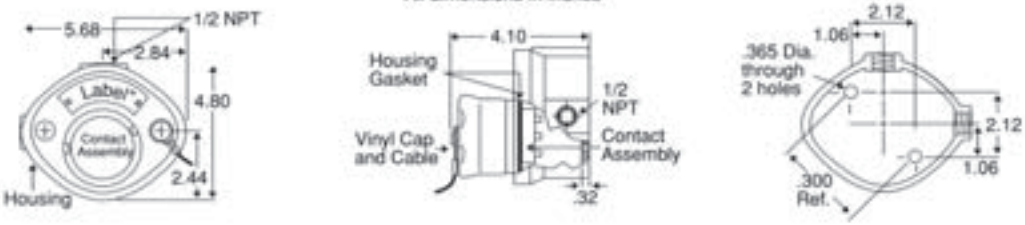

Technical Information

Materials:	Socket body:	die cast zinc	**Contacts:**	Scully style stainless steel SAE J560 style: zinc plated brass
	Housing:	zinc/aluminum alloy		
	Insulator:	glass filled poly-carbonate	**Connections:**	Provided by screw terminals
	Dust cap:	molded vinyl	**Size:**	Refer to diagram
Conduit Entry:	Two 1/2" NPT threaded entry holes		**Weight:**	4.8 lbs. (2.2 kg.)

scully

Complete Loading Rack Compatibility

Optic Sockets

SJ-6W: API standard three "J" slot socket for use with the Scully SC-6W three bayonet pin plug found on most Scully ST-35 and may Biclops® rack overfill prevention systems.

SJ-6SO: Scully style two "J" slot socket for use with the Scully SC-6A and SC-6AO two bayonet pin plug found on Scully ST-35 and most Biclops rack overfill prevention systems.

SJ-6X: SAE J560 style socket for use with the Scully bayonet pin Scully SC-8A plug found on some Scully ST-35 and Biclops rack overfill prevention systems.

Thermistor Sockets

SJ-6S: API standard two "J" slot socket for use with the two bayonet pin Scully SC-6A plug found on most Scully ST-6 and Biclops Rack overfill prevention systems.

SJ-6: SAE J560 style socket keyed for use with the Scully SC-6 SAE J560 style plug found on many Scully ST-6 and Biclops rack overfill prevention systems.

SJ-8S: Two "J" slot Scully style socket for use with the two Style Plug Adapters found on most Scully ST-8 and Biclops II rack overfill prevention systems.

Float Sockets

SJ-6F: Scully SAE J560 style socket for use with the SAE J560 plug found on most float style loading racks.

SJ-4D: Multi-purpose, 4 pole Socket. Mates with SC-1 Sculcon® and cane probes.

RHA-6 HA-6

Plug Adapters: 7-way to Scully style plug adapters.

scully

All sockets except the SJ-4D include vinyl protective cap

Description	Part #
SJ-6W Optic Socket, WOGA Pattern, API Optic Standard	07974
SJ-6SO Optic Socket, Scully Pattern	07973
SJ-6X Optic Socket, SAE J560 Pattern	08199
SJ-6S Thermistor Socket, API Thermistor Standard	07720
SJ-6 Thermistor Socket, SAE J560 Pattern	07681
SJ-6F Float Socket, SAE J560 Pattern	08116
SJ-4D Pole Pattern Socket	07707

Electronic Dummies for Thermistor Sockets

Description	Part #
SD-5E, five element dummy for 1 compartment thermistor or two-wire Instant-On equipped vehicles	08298

Scully Plug to Socket Adapters

Description	Part #
HA-6 adapter. Permits SAE-J560, 7 pole socket to mate with Scully SC-6A and SC-6AO rack plugs.	07735
RHA-6 reverse adapter. Permits Scully SJ-6S, SJ-8S, SJ-F sockets to mate with SAE-J560 7 pole rack plugs.	07795

Socket and Plug to Socket Adapter Replacement Parts

Description	Part #
Housing for all socket models	21810
Replacement Vinyl Cap for SJ-6W, SJ-6SO, SJ-6X	08575
Replacement Vinyl Cap for SJ-6S, SJ-6	08574
Replacement Vinyl Cap for SJ-6F	08576
Complete Faceplate Assembly with vinyl cap, SJ-6W socket	21790
Complete Faceplate Assembly with vinyl cap, SJ-6SO socket	21576
Complete Faceplate Assembly with vinyl cap, SJ-6X socket	21192
Complete Faceplate Assembly with vinyl cap, SJ-6S socket	20770
Complete Faceplate Assembly with vinyl cap, SJ-6 socket	21074
Complete Faceplate Assembly with vinyl cap, SJ-6F socket	21424
Contact Assembly for SJ-6S socket	20757
Contact Assembly for SJ-6SO and SJ-6W	21171
Contact Assembly for SJ-F socket	21104
Contact Assembly for all J560 Sockets	27450
Housing Gasket for all Socket Models	20628
Replacement Single Pin and Screw for all Sockets	07783
Socket Cleaner for all Sockets	07811
SJ-6W Style Socket Faceplate and Label, Less Contact Assembly	08510
SJ-6F Style Socket Faceplate and Label, Less Contact Assembly	08514
SJ-6SO and SJ-6X Style Socket Faceplate and Label, Less Contact Assembly	08515
SJ-6 and SJ-6S Style Socket Faceplate and Label, Less Contact Assembly	08516
J560 Insert Adapter for use in Scully Style Faceplates	20629
Crimp-on Insulated Wire Pin Connectors, 10 Pieces	08318
Large Contact Assembly for HA-6	20913
Small Contact Assembly for HA-6	27449
Large Contact Assembly for RHA-6	22290
Large Contact Assembly for RHA-6	21137

Place Your Order Today! Call Scully at 1-800-272-8559!

Biclops, Dynacheck, Dynamic Self-Checking, Dynamic Self-Test, Faytsafe, IntelliCheck, Intelltrol, Intelliview, Load-Anywhere, Marsafety, MulteCept, Sculcon, Scultrol, Scully, Soul-Tite, TABS and V.I.P. and registered trademarks of Scully Signal Company. Specifications are subject to change without notice.

scully

Replacement Parts Sheet

SJ-6S Thermistor Socket
Part # 07720

	Part #	Description	Qty
	20770	Complete Faceplate Assembly, Includes 4 8 11 9	1
1	07783	Single Pin and Screw	1
2	50141	Faceplate Bolt	2
3	51116	Lock Washer	1
4	N/A	Ground Wire	1
5	20628	Housing Gasket	1
6	21810	Housing Only	1
7	50513	Drain Hole Screw	1
8	20757	Contact Assembly w/ 8 pins and screws)	1
9	08574	Green Vinyl Cap	1
	08570	Green Metal Cap (not shown)	1
10	N/A	Cap Cable Bushing (Included with 9)	1
11	08516	Faceplate and Label, Less Contact Assembly	1
12	50130	Dummy Element Mounting Bolt	1
13	50740	1/2" NPT Pipe Plug	1

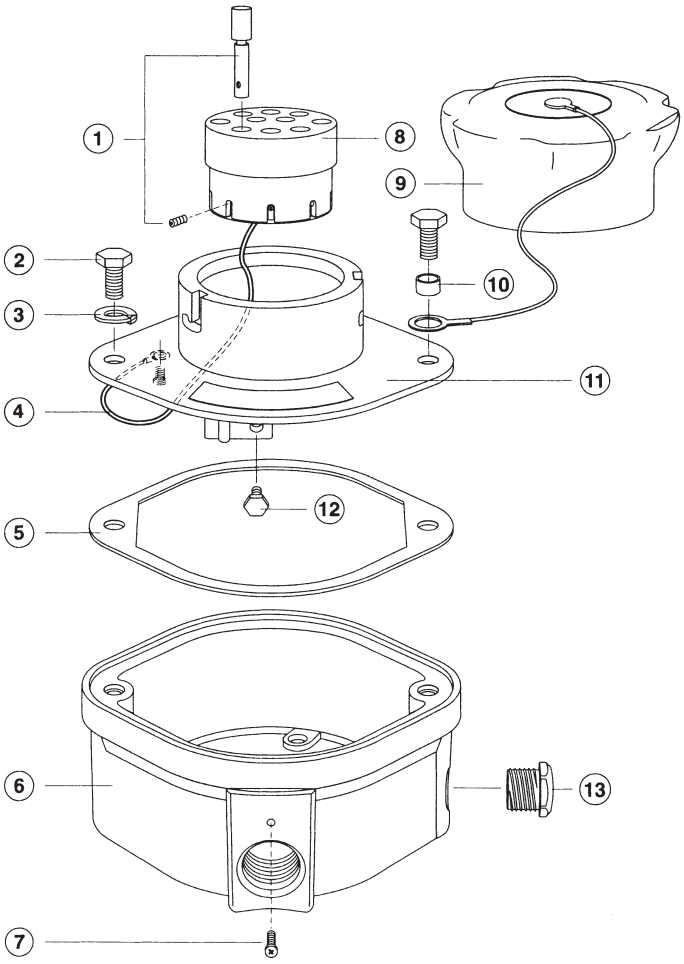

scully

Replacement Parts Sheet

SJ-6SO Optic Socket
Part # 07973

	Part #	Description	Qty
	21576	Complete Faceplate Assembly, Includes 4 8 11	1
1	07783	Single Pin and Screw	1
2	50141	Faceplate Bolt	2
3	51116	Lock Washer	1
4	N/A	Ground Wire	1
5	20628	Housing Gasket	1
6	21810	Housing Only	1
7	50513	Drain Hole Screw	1
8	21771	Contact Assembly (w/ 6 pins and screws)	1
9	08575	Blue Vinyl Cap	1
	08571	Blue Metal Cap (not shown)	1
10	N/A	Cap Cable Bushing (Included with 9)	1
11	08515	Faceplate and Label, Less Contact Assembly	1
12	50740	1/2" NPT Pipe Plug	1

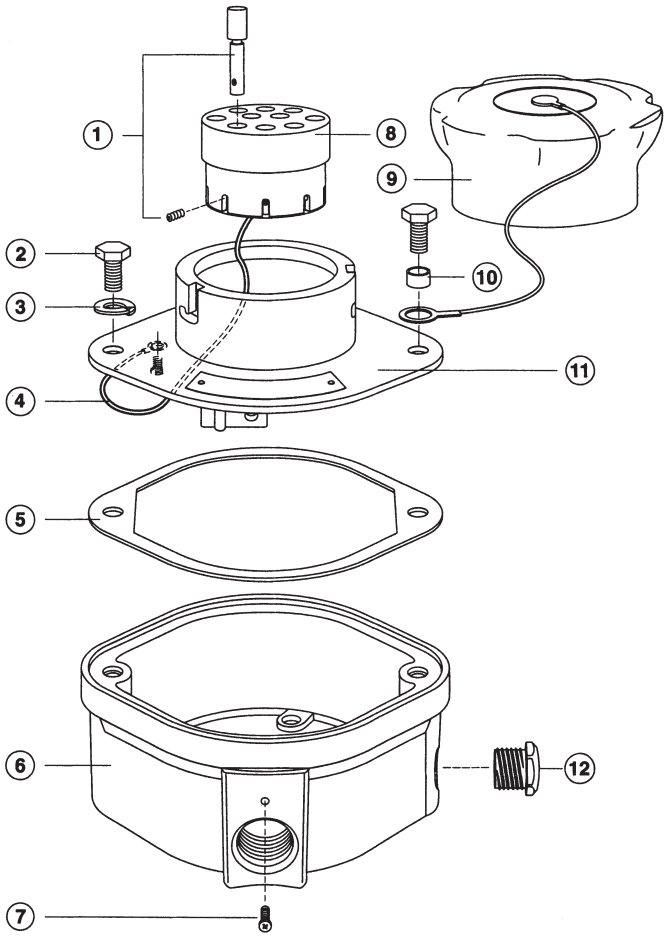

scully

Replacement Parts Sheet

SJ-6W Optic Socket
Part # 07974

	Part #	Description	Qty
	21790	Complete Faceplate Assembly, Includes 4 8 11	1
1	07783	Single Pin and Screw	1
2	50141	Faceplate Bolt	2
3	51116	Lock Washer	1
4	N/A	Ground Wire	1
5	20628	Housing Gasket	1
6	21810	Housing Only	1
7	50513	Drain Hole Screw	1
8	21771	Contact Assembly (w/6 pins), Includes 1	1
9	08575	Blue Vinyl Cap	1
	08572	Blue Metal Cap (not shown)	1
10	N/A	Cap Cable Bushing (Included with 9)	1
11	08510	Faceplate and Label, Less Contact Assembly	1
12	50740	1/2" NPT Pipe Plug	1

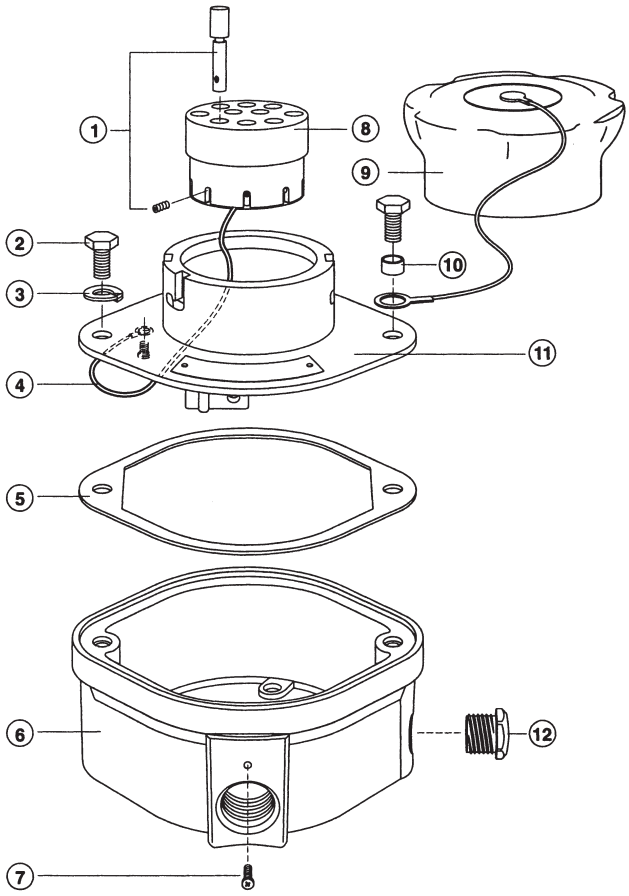

scully

Universal Truck Tester

Tank Truck Overfill Prevention System Diagnostics

The Scully Universal Truck Tester is the most advanced and comprehensive truck tester available. It checks the operation of tank truck overfill prevention, and self-proving grounding systems. Complete diagnostics limit the expense of downtime.

- Tests all Scully Optic and Thermister Overfill Sensors, the Intellicheck® System, The Load Anywhere® System and the Liquidometer TABS™ System output.
- Simultaneously tests all compartment sensors.
- The only tester which will check the operation of the Ground Bolt and Ball.
- Shows a more accurate reading than any other tester on the market with test results as either "Good, Poor, or Fail" to easily diagnose service requirements.
- A poor reading alerts the driver that it may be time to repair or replace the sensor in question.
- A variety of plug and cable assemplies are available according to the socket needs of the user.
- Rustproof, weather resistant housing.
- Easy to read multicolored LED display.
- Runs on standard "D" size Alkaline batteries.

Operation

Move the selector switch to the desired setting. Connect the tester to the tank truck socket with the appropriate plug and cable. The test results will be shown clearly on the easy to read LED display.

Compatability

The tester is compatable with Scully Intellicheck® Load Anywhere®, and independent Scully optic and thermister tank truck sensors.

Technical Specifications

Power supply:	8"D" Cell, alkaline batteries
Battery access:	Remove 2 screws in front panel
Operating temperature range:	-13°F to +113°F (-25°C to +45°C)
Maximum number of compartments:	8
Dimensions:	8" x 6" x 4"
Weight (without batteries):	3.8 lbs (1.7Kg)

Ordering Information

Description	Part No.
Scully Universal Tester*	08938
PCAM, 10 Pole Scully Plug and Cable	08926
PCAM, 6 Pole WOGA Plug and Cable	08927
PCAM, 7 Pole J560 Optic	08928
PCAM, 4 Pole Plug and Cable	08936
Adapter 7 Pole Scully Optic to J560	07735

*Order appropriate plug & cable with tester. "D" size batteries not included.

For further information and technical service, please call scully at (800) 272-8559.

Biclops, Dynacheck, Dynamic Self-Checking, Dynamic Self-Test, Faytsafe, Intellicheck, Intellitrol, Intellivew, Load Anywhere, Maxsafety, MultaCept,Scully, Scultrol, Scul-Lock, Scul-Tel, Scul-Tite, TABS and V.I.P. are registered trademarks of the Scully Signal Company

Specifications are subject to change without notice

Setting New Standards In Safety

scully