410 1-1/4" FUEL OIL NOZZLE PARTS LIST

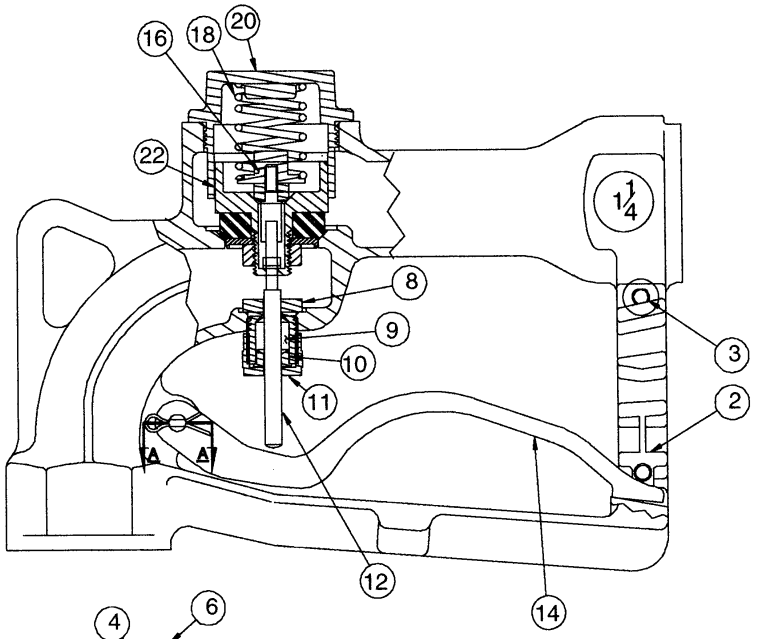

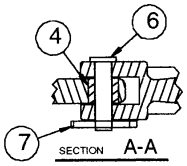

SERVICE KIT P/N 90001

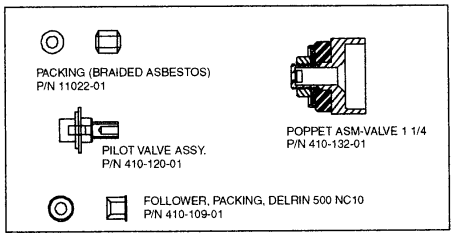

FOR PRICES REFER TO REPAIR PARTS PRICE LIST

WARNING: THIS IS A NON-AUTOMATIC NOZZLE WITH MANUALLY OPERATED LATCH WHICH WILL NOT SHUT-OFF AUTOMATICALLY. USE SHOULD BE LIMITED TO APPLICATIONS SANCTIONED BY "OSHA", "STATE FIRE MARSHAL CODES", AND OTHER APPROPRIATE REGULATING BODIES AND/OR SAFETY CODES.

410-300 ASM. (MEDIUM BODY)		
POPPET ASM.(BRASS)	410-132-01	22
		21
CAP-NOZZLE	410-103-01	20
		19
SPRING-VALVE	410-121-01	18
		17
PILOT VALVE ASS'Y.	410-120-01	16
		15
LEVER-HAND(BRASS)	410-201-01	14
		13
STEM	410-118-01	12
NUT-PACKING	410-113-01	11
FOLLOWER PACKING	410-109-01	10
PACKING	11022-01	9
GLAND-PACKING	498-105-01	8
PIN-COTTER	11135-01	7
PIN-CLEVIS	11488-02	6
		5
BUSHING	410-115-01	4
FLAT HEAD SCREWS	11015-01	3
LATCH-LEVER	410-114-01	2
		1
PART NAME	PART NUMBER	ITEM

410 1-1/2" FUEL OIL NOZZLE PARTS LIST

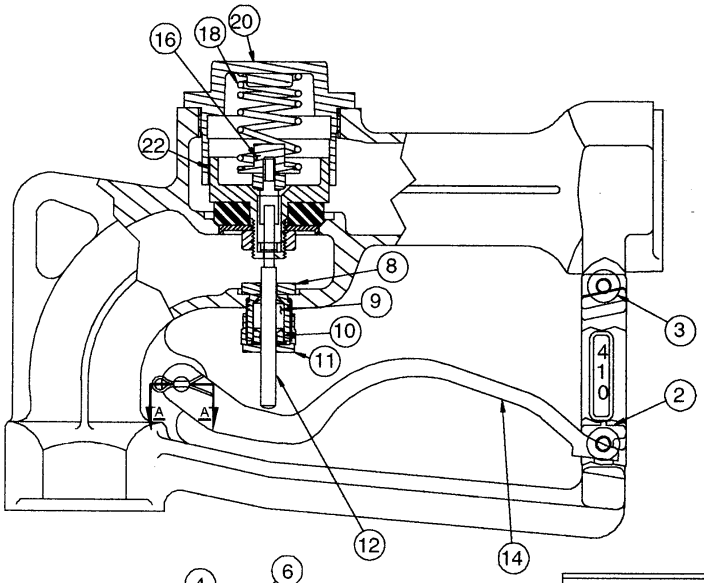

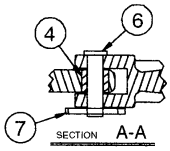

SERVICE KIT P/N 90000

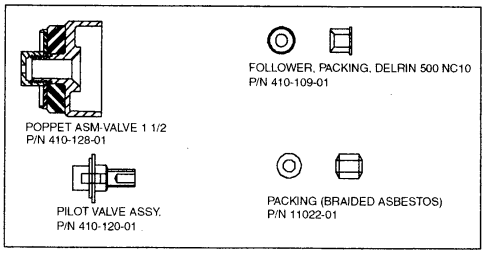

FOR PRICES REFER TO REPAIR PARTS PRICE LIST

WARNING: THIS IS A NON-AUTOMATIC NOZZLE WITH MANUALLY OPERATED LATCH WHICH WILL NOT SHUT-OFF AUTOMATICALLY. USE SHOULD BE LIMITED TO APPLICATIONS SANCTIONED BY "OSHA", "STATE FIRE MARSHAL CODES", AND OTHER APPROPRIATE REGULATING BODIES AND/OR SAFETY CODES.

410-401 ASM. (LARGE BODY)		
POPPET ASM.	410-128-01	22
		21
CAP-NOZZLE	410-102-01	20
		19
SPRING-VALVE	410-135-01	18
		17
PILOT VALVE ASS'Y.	410-120-01	16
		15
LEVER-HAND(BRASS)	410-201-01	14
		13
STEM	410-118-01	12
NUT-PACKING	410-113-01	11
FOLLOWER PACKING	410-109-01	10
PACKING	11022-01	9
GLAND-PACKING	498-105-01	8
PIN-COTTER	11135-01	7
PIN-CLEVIS	11488-02	6
		5
BUSHING	410-115-01	4
FLAT HEAD SCREWS	11015-01	3
LATCH-LEVER	410-114-01	2
		1
PART NAME	PART NUMBER	ITEM

490 1" & 1-1/4" FUEL OIL NOZZLE PARTS LIST

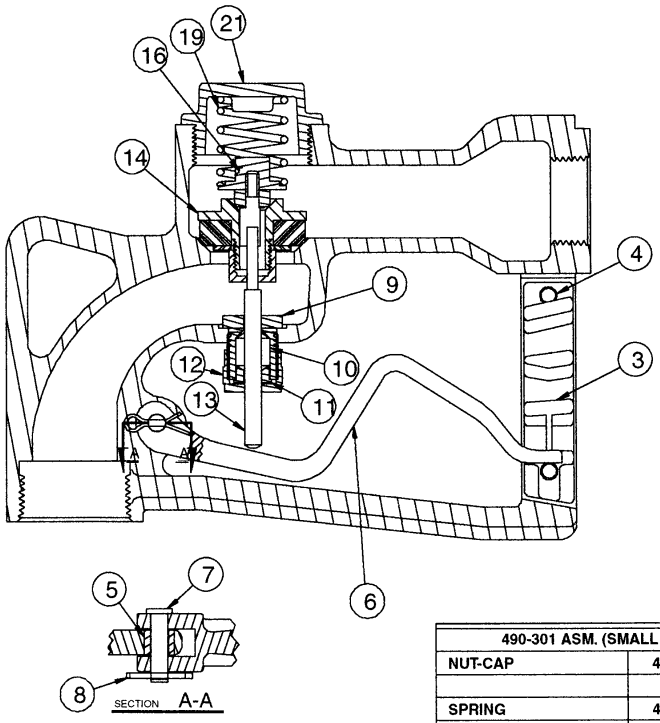

SERVICE KIT P/N 90016

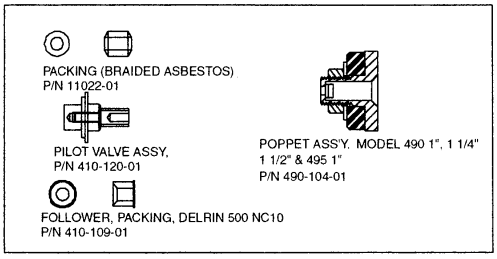

FOR PRICES REFER TO REPAIR PARTS PRICE LIST

WARNING: THIS IS A NON-AUTOMATIC NOZZLE WITH MANUALLY OPERATED LATCH WHICH WILL NOT SHUT-OFF AUTOMATICALLY. USE SHOULD BE LIMITED TO APPLICATIONS SANCTIONED BY "OSHA", "STATE FIRE MARSHAL CODES", AND OTHER APPROPRIATE REGULATING BODIES AND/OR SAFETY CODES.

490-301 ASM. (SMALL BODY)		
NUT-CAP	490-102-01	21
		20
SPRING	410-121-01	19
		18
		17
PILOT VALVE ASS'Y.	410-120-01	16
		15
POPPET ASSEMBLY	490-104-01	14
STEM	410-118-01	13
PACKING NUT	410-113-01	12
FOLLOWER-PACKING	410-109-01	11
PACKING	11022-01	10
PACKING GLAND	498-105-01	9
PIN-COTTER	11135-01	8
PIN-CLEVIS	11488-02	7
LEVER-HAND	490-300-01	6
BUSHING	410-115-01	5
FLAT HEAD SCREW	11015-01	4
LATCH-LEVER	410-114-01	3
		2
		1
PART NAME	PART NUMBER	ITEM

490 1-1/2" FUEL OIL NOZZLE PARTS LIST

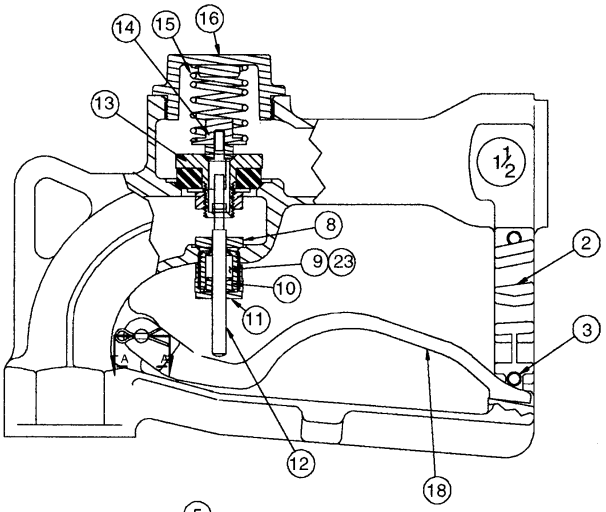

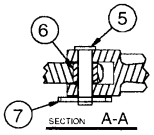

SERVICE KIT P/N 90016

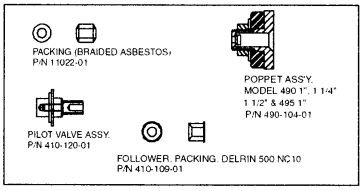

FOR PRICES REFER TO REPAIR PARTS PRICE LIST

WARNING: THIS IS A NON-AUTOMATIC NOZZLE WITH MANUALLY OPERATED LATCH WHICH WILL NOT SHUT-OFF AUTOMATICALLY. USE SHOULD BE LIMITED TO APPLICATIONS SANCTIONED BY "OSHA", "STATE FIRE MARSHAL CODES", AND OTHER APPROPRIATE REGULATING BODIES AND/OR SAFETY CODES.

490-302 ASM. (MEDIUM BODY)		
		24
PACKING	11359-01	23
		22
		21
		20
		19
LEVER-HAND	410-201-01	18
		17
NUT-CAP	490-106-01	16
SPRING	410-121-01	15
PILOT VALVE ASS'Y.	410-120-01	14
POPPET ASS'Y.	490-104-01	13
STEM	410-118-01	12
NUT-PACKING	410-113-01	11
FOLLOWER PACKING	410-109-01	10
PACKING	11022-01	9
GLAND-PACKING	498-105-01	8
PIN-COTTER	11135-01	7
BUSHING	410-115-01	6
PIN-CLEVIS	11488-02	5
		4
SCREW-FLAT HEAD	11015-01	3
LATCH-LEVER	410-114-01	2
		1
PART NAME	PART NUMBER	ITEM

495 1" AIRCRAFT FUEL NOZZLE PARTS LIST

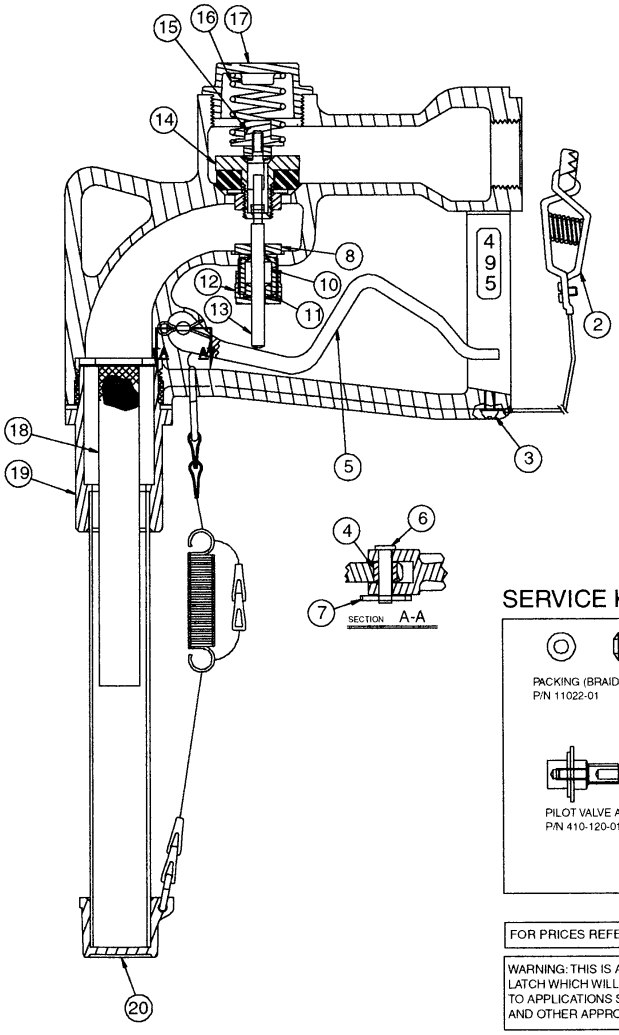

495-402 ASM. (SMALL BODY)		
		22
		21
DUST CAP ASSEMBLY	495-111-01	20
TUBE & NUT ASSY.	495-112-01	19
STRAINER ASSEMBLY	495-204-01	18
CAP-NOZZLE	490-102-01	17
SPRING-VALVE	410-121-01	16
PILOT VALVE	410-120-01	15
POPPET ASSEMBLY	490-104-01	14
STEM	410-118-01	13
NUT-PACKING	410-113-01	12
FOLLOWER-PACKING	410-109-01	11
PACKING	11022-01	10
		9
GLAND-PACKING	498-105-01	8
PIN-COTTER	11135-01	7
PIN-CLEVIS	11488-02	6
LEVER-HAND	490-300-01	5
BUSHING	410-115-01	4
RD HD MACH SCREW	11018-02	3
GROUND WIRE ASS'Y.	495-107-01	2
		1
PART NAME	PART NUMBER	ITEM

SERVICE KIT P/N 90016

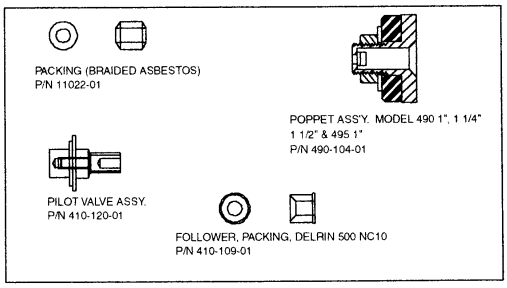

FOR PRICES REFER TO REPAIR PARTS PRICE LIST

WARNING: THIS IS A NON-AUTOMATIC NOZZLE WITH MANUALLY OPERATED LATCH WHICH WILL NOT SHUT-OFF AUTOMATICALLY. USE SHOULD BE LIMITED TO APPLICATIONS SANCTIONED BY "OSHA", "STATE FIRE MARSHAL CODES", AND OTHER APPROPRIATE REGULATING BODIES AND/OR SAFETY CODES.

495 1-1/4" AIRCRAFT FUEL NOZZLE PARTS LIST

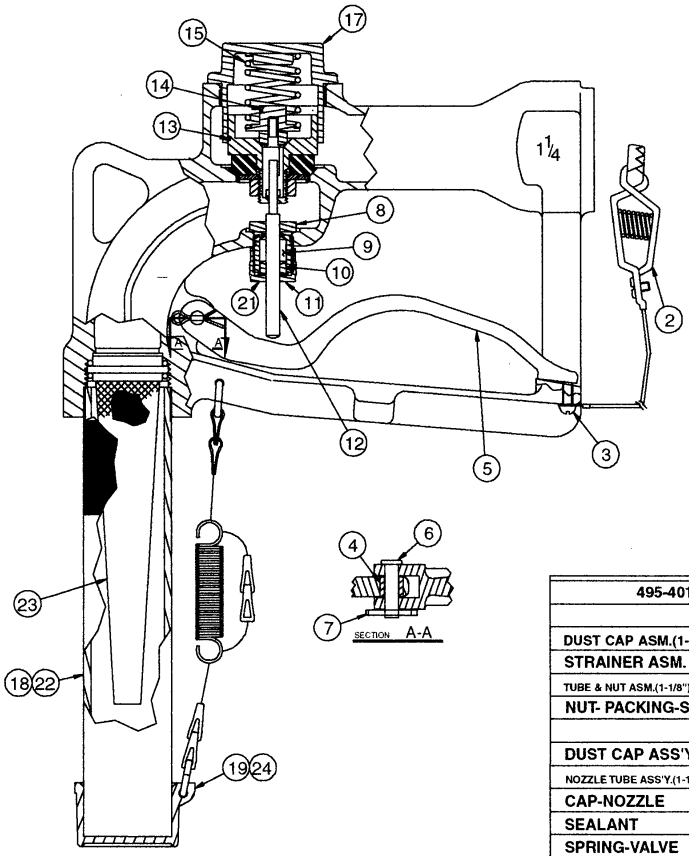

SERVICE KIT P/N 90001

PACKING (BRAIDED ASBESTOS)
P/N 11022-01

POPPET ASM-VALVE 1 1/4
P/N 410-132-01

PILOT VALVE ASSY.
P/N 410-120-01

FOLLOWER. PACKING, DELRIN 500 NC10
P/N 410-109-01

FOR PRICES REFER TO REPAIR PARTS PRICE LIST

WARNING: THIS IS A NON-AUTOMATIC NOZZLE WITH MANUALLY OPERATED LATCH WHICH WILL NOT SHUT-OFF AUTOMATICALLY. USE SHOULD BE LIMITED TO APPLICATIONS SANCTIONED BY "OSHA", "STATE FIRE MARSHAL CODES", AND OTHER APPROPRIATE REGULATING BODIES AND/OR SAFETY CODES.

495-401 ASM. (MEDIUM BODY)		
		25
DUST CAP ASM.(1-1/8")	495-111-01	24
STRAINER ASM.	495-204-01	23
TUBE & NUT ASM.(1-1/8")	495-112-01	22
NUT- PACKING-SS	410-152-01	21
		20
DUST CAP ASS'Y.	495-106-01	19
NOZZLE TUBE ASS'Y.(1-1/4)	495-122-01	18
CAP-NOZZLE	410-103-01	17
SEALANT	12001-01	16
SPRING-VALVE	410-121-01	15
PILOT VALVE	410-120-01	14
POPPET ASS'Y.	410-132-01	13
STEM	410-118-01	12
NUT-PACKING	410-113-01	11
FOLLOWER PACKING	410-109-01	10
PACKING	11022-01	9
GLAND-PACKING	498-105-01	8
PIN-COTTER	11135-01	7
PIN-CLEVIS	11488-02	6
LEVER-HAND	410-201-01	5
BUSHING	410-115-01	4
RD HD MACH SCREW	11018-02	3
GROUND WIRE ASS'Y.	495-107-01	2
		1
PART NAME	PART NUMBER	ITEM

495 1-1/2" JET/AIRCRAFT FUEL NOZZLE PARTS LIST

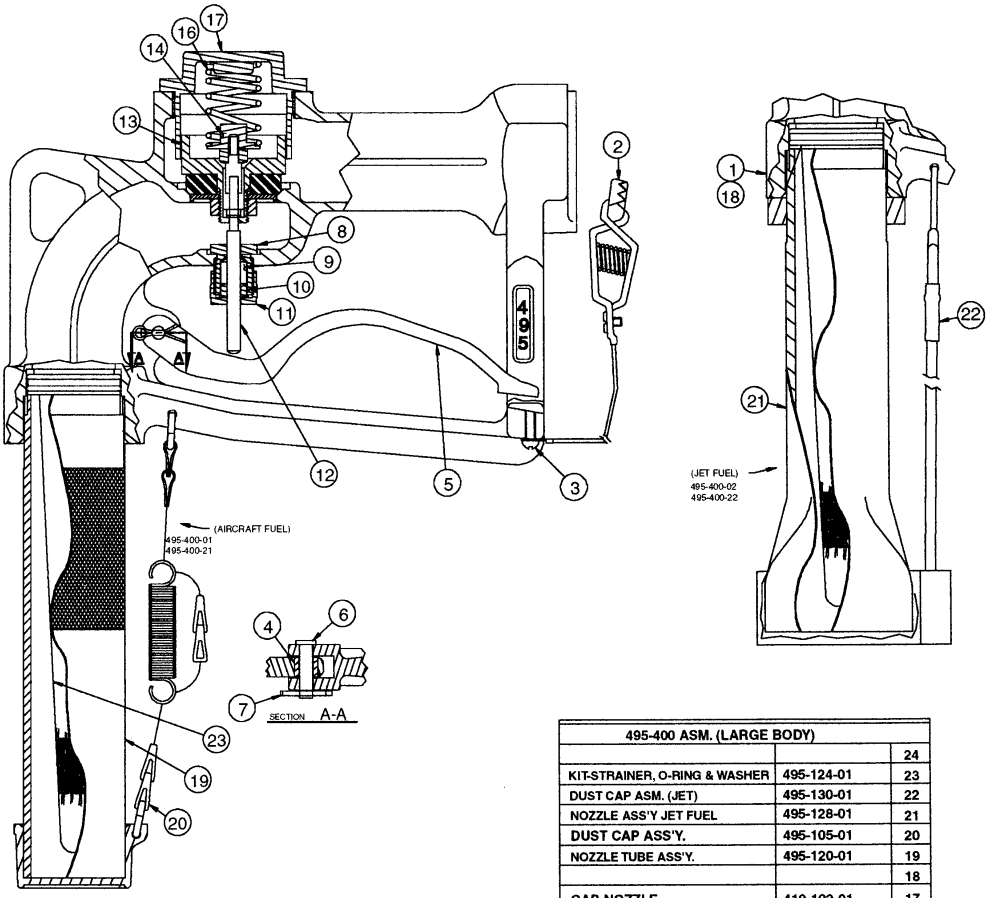

495-400 ASM. (LARGE BODY)		
		24
KIT-STRAINER, O-RING & WASHER	495-124-01	23
DUST CAP ASM. (JET)	495-130-01	22
NOZZLE ASS'Y JET FUEL	495-128-01	21
DUST CAP ASS'Y.	495-105-01	20
NOZZLE TUBE ASS'Y.	495-120-01	19
		18
CAP-NOZZLE	410-102-01	17
SPRING-VALVE	410-135-01	16
SEALANT	12001-01	15
PILOT VALVE	410-120-01	14
POPPET VALVE ASS'Y.	410-128-01	13
STEM	410-118-01	12
PACKING NUT	410-113-01	11
FOLLOWER PACKING	410-109-01	10
PACKING	11022-01	9
PACKING GLAND	498-105-01	8
PIN-COTTER	11135-01	7
PIN-CLEVIS	11488-02	6
LEVER-HAND	410-201-01	5
BUSHING	410-115-01	4
RD HD MACH SCREW	11018-02	3
GROUND WIRE ASS'Y.	495-107-01	2
		1
PART NAME	PART NUMBER	ITEM

SERVICE KIT P/N 90000

POPPET ASM-VALVE 1 1/2
P/N 410-128-01

FOLLOWER, PACKING,
DELRIN 500 NC10
P/N 410-109-01

PILOT VALVE ASSY.
P/N 410-120-01

PACKING (BRAIDED ASBESTOS)
P/N 11022-01

FOR PRICES REFER TO REPAIR PARTS PRICE LIST

WARNING: THIS IS A NON-AUTOMATIC NOZZLE WITH MANUALLY OPERATED LATCH WHICH WILL NOT SHUT-OFF AUTOMATICALLY. USE SHOULD BE LIMITED TO APPLICATIONS SANCTIONED BY "OSHA", "STATE FIRE MARSHAL CODES", AND OTHER APPROPRIATE REGULATING BODIES AND/OR SAFETY CODES.

Scully Truck Equipment

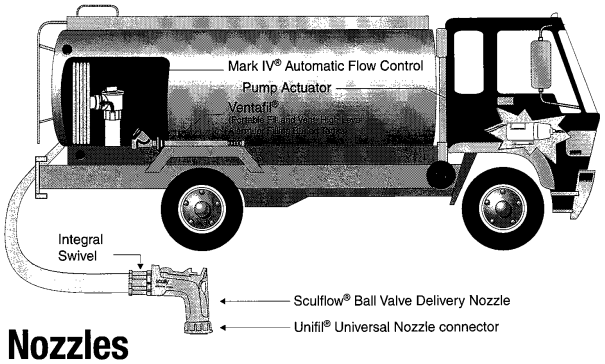

Scully Delivery Nozzles

Dependable Performance for Countless Deliveries

Scully delivery nozzles are considered by many to be the finest in the world. They are used for delivering heating oils, lubricants, gasolines, jet fuels, chemicals and other liquids. Their durable construction allows them to provide dependable performance over countless deliveries. Scully nozzles offer optimum pumping speed and control to improve your delivery efficiency.

Sculflow® Nozzles

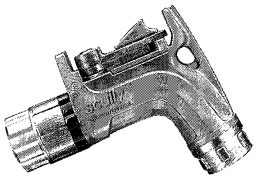

The Most Popular Delivery Nozzles in the World

- The leading choice for light product, high volume deliveries.
- Reduced pressure drop allows for faster pumping speeds.
- Prevent closing shock to prolong truck equipment life.
- Feature leak-proof filling and no-drip operation.
- Original ball valve design and deadbolt locking handle.

Inlet Style	Inlet Thread	Outlet Thread	Part #
FEMALE	1¼"	UNIFIL	05062
FEMALE	1¼"	1¼"	05066
FEMALE	1¼"	1½"	05070
FEMALE	1½"	UNIFIL	05064
FEMALE	1½"	1¼"	05068
FEMALE	1½"	1½"	05072
MALE	1¼"	UNIFIL	05100
MALE	1½"	UNIFIL	05106

All units listed have 3 P.S.I. anti-drip valves, call for 5 P.S.I. part numbers. All units listed include swivels.
NOTE: 1¼" nozzles fit 1¼" hoses. 1½" nozzles fit 1⅜" hoses.

Description	Part #
Seal kit, no swivel parts	05415
Rebuild kit, seals and mechanical parts, no swivel parts	05416
Handle upgrade kit	11604
Anti-Drip valve, 3 P.S.I.	11502

Sculflow Options

- 5 P.S.I. anti-drip valve.
- Without swivel.
- Sightglass on inlet.
- Special chemicals.

Consult Scully for part numbers.

Sculflow Nozzle Materials

- Aluminum body.
- Hard chrome plated brass ball valve.
- Teflon ball seat.
- Delrin ball follower.
- Aluminum and zinc swivel body.
- Teflon swivel seal.
- Nitrile and viton seals.

Sculflow Flow Rates

- Used for deliveries up to 100 G.P.M.

Replacement Parts

- Consult the parts list.

Sculflow® Nozzle Components

Diagram and Complete Replacement Parts List

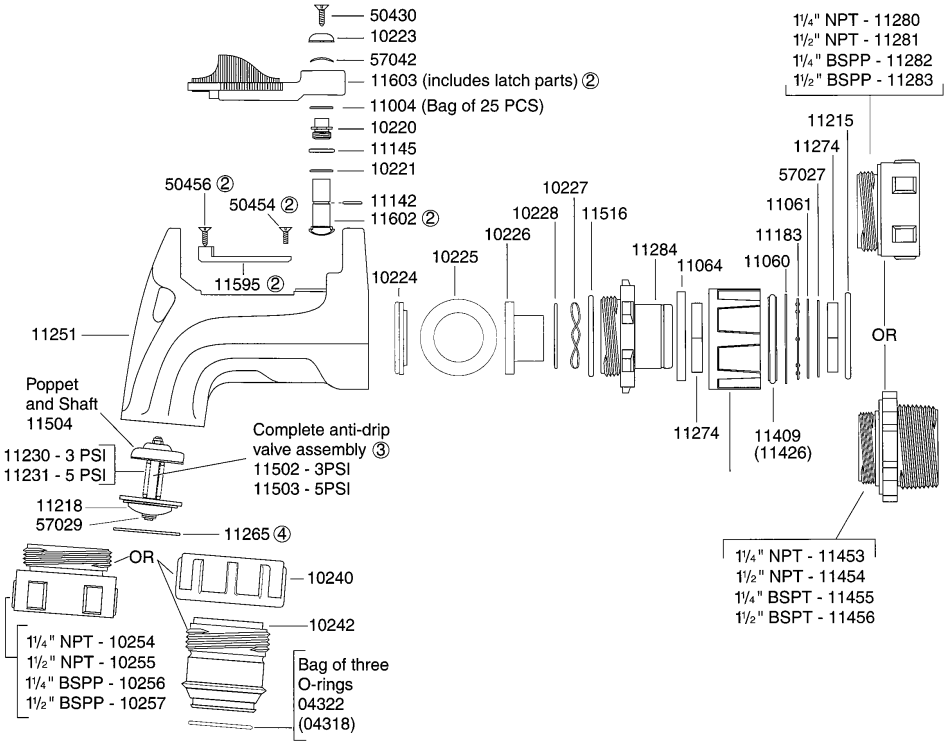

Super Nozzles Components

Diagram and Complete Replacement Parts List

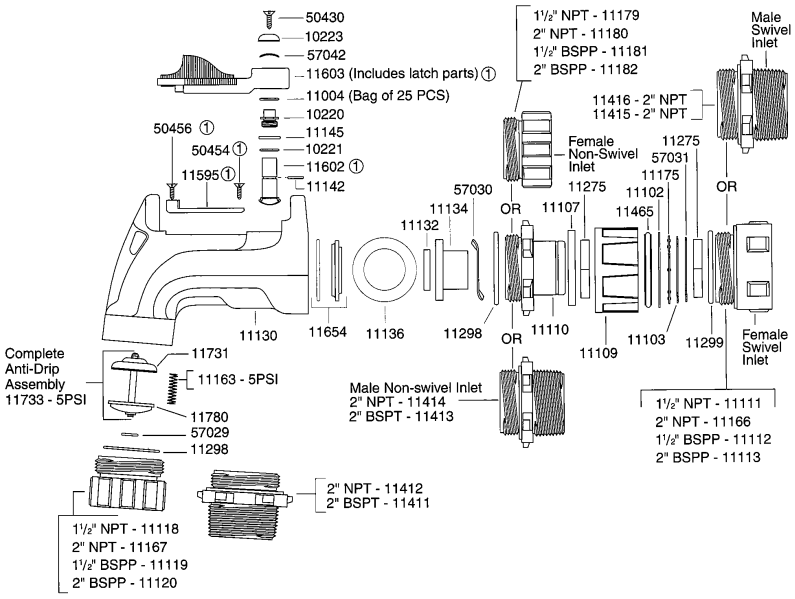

Check Notes Before Ordering Parts:

Super Nozzle Notes:

Handle, latchplate and shaft must be replaced as a group on early Super nozzles, 11604. All seals are viton.

Recommendation:

Use an anti-seize type compound when making up aluminum threaded joints.

Operation:

To open nozzle pull latch button back and swing handle to either side. To close nozzle push handle back to center position making sure latch drops into slot in latchplate.

Sight Glass Assembly

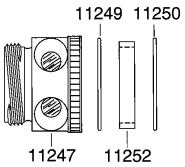

Handle and Latch Parts for Early Super Nozzles built before 1981

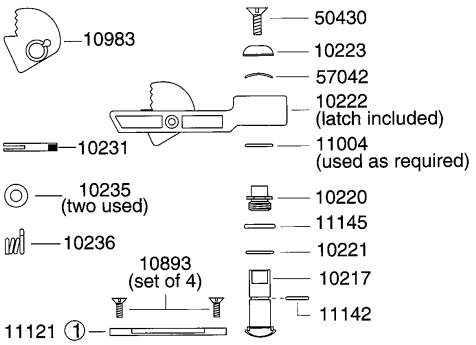

Note:

Current style handle may be used on early Super nozzles by replacing the handle, shaft, latchplate and latchplate screws as a group, 11604. Separate parts for 10232 cannot be assembled without special tools.

Nozzle Tightfill Hose Swivels

Increased Hose Flexibility and Freedom of Movement

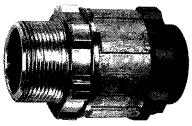

Male COM Swivels

- Advanced ball bearing design allows for easy rotation at all operating pressures.
- No nipple required to attach hose with male style swivels.
- Lightweight aluminum and zinc construction.
- Teflon high recovery seal and shielded bearings for optimum field performance.
- Wide variety of liquid product use.

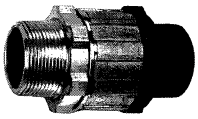

Male Inlet Threads

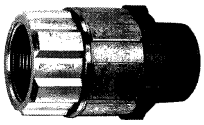

Female Inlet Threads

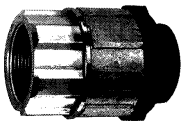

Female COM Swivels

Inlet Style	Inlet Pipe Size	Male Outlet Thread	Part #
FEMALE	1¼"	COM-A	05815
FEMALE	1¼"	1¼"	05817
FEMALE	1¼"	1½"	05818
FEMALE	1½"	COM-A	05816
FEMALE	1½"	1¼"	05819
FEMALE	1½"	1½"	05820
MALE	1¼"	COM-A	05865
MALE	1¼"	1¼"	05863
MALE	1½"	COM-A	05868
MALE	1½"	1¼"	05866
MALE	1½"	1½"	05867
FEMALE	1½"	COM-B	05824
FEMALE	2"	COM-B	05826
FEMALE	2"	2" COM-B	05828
MALE	2"	COM-B	05862
MALE	2"	2" COM-B	05874

COM-A outlet thread screws directly into the Sculflow Nozzle body only.
COM-B outlet thread screws directly into the Super Nozzle body only.

Description	Part #
Seal kit, to repair two "A" series swivels for Sculflow Nozzle	05859
Seal kit, to repair two "B" series swivels for Super Nozzle	05860

Nozzle Tightfill Hose Swivels

Diagram and Complete Replacement Parts List

Sculflow Nozzle Swivel Parts List (A series)

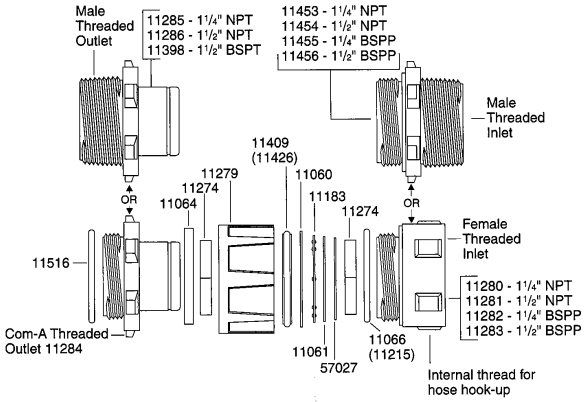

Check notes before ordering parts.

Notes:

1. When installing the retaining ring 57027 into its groove, the sharp edge must face toward the hose.

2. Dip the seal assembly 11409 in #10 oil or an equivalent lubricant before installing in swivel nut.

3. Part numbers in parenthesis are for Viton seals.

Recommendation:

Use an anti-seize compound before installing swivel on the nozzle to prevent galling and damage to parts.

Super Nozzle Swivel Parts List (B series)

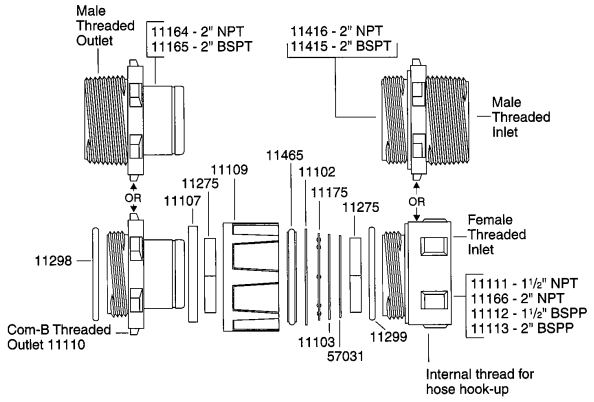

Check notes before ordering parts.

Notes:

1. When installing the retaining ring 57031 into its groove, the sharp edge must face toward the hose.

2. Dip the seal assembly 11465 in #10 oil or an equivalent lubricant before installing in swivel nut.

Recommendation:

Use an anti-seize compound before installing swivel on the nozzle to prevent galling and damage to parts.