New Caps for 1999

New 3" Stainless/Polymer Fusible*

Part Number 3-SPF

This new 3" Fusible Cap is manufactured in accordance with C.F.R.178.342-4 for use on MC307 Tank Trailers.

A chemically inert thermoplastic polymer is used to join the two-piece cap together.

Manufactured from heavy-duty castings, excessive wrenching will neither distort, or damage the fusible material.

**Patent application in progress.*

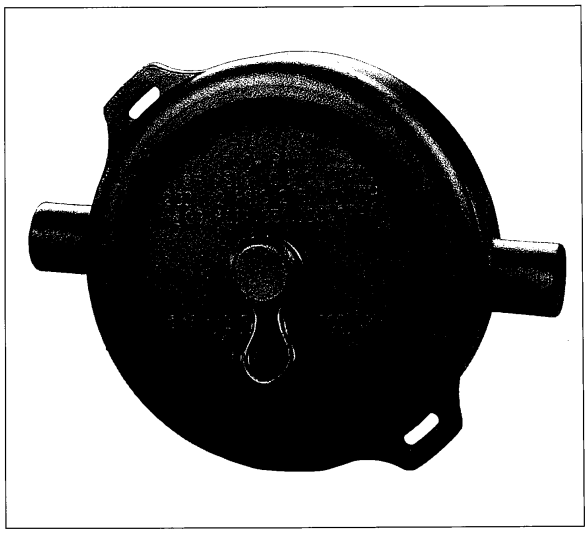

3" Stainless "Ring Boss" Cap

Part Number 3-SC-RB

This 3" Stainless Steel Cap is designed with a large."Ring Boss" feature to connect a heavier gauge cable attachment.

As with all Girard caps, a straight thread is used to make the cap easy to install and remove when needed. The cap seals hand tight on a gasket and resists cross-threading.

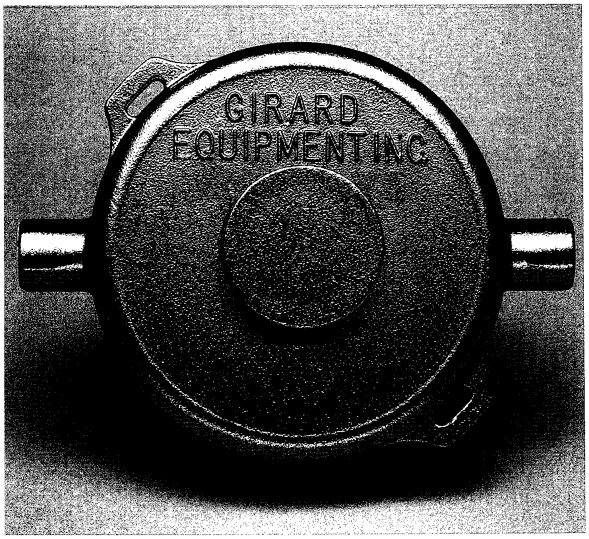

CAPS and FUSIBLE CAPS

Fusible Caps (*Straight Thread/Positive Seal*)

Manufactured in accordance with C.F.R.
178.342-4-(d) MC307
178.341-4 (d) MC306

The fusible device is activated by an element which operates at 250°F. Fusible Caps are prohibited on specification DOT 406 and DOT 407 Tank Trailers.

SIZE	STAINLESS STEEL	ALUMINMUM	MALLEABLE IRON
2"	2SF		
3"	3SF	3AF	3MF
4"	4SF	4AF	

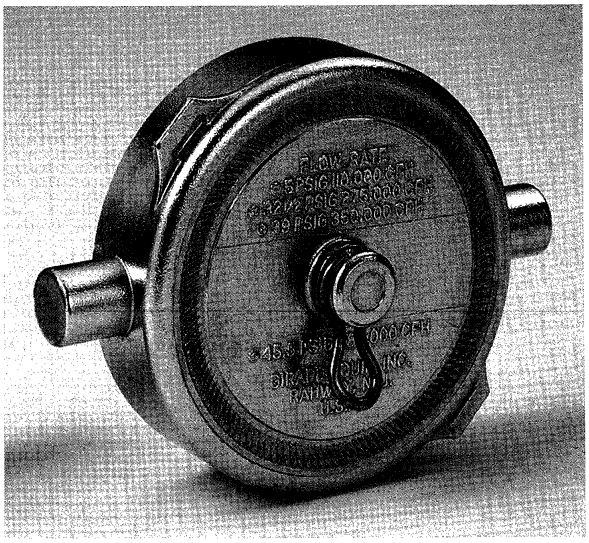

Fusible Cap Installation Instructions

1. Check the nipple that the cap is to be installed -Make sure it is round and has a smooth edge.
2. Always use a new Teflon® gasket.
3. Hand tighten until gasket meets the nipple's edge, then use a spanner wrench to snug

   Caution: Using a hammer to tighten the cap will cause damage to fusible material.

Caps (*Straight Thread/Positive Seal*)

All Girard caps feature this straight thread design which makes the caps easy to install and remove when needed. The caps seal hand tight on a gasket and resist "cross threading" on the tank's various nipples. The "eyelet" hook swivels 360 degrees and allow a chain, or cable to be attached.

SIZE	STAINLESS STEEL	ALUMINMUM	MALLEABLE IRON
2"	2SC	2AC	2MC
3"	3SC	3AC	3MC
4"	4SC	4AC	P.O.R.

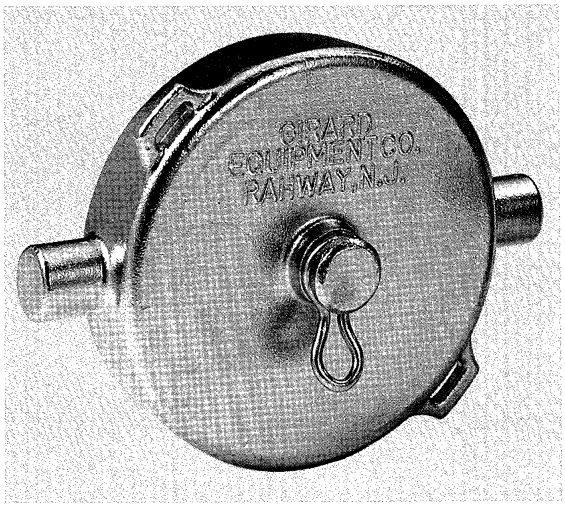

® Teflon is a Registered Trademark of Dupont.

Girard PARTS AND ACCESSORIES

Reducer

The Girard reducer had long been known for it's usefulness and durability. The 3"x2" stainless steel reducer is universally accepted as the standard fitting to reduce from 3" NPT male thread down to 2" NPT male thread.

SIZE	STAINLESS STEEL*	ALUMINMUM	MALLEABLE IRON
3" x 2"	3x2S	3x2A	3x2M
4" x 3"	4x3S	4x3A	N/A

**Teflon® Gaskets are supplied as standard.*

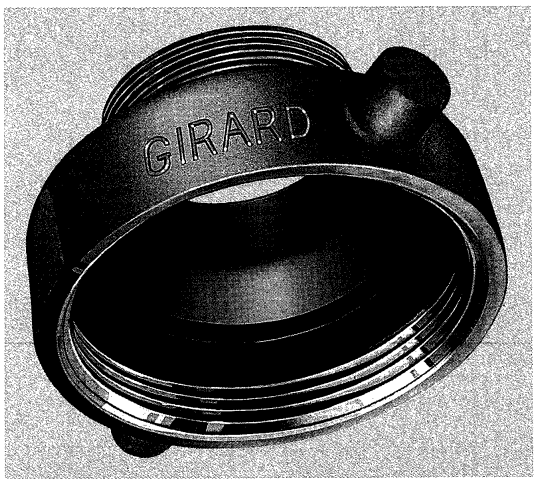

3" x 3" Adapter

This heavy duty adapter can be used to restore 3" NPT (tapered) nipples like those found on a tank trailers clean-out nipples, nose lines, and valve outlets that have damaged due to "cross threading". Also, threads that are galled, out of round or partially stripped can be renewed without the need for costly work to the trailer. The female side of the adapter seals against a Teflon® gasket (supplied as standard) and the male side is a faced flat seat. The 3" x 3" adapter is also designed to accept a cone strainer sometimes used to protect the intake side of a cargo pump's intake line.

SIZE	STAINLESS STEEL*	ALUMINMUM	MALLEABLE IRON
3" x 3"	3x3S	P.O.R.	N/A

Universal Spanner Wrench

A light weight, universal spanner type wrench for pin lug fittings and pipe caps. Fits sizes: 3" and 4". Cast in malleable iron. *Part Number*: NSW.

® Teflon is a Registered Trademark of Dupont.

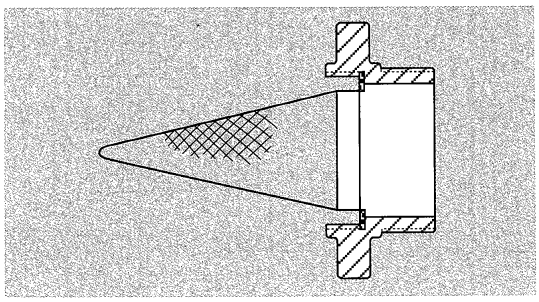

The 3 x 3" Adapter is used to hold Cone Strainer.

CONE STRAINER, DRUMMING NOZZLE and MULTI-PURPOSE WASHER

Stainless Steel Cone Strainer

Installs into a 3" opening (i.e. quick connect female, 3" x 3" adapter) and prevents large objects from entering the cargo pump's intake line. The cone-shaped design allows the strainer to be filled with 75% of material before restricting flow. Standard stainless steel screens are available in number 6 mesh. (number 50 and number 100 mesh screens are available upon request).

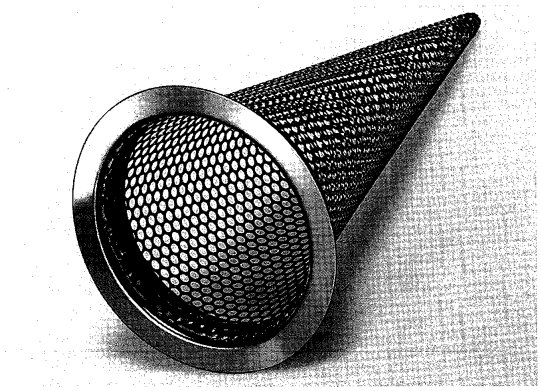

PART NUMBER	DESCRIPTION	MESH
3C6	3" Stainless Steel Cone Strainer	Number 6

Drumming Nozzle (*Not Shown*)

Whether filling drums, IBC containers, or tank trailers, the drumming nozzle is designed to work with every application. Even under pressure Girard Drumming Nozzles are made to be easily opened and closed. Available in strainless steel, polypropylene and aluminum. A 2" male quick connect adapter is used as the standard connection.

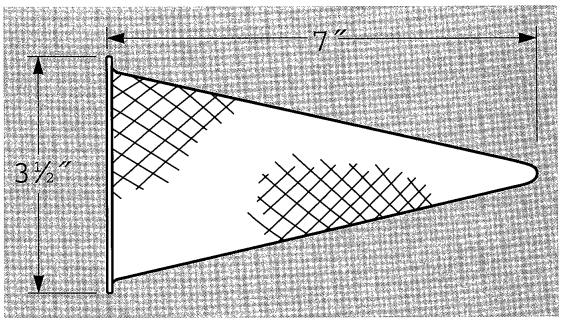

SIZE	STAINLESS STEEL	ALUMINMUM	POLYPROPYLENE
2"	2 SDN	2 SDN	2 PDN

Multi-Purpose Washer

This Stainless Steel/Bronze Washer was originally made to be used on tank trailer "clean out" nipples. It can also be used to clean IBC containers, tank containers and 55 gallon drums. The stainless steel/bronze design works well with most cleaning agents including caustic. Spray eminates from ten stainless steel jets. The spinner head rotates 360 degrees to cover all surfaces of the container you are cleaning. The washer is very durable and completely rebuildable. Standard connection is through a 1½" quick connect fitting (s/s)

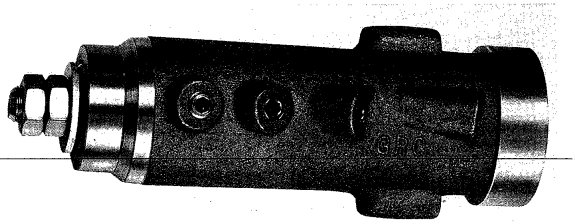

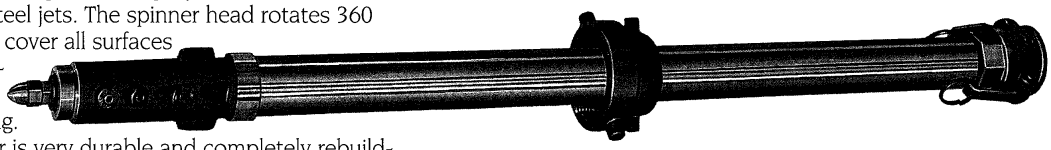

PART NUMBER	DESCRIPTION
TTW	Stainless steel washer with bronze spinner head -1½" female quick connection fitting on inlet -adjustable compression adapter to adapt to height variances