STAACWall75® by STODDART® GROUP

Houses and Low Rise Multi Residential 75mm External Walls

DESIGN AND INSTALLATION GUIDE

STODDART® GROUP

CONTENTS

1. INTRODUCTION	3
2. COMPLIANCE WITH THE NATIONAL CONSTRUCTION CODE OF AUSTRALIA (NCC)	5
3. MATERIAL PROPERTIES	7
4. SYSTEM COMPONENTS	8
5. INSTALLATION OVERVIEW	10
6. COATING REQUIREMENTS	12
7. DESIGN RESPONSIBILITIES	13
8. EXTERNAL WALL DESIGN STEPS	13
9. STRUCTURAL DESIGN	14
10. FIRE RESISTANCE DESIGN	20
11. THERMAL DESIGN	21
12. SOUND TRANSMISSION & INSULATION	24
13. WEATHERPROOFING	26
14. DESIGN & DETAILING CONSIDERATIONS	27
15. DURABILITY	31
16. DELIVERY, STORAGE & HANDLING	33
17. CONSTRUCTION DETAILS	35
18. APPENDIX: REFERENCING CODES AND STANDARDS	59

CODEMARK Australia

CMI CERTIFICATION

Certificate CM40281

1. INTRODUCTION

STAAC Wall® is a cladding solution of Autoclaved Aerated Concrete designed as an external wall cladding system for residential, commercial or light industrial buildings.

STAAC WALL® systems can deliver exceptional advantages in terms of performance, quality, speed of install, and risk minimisation. STAAC WALL® is non-combustible and manufactured in Australia. AAC is a well-known building material for it's exceptional thermal performance. It is also light weight when compared with traditional masonry materials and provides a flat surface for quality render finishes on the exterior building shell.

75mm STAAC WALL® panel is reinforced with steel mesh in both directions. It has a standard width of 600mm. The available standard lengths are 2400, 2550, 2700, 2800, 2850, 3000 and 3300mm, making STAAC WALL® a robust and versatile system for residential construction. STAAC WALL® is commonly installed vertically for speedy construction. It can also be installed horizontally if required.

Section 2.2 provides a summary of performance conformances of 75mm STAAC WALL® for external wall application to NCC Volumes 1 and 2. It is aimed to ease the work load of Building Certifiers by clearly and transparently demonstrating how STAAC WALL® satisfies the performance requirements of the NCC through either Deemed-to-Satisfy provisions or performance solutions or the combination of both. Test reports by NATA accredited laboratories, expert evaluation statements and technical data are referenced in Section 2.1 and may be provided upon request.

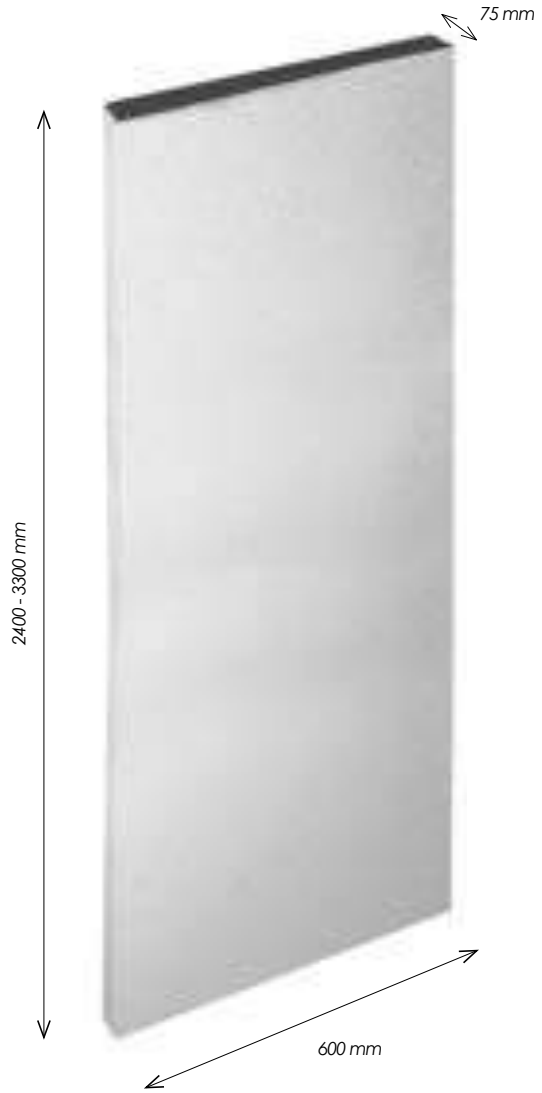

Typical home construction application

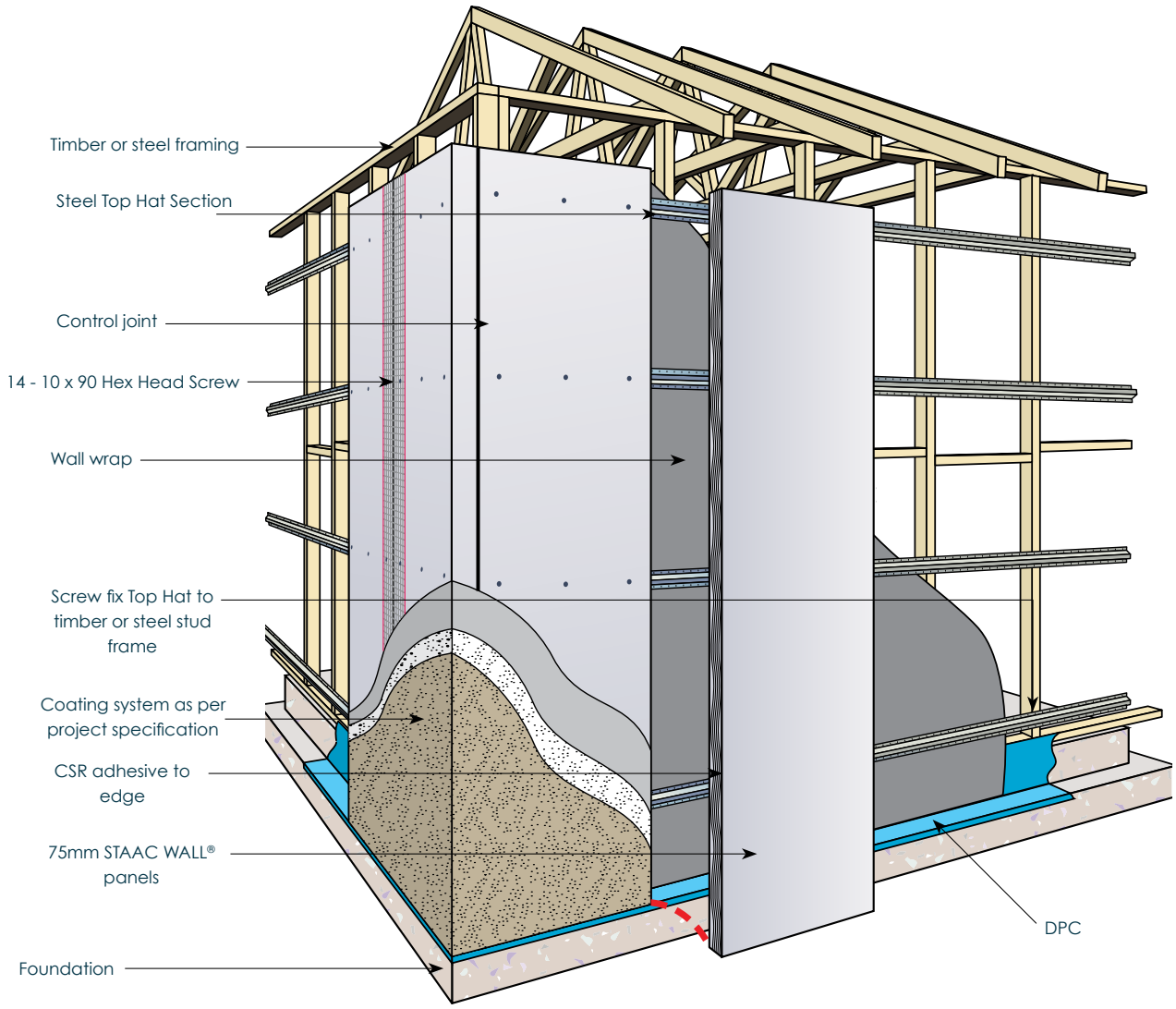

2. COMPLIANCE WITH THE NATIONAL CONSTRUCTION CODE OF AUSTRALIA (NCC)

All building solutions such as walls, floors, ceilings, etc., must comply with the regulations outlined in the NCC or other authority.

The NCC is a performance based document, and is available in two volumes which align with two groups of 'Class of Building':

- Volume 1 – Class 2 to Class 9 Buildings; and
- Volume 2 – Class 1 & Class 10 Buildings & Housing Provisions

Each volume presents regulatory performance requirements for different building solutions for various classes of buildings and performance provisions. These performance provisions include: structure, fire resistance, damp and weatherproofing, sound transmission & insulation, and energy efficiency.

This technical guide provides information necessary to assist in the design of a system incorporating 75mm STAAC WALL® that complies with the performance requirements of the NCC. The designer must check the adequacy of the building solution for performance requirements outlined by the appropriate authority.

2.1 COMPLIANCE WITH AS 5146 AAC STANDARDS

STAAC WALL® systems conform with the Australian Standards for Reinforced Autoclaved Aerated Concrete (AAC), AS 5146 Part 1 – Structures, Part 2 – Design and Part 3 - Construction. The standards are referenced in the Building Code of Australia making compliant AAC products Deemed-to-Satisfy (DTS) building materials. AS 5146.3 – Construction, Section 4 contains construction details for 75mm reinforced AAC external walls in houses and low rise multi-residential buildings. This provides the endorsement and confidence to regulatory and building certification bodies that the STAAC WALL® External Wall System is a NCC compliant construction system.

2.2 SUMMARY OF COMPLIANCE FOR 75MM EXTERNAL STAAC WALL®

75mm STAAC WALL® has been CodeMark® certified for external wall application. Table 2.1 and Table 2.2 below summarised the relevant clauses which 75mm STAAC WALL® complies with where applicable. Documents demonstrating evidence of suitability may be available upon request and are subject to commercial confidence.

Table 2.1 Summary of Compliance to NCC Volume 1

NCC 2022 VOL. 1			
	CLAUSE	APPLICATION	EVIDENCE OF SUITABILITY
PERFORMANCE REQUIREMENT(S)	B1P1(1) & (2)(a), (b), (c), (d)	Structural Provisions	Structural Provision A5G3(1)(e). Reports from Qualified Professional Engineer.
	F3P1	Damp and Weatherproofing	Weatherproofing A5G3(1)(e). Reports from Qualified Professional Engineer.
DEEMED-TO-SATISFY PROVISION(S)	C2D2(2)	Fire Resistance and Stability – FRL varies, dependant of the configuration of the wall.	Fire safety provision A5G3(1)(d)&(e). Reports from Accredited Testing Laboratories and Qualified Professional Engineer.
	C2D10	Non-combustible building elements	Compliance to Australian Standard AS 5146.1
	G5D3	Construction in bushfire prone areas	Fire Assessment - A5G3(1)(d) Reports from accredited test laboratories.
	J4D6	Energy Efficiency - Walls (Can be used in conjunction with other building elements to achieve a Total R-Value)	Thermal Performance - A5G3(1)(e). Reports from Professional Engineers.
	F8D3(1)(a)	Condensation Management - Pliable building membrane.	Compliance to Australian Standards AS 4200.1 & AS 4200.2

Table 2.2 Summary of Compliance to NCC Volume 2 & Housing Provisions

NCC 2022 VOL.2 & HOUSING PROVISIONS			
	CLAUSE	APPLICATION	EVIDENCE OF SUITABILITY
PERFORMANCE REQUIREMENT(S)	H1P1(1) & (2) (a), (b), (c), (d)	Structural Stability and Resistance to Actions	Structural Provision A5.2(1)(e). Reports from Qualified Professional Engineer
	H2P2	Weatherproofing	Weatherproofing A5.2(1)(e). Reports from Qualified Professional Engineer.
DEEMED-TO-SATISFY PROVISION(S)	H3D2	Fire hazard properties and non-combustible building elements	Compliance to Australian Standard AS 5146.1
	H3D3	FRL - Construction of external walls - FRL varies, dependant of the configuration of the wall.	Fire safety provision A5.2(1)(d) & (e). Reports from Accredited Testing Laboratories and Qualified Professional Engineer.
	H7D4(2)(a)	Construction in bushfire prone areas	Fire Assessment - A5G3(1)(d) Reports from accredited test laboratories.
	H6D2(1)(b)(i), H4D9(Tas.)	Energy Efficiency - External Walls. (Can be used in conjunction with other building elements to achieve a Total R-Value)	Thermal Performance - A5G3(1)(e). Reports from Professional Engineers.
	H4D9	Condensation Management - Pliable building membrane.	Compliance to Australian Standards. AS 4200.1 & AS 4200.2

2.3 OTHER RELEVANT TECHNICAL INFORMATION

Non-combustibility

STAAC WALL 75 – Autoclaved Aerated Concrete (AAC) panel had been tested for Combustibility for Materials in accordance with AS 1530.1:1994. The material is NOT deemed combustible - Limited to the panel only.

Source: CSIRO; NATA Accreditation No. 165; Report No. FNC12491; issued 22/11/2019.

3. MATERIAL PROPERTIES

Material Properties are determined in accordance with AS 5146 Parts 1 & 2 - Reinforced Autoclaved Aerated Concrete.

3.1 PHYSICAL PROPERTIES

- **Thickness:** 75mm, tolerance: ±1.5mm
- **Standard Width:** 600mm, tolerance: ±1.5mm
- **Standard Length:** 2400, 2550, 2700, 2800, 2850, 3000, 3300mm, tolerance: ±5mm
- **Edge Straightness Deviation (max.)**: ±1.5mm
- **Reinforcement:** 4 x 4mm longitudinal steel bars and 6-8 x 4mm diameter transverse steel bars per panel
- **Nominal Dry Density** = 400 kg/m^3
- **Average working density** = 540 kg/m^3 at 35% moisture content
- **Average service life density** = 440 kg/m^3 at 10% moisture content

3.2 STRENGTH PROPERTIES

- **Characteristic Compressive Strength of AAC**, f 'm= 2.38 MPa
- **Average Compressive Strength of AAC** = 2.8 MPa
- **Characteristic Modulus of Rupture, f 'ut** = 0.4 MPa

3.3 ACOUSTIC PROPERTIES

- **Panel only with no plasterboard or other lining:** Rw = 34dB, Rw+Ctr = 30dB.
  (Reference: Acoustic Logic Report 2010861.15/2602A/R2 GW)

3.4 THERMAL PROPERTIES

- **R-Value of 75mm STAAC WALL® panel with no plasterboard or other lining** = 0.6m^2.K/W
  (10% moisture content)

3.5 CUTTING

Panels typically should not be less than 270mm wide. Panels typically should not be less than 270mm wide. Where narrower panels are used, these panels must not be less than 100mm in width and must be installed between full width panels. Reinforced fibreglass mesh to be embedded in base levelling coat across the full width of the narrower panel. In cases where a panel as narrow as 100mm in width is to be installed on its own i.e such as between two adjacent window or door openings, then this installation method is deemed acceptable provided that this narrow panel can be cut, handled and installed without the panel cracking or becoming damaged (damaged or cracked panels must be discarded). Reinforced fibreglass mesh must also be embedded in a base levelling coat across the full width of this narrow panel. In all cases, the requirements for 'cut' panel joins and supports must be in accordance with the requirements of this manual.

4. SYSTEM COMPONENTS

The 75mm STAAC WALL® External Wall System is a complete system.

<table>
<tr><th>PRODUCT</th><th>DESCRIPTION</th><th>DIAGRAM</th></tr>
<tr><td>75mm STAAC WALL®</td><td>
<table>
<tr><th>Length (mm)</th><th>Mass (kg)</th></tr>
<tr><td>2400</td><td>58</td></tr>
<tr><td>2550</td><td>62</td></tr>
<tr><td>2700</td><td>66</td></tr>
<tr><td>2800</td><td>68</td></tr>
<tr><td>2850</td><td>69</td></tr>
<tr><td>3000</td><td>73</td></tr>
<tr><td>3300</td><td>80</td></tr>
</table>
Standard width: 600mm
</td><td> </td></tr>
<tr><td>Steel Battens</td><td>Perforated steel hat battens in 24mm and 35mm depth to provide immediate support to STAAC WALL® panels.</td><td> 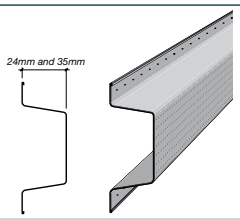
</td></tr>
<tr><td rowspan="3">Fasteners & Fixings</td><td>Internal fixing of top hat to timber stud frame; 12-11x35mm hex head type 17 screw.</td><td> </td></tr>
<tr><td>Fixing of top hat to steel framing; 10-16x16mm hex head self drilling screw.</td><td> </td></tr>
<tr><td>Fixing of STAAC WALL® panels to wall batten from batten side (fixing from inside of building) 14-10x65mm hex head type 17 screw
Fixing of STAAC WALL® panels to wall batten from panel side (fixing from outside of building) 14-10x90mm hex head type 17 screw</td><td> </td></tr>
<tr><td>24mm & 35mm Batten Direct Fixing Clip</td><td>For supporting battens in constrained space</td><td> </td></tr>
</table>

PRODUCT	DESCRIPTION
HEBEL® Mortar	Mortar (supplied in 20kg bags) when required Is used as a thick bed mortar base to provide a level base for STAAC WALL® installation as well as providing acoustic and fire protection at the base of the panels.
HEBEL® Adhesive	CSR Adhesive (supplied in 20kg bags) is used for gluing the STAAC WALL® panels together at vertical and horizontal joints.
HEBEL® Patch	Minor chips or damage to STAAC WALL® panels are to be repaired using Patch (supplied in 10kg bags).
HEBEL® Anti-Corrosion Protection Paint	To coat exposed reinforcement during cutting.
Backing Rod	Backing rod is used to enable correct filling of joints with sealant. The backing rod must be of open cell type to enable sealant to cure from behind. The diameter of backing rod must be appropriate for the width of the gap being filled.

4.1 TOOLS & EQUIPMENT

The basic tools required to install the STAAC WALL® System are:

- **Stirrer** – fitted to an electric drill, the stirrer is used to mix the mortar/adhesive/render inside a mixing bucket.
- **Notched trowel** – the notched trowel is used to apply adhesive to the panel surfaces. The width of the trowel must match the panel thickness to ensure the adhesive is applied with full and even coverage.
- **Panel lifters** – used to carry the panels around the work site.
- **Sand float** – used to remove excess adhesive and smooth joints between panels.
- **Levelling plane** – used to even out inconsistencies in the panels.
- **Power drill with clutch control**
- **Power saw with diamond tipped cutting blades**
- **Dust extraction system** – that complies with class M or H requirement of AS/NZS 60335.2.69
- **Power operated screw gun**
- **Sockets for screws**
- **Personal Protective Equipment (PPE)** – such as goggles, ear muffs/plugs and fit tested face mask are a mandatory requirement when cutting STAAC WALL® panels.

5. INSTALLATION OVERVIEW

STAGE	INSTALLATION STEPS	DIAGRAM
1	**COMPLETE FRAMES AND TRUSSES** ▶ Check readiness for installation, e.g. window reveals, fascia offset position	
2	**DAMP PROOF COURSE (DPC)** ▶ Fix DPC to bottom plate of frame ▶ Cover rebate completely ▶ Overlap DPC at corners	
3	**WALL WRAP** ▶ Install wallwrap as per manufacturer's instructions, ensuring it overlaps DPC at base	
4	**BATTEN INSTALLATION** ▶ Check control joint layouts for installation of discontinuous top hats ▶ Check the number of top hats and screws required (refer to Tables 9.1 to 9.6) ▶ Use packers and pack top hat to string line where required, screw to frame ▶ Check with a straight edge/spirit level that top hats are plumb ▶ Install top hats above and below openings	
5	**CUTTING PANELS** ▶ Cut panels to size ▶ Ensure any exposed steel reinforcing has been coated with anticorrosion paint	

STAGE	INSTALLATION STEPS	DIAGRAM
6	**ADHESIVE** ▶ Mix adhesive according to manufacturer's specification ▶ Apply CSR adhesive to entire edge of panel with notched trowel	 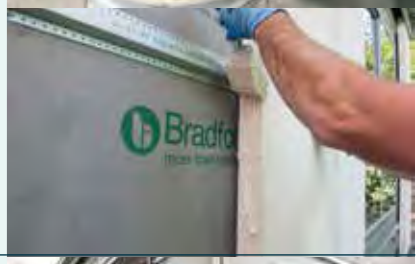
7	**STAAC WALL® PANEL INSTALLATION** ▶ Fix panel to top hats (refer to Tables 9.1 - 9.6) ▶ Corner panel to be installed first, lift into place using panel lifters ▶ Check panel is straight and level ▶ Continue installation by lifting panels into position ▶ Butt panel tightly to adjoining panel, screwing off as you go ▶ Adhesive should slightly ooze from the joint ▶ Once the joint adhesive is semi hard it can be cleaned up with a pallet knife, ensuring adhesive is flush with the panel face ▶ Patch holes and minor panel damage	
8	**CONTROL JOINT** ▶ Check vertical control joint layout ▶ Install backing rod into control joint at the required depth ▶ Check horizontal control joint layout ▶ Install packer and backing rod ▶ Apply suitable sealant to control joint ▶ Clean up any excess sealant ensuring it does not adhere to panel face	
9	**FINISH WALL** ▶ Trim off excess DPC ▶ Lightly sand and prepare surface ready for acrylic coating	

6. COATING REQUIREMENTS

75mm STAAC WALL® panels require an appropriate external coating system and sealant detailing to ensure a water resistant and vapour permeable building envelope is achieved.

Generally, the external face of the 75mm STAAC WALL® panel is coated with a high build acrylic levelling and finishing system, applied in accordance with the recommendations of the coating manufacturer.

6.1 PERFORMANCE REQUIREMENTS

The following performance requirements indicate that a specific fit-for purpose coating system must be adopted, and that a simple paint coating would most likely be an inadequate coating system. Variations to the coating system must be approved and warranted by the coating system manufacturer.

Surface Adhesion:

The substrate preparation and coating application should be in accordance with the coating manufacturer's specification.

Before applying finishes in coastal areas, all STAAC WALL® panels must be thoroughly washed with fresh water to remove any salt residue.

Water Resistance:

The primary objective of the coating system is to prevent water ingress, yet allow water vapour transmission both in and out of the AAC substrate.

Proven water resistance capability: Transmission: <10 grams/m^2/24hr at the nominated minimum coating dry film thickness.

Compatibility:

Ensure the coating system is compatible with the AAC substrate and construction system components, i.e:

- Coatings may not adhere to silicone or other sealants and mastics.
- Excessive joint adhesive or mortar smears across the panel face may require removal or the use of specific primers.

Durability:

The coating must be durable and should not overly deteriorate with exposure to light (UV) and weather for the life of the coating system manufacturer's warranty.

Coating Elasticity:

- The coating system must be able to bridge a 1mm minimum crack width.
- The coating system manufacturer can specify the minimum design specification (thickness), so that the coating is serviceable and durable.

Surface Preparation:

Clean, patch and remove any dags. Ensure that the surface is free of all incompatible materials, such as silicone sealants. If subject to sea spay or within 1 km of a surf coast, wash with clean fresh water to remove all traces of salt.

Maintenance:

All external coating systems and sealants/caulking should be cleaned and maintained on a regular basis. Please refer to Section 15. Contact reputable coating manufacturers for their current coating maintenance guide.

7. DESIGN RESPONSIBILITIES

The STAAC WALL® External Wall System has been developed based upon numerous tests and assessments by design consultants.

Tests were conducted at NATA accredited testing laboratories. Reports were issued to document the performance of the wall in accordance with the relevant Australian Standards. Consultants were engaged to provide their professional opinions based on the information in these reports (estimates of laboratory performance). The performance levels of walls documented in this guide are either what is reported in a test or the documented opinion of consultants.

Performance in projects is typically the responsibility of design consultants, builders and certifiers. Any party using the information contained in this guide or supplied by STAAC WALL® in the course of a project must satisfy themselves that it is true, current and appropriate for the intended application, consequently accepting responsibility for its use. It is the responsibility of the architectural designer and engineering parties to ensure that the details in this design guide are appropriate for the intended application. The recommendations in this guide are formulated along the lines of good building practice, but are not intended to be an exhaustive statement of all relevant data. The confirmation of wind category for the appropriate use of the design tables in Section 9 must be given by a qualified design engineer.

8. EXTERNAL WALL DESIGN STEPS

Follow the simple steps below to design 75mm STAAC WALL® efficiently for external wall application.

1	Establish building wind class, support framing layout and what panel length is most suitable for the building.
2	**a.** Confirm Fire Resistance Level (Commonly minimum 60mins FRL is required for external walls of a residential dwelling) **b.** Confirm thermal performance requirement in terms of R-value **c.** Confirm acoustic performance requirement in terms of Rw value
3	Confirm support batten spacing and fastener specification using Tables 9.1 - 9.6 for structural performance.
4	Refer to Table 11.2 and Table 11.3 to select insulation and wall wrap material specification to suit thermal and condensation management requirements.
5	Document and confirm design selection for building approval / certification

9. STRUCTURAL DESIGN

The external wall system consists of 75mm STAAC WALL® panels fixed to the support structure with steel top hat battens.

Top Hat batten spacings are based on common wall frame with 450 and 600mm stud spacing and wind classification for housing to AS4055. Table 9.1 to Table 9.6 are suitable for 75mm STAAC WALL® supported by 24mm and 35mm perforated top hat battens. Minimum performance requirements for the metal studs, steel battens, fixings and STAAC WALL® have been provided in this section. The support framing which the STAAC WALL® panels and steel battens are fixed onto is assumed to have adequate structural integrity to transfer the loads including but not limited to wind load and the self weight of the STAAC WALL® system to the foundation.

9.1 DESIGN ASSUMPTIONS

The design and installation of the STAAC Wall 75® House & Low Rise Multi-Residential External Wall must be in accordance with batten specification in Section 9.3 of this design and install manual and the batten span, spacing, fixing, per AS 4055 Wind Category is specified in Tables 9.1, 9.2, 9.3, 9.4 & 9.5 of this manual. The design must include either: Timber stud framing must be designed and constructed in accordance with the AS 1684 series or AS 1720.1. Steel stud framing must be designed and constructed in accordance with "Cold-formed steel structures: AS/NZS 4600" or "Residential and low-rise steel framing: NASH Standard – Residential and Low-Rise Steel Framing, Part 1 or Part 2".

a. Support framing is adequate to support the weight of the STAAC WALL® panels and substructure.

b. The system is not considered as cavity construction, as the batten bridges the cavity, hence the details show the necessity of sealing the windows and door frames, as well as applying a water-resistant external coating.

c. The localised effects of wind around corners of buildings have been considered in the design and included in the tables. The extent of this effect is discussed towards the end of this section.

9.1.1 Design Procedure

Design procedures for the verification of wall systems consisting of STAAC WALL® Autoclaved Aerated Concrete (AAC) panels generally follow the design principles detailed in Australian Standard AS 5146.1: 2015 – Reinforced Autoclaved Aerated Concrete Part 1: Structures (Incorporating Amendment No.1), AS 5146.2: 2018 – Reinforced Autoclaved Aerated Concrete Part 2: Design for strength and serviceability requirements and AS5146.3 - Reinforced Autoclaved Aerated Concrete Part 3: Construction.

The serviceability design of the STAAC WALL® panels complies with AS5146.2: 2018. The load carrying capacity of the STAAC WALL® panel is influenced by several factors, such as:

- Wind load
- Support frame stiffness
- Wall height
- Batten spacing and layout
- Fastener quantity and location

9.1.2 Criteria for Corner Panels

Due to the increase of wind load around the corners of buildings, extra top hats and screws may be necessary (N3) for a distance of 1200mm in each direction from the corner. Tables 9.1 - 9.5 identify the installation criteria in these areas in the columns titled 'Panel Location – Corner'.

It is important to consider the changes that may occur during the design life of the building. For instance, when a row of individually titled terrace houses are constructed on a zero lot boundary, the zero lot boundary walls between 2 houses may need to be considered for corner effects if there is a possibility for the adjacent house to be removed during the life of the house.

9.1.3 Earthquake Loads

Earthquake loading has not been considered in this design guide. Consult a qualified design engineer for design of AAC panel for earthquake loading.

9.2 SUPPORT WALL FRAMING

Steel stud frames must be designed and constructed in accordance with NASH standards & handbooks and AS/NZS 4600. Timber stud frames must be designed and constructed in accordance with AS 1684. The support framing system must have adequate structural integrity to support AAC panels, this includes but is not limited to lintel structures to support wall panels over an opening or at a cantilevered wall.

9.3 SUPPORT BATTENS

24mm and 35mm perforated top hat type battens are used to provide immediate support for STAAC WALL® panels. Batten requirements are in Tables 9.1 to 9.6.

The structural performance of the top hat batten complies with NASH standards and AS/NZS 4600.

Battens can be installed vertically onto studs with panels to span horizontally. Refer to table 3.3(G), 3.3(H) & 3.3(I) of AS 5146.3:2018.

TOP HAT BATTEN SPECIFICATION	24mm	35mm
OVERALL DEPTH	24mm	35mm
BASE MATERIAL THICKNESS BMT:	0.42mm	0.55mm
STEEL GRADE:	G550	Galvabond fy = 270mPa
COATING CLASS:	AM150	Z275

9.4 BATTEN AND FIXING SELECTIONS

The tables below provide the required rows of battens for different panel heights for different wind categories.

Table 9.1 Number of support battens for panel supported at base

WIND CLASSIFICATION	ULTIMATE WIND PRESSURE (kPa)		STUD SPACING (mm)	NUMBER OF TOP HATS PER PANEL							
				PANEL LENGTH (mm)							
				≤ 2400		≤ 2700		≤ 3000		≤ 3300	
				PANEL LOCATION		PANEL LOCATION		PANEL LOCATION		PANEL LOCATION	
	AWAY FROM CORNERS	WITHIN 1200mm OF CORNERS		TYPICAL	CORNER	TYPICAL	CORNER	TYPICAL	CORNER	TYPICAL	CORNER
N2	0.67/-0.62	-1.25	600	3	3	3	3	4	4	4	4
N3	1.05/-0.98	-1.95	600	3	4	3	4	4	4*	4	5
N3	1.05/-0.98	-1.95	450	3	3	3	3	4	4	4	4

NOTE: *One additional top hat is required when CSR Direct Fix Clips are used to support top hats.

Table 9.2 Number of screws per panel at each top hat location - panel supported at base

WIND CLASSIFICATION	ULTIMATE WIND PRESSURE (kPa)		STUD SPACING (mm)	NUMBER OF SCREWS PER PANEL PER BATTEN			
				PANEL LOCATION			
				TYPICAL		CORNER	
	AWAY FROM CORNERS	WITHIN 1200mm OF CORNERS		END	MIDDLE	END	MIDDLE
N2	0.67/-0.62	-1.25	600	2	2	2	2
N3	1.05/-0.98	-1.95	600	2	3	2	3
N3	1.05/-0.98	-1.95	450	2	2	2	3

NOTE:
1. Negative wind pressure (-); Positive wind pressure (+). Negative pressure is acting away from the panel and positive pressure is acting towards the panel.
2. All battens to be spaced equally, with top and bottom battens positioned at maximum 250mm from the end of the panel.
3. Corner panel location applies to panels within 1200mm of a building corner.
4. For intermediate panel lengths, use the design from the longer panels presented in Table 9.1.
5. "End" refers to the top and bottom rows of battens. "Middle" refers to rows of batten excluding the top and bottom row. Refer to Figure 17.3.3.

Table 9.3 Number of support battens for panel suspended from framing (e.g. multi-storey construction)

WIND CLASSIFICATION	ULTIMATE WIND PRESSURE (kPa)		STUD SPACING (mm)	NUMBER OF TOP HATS PER PANEL							
				PANEL LENGTH (mm)							
				≤ 2400		≤ 2700		≤ 3000		≤ 3300	
				PANEL LOCATION		PANEL LOCATION		PANEL LOCATION		PANEL LOCATION	
	AWAY FROM CORNERS	WITHIN 1200mm OF CORNERS		TYPICAL	CORNER	TYPICAL	CORNER	TYPICAL	CORNER	TYPICAL	CORNER
N2	0.67/-0.62	-1.25	600	4	4	4	4	4	4	4	4
N3	1.05/-0.98	-1.95	600	4	4	4	4	4	4	4	4*
N3	1.05/-0.98	-1.95	450	4	4	4	4	4	4	4	4

NOTE: *One additional top hat is required when CSR Direct Fix Clips are used to support top hats.

Table 9.4 Number of screws per panel at each wall batten location - panel suspended from framing (e.g. multi-storey construction)

WIND CLASSIFICATION	ULTIMATE WIND PRESSURE (kPa)		STUD SPACING (mm)	NUMBER OF SCREWS PER PANEL PER BATTEN			
				PANEL LOCATION			
				TYPICAL		CORNER	
	AWAY FROM CORNERS	WITHIN 1200mm OF CORNERS		END	MIDDLE	END	MIDDLE
N2	0.67/-0.62	-1.25	600	2	2	2	3
N3	1.05/-0.98	-1.95	600	2	3	3	4
N3	1.05/-0.98	-1.95	450	2	3	3	4

Table 9.5 Number of screws per panel at each wall batten location & batten spacing for panel suspended at gable ends

WIND CLASSIFICATION	ULTIMATE WIND PRESSURE (kPa)		STUD SPACING (mm)	NUMBER OF SCREWS PER PANEL PER TOP HAT		MAXIMUM SPACING OF TOP HAT (mm)	
				PANEL LOCATION			
	AWAY FROM CORNERS	WITHIN 1200mm OF CORNERS		TYPICAL	CORNER	TYPICAL	CORNER
N2	0.67/-0.62	-1.25	600	2	3	800	750
N3	1.05/-0.98	-1.95	600	3	4	800	600
N3	1.05/-0.98	-1.95	450	3	4	800	650

Table 9.6 Number of support battens per panel - drop edge beam fixing

WIND CLASSIFICATION	ULTIMATE WIND PRESSURE (kPa)		STUD SPACING (mm)	MAXIMUM TOP HAT SPACING							
				PANEL LENGTH (mm)							
				≤ 2400		≤ 2700		≤ 3000		≤ 3300	
				PANEL LOCATION		PANEL LOCATION		PANEL LOCATION		PANEL LOCATION	
	AWAY FROM CORNERS	WITHIN 1200mm OF CORNERS		TYPICAL	CORNER	TYPICAL	CORNER	TYPICAL	CORNER	TYPICAL	CORNER
N2	0.67/-0.62	-1.25	600	900	600	900	600	900	600	900	600
N3	1.05/-0.98	-1.95	600	900	600	900	600	900	450	900	600
N3	1.05/-0.98	-1.95	450	900	450	900	450	900	450	900	450

NOTE:
1. Maximum overhang of batten to be 150mm.
2. Minimum concrete grade is 25MPa
3. Ramset Ramplug DNP08 to be used to fix the top hats to the concrete drop edge beam. Screw selection and installation of fixings must be in accordance with manufacturer's requirements.
4. Refer to Table 9.2 for fixing requirement

GENERAL NOTES FOR TABLE 9.1 ~ TABLE 9.6:
1. Negative wind pressure (-); Positive wind pressure (+). Negative pressure is acting away from the panel and positive pressure is acting towards the panel.
2. All battens to be spaced equally, with top and bottom battens positioned at maximum 250mm from the end of the panel.
3. Corner panel location applies to panels within 1200mm of a building corners.
4. For intermediate panel lengths, use the design from the longer panels presented in Table 9.1 and Table 9.3.

9.5 FASTENER SPECIFICATION

The following table provide the recommended fastener type for steel and timber support. Fastener coating class to be minimum class 3 in accordance to AS3566.

Table 9.7 Screw Specification

TYPE OF SCREW	APPLICATION	SOCKET TYPE
12-11x35mm hex head type 17 screw	Fix wall batten to timber frame	5/16" hex mag. socket
10-16x16mm hex head Self-drilling screw	Fix wall batten to steel stud frame (1.2mm BMT max.)	5/16" hex mag. socket
14-10x65mm hex head type 17 screw	Fix STAAC WALL® panel to wall batten from inside of building (zero boundary wall application only)	3/8" hex mag. socket
14-10x90mm hex head type 17 screw	Fix STAAC WALL® panel to wall batten from outside of building	3/8" hex mag. socket

NOTE:
1. Drive screw head min. 5mm into the panel and filled with CSR Adhesive.
2. Minimum screw embedment depth into timber support must be 25mm.

9.6 SUPPORT STRUCTURE REQUIREMENT

When 75mm STAAC WALL® panels are suspended from the stud frame and do not directly bear on the slab e.g. upper storey cantilevered wall, the project engineer must design the frame to support the weight of the suspended panels.

The use of 75mm STAAC WALL® in multi-storey construction involves a number of design issues that require consideration. In conjunction with the following, refer to Construction Details in Section 17.

9.6.1 Bracing Of The Building

The walls of the dwelling should be braced using steel cross bracing wherever possible to allow the fixing of the 75mm STAAC WALL® panels without the need for additional packing. Ply or sheet bracing should be used on the external wall if the walls are too short for the steel cross bracing (refer AS 1684 – non-cyclonic areas). In this case, the full length of the wall should be sheeted to prevent misalignment of the panels. For cold-formed steel framing, refer to NASH standard for bracing requirements. In the case where sheet bracing is required, the full width of the wall should be sheeted to assure STAAC WALL® panel alignment.

Alternatively, localised strips of the sheeting can be fixed to the intermediate studs between the areas of full sheet bracing to maintain the panel alignment. All fixing is only from the outside, except on zero boundary walls. The extent of the bracing should be determined by the frame designer or project engineer.

10. FIRE RESISTANCE DESIGN

10.1 OVERVIEW

The STAAC WALL® External Wall System may be subject to fire loading caused by an external or internal fire source. When the wall requires a fire resistance level (FRL) rating, several factors must be considered in the design stage. The FRL rating of the wall can be affected by the penetrations and the method adopted to protect these penetrations. For example, a fire collar with a –/60/60 FRL rating will govern the FRL of the wall, even if the wall configuration has a FRL rating of –/90/90. Where required, the performance of the external coating when subjected to a fire loading must meet the appropriate performance requirements outlined in the NCC. Joints and gaps need to be appropriately fire rated, e.g. vertical control joint will need fire rated sealant and horizontal joints must be blocked with non-compressible fire rated material.

10.1.1 Fire Sources

For an external fire source, the excellent fire resistance qualities of the STAAC WALL® External Wall System protects the structural support framing and provides a high fire resistance level. For an internal fire source, the studs must be protected by the internal wall linings. Refer to internal lining technical literature such as the CSR Gyprock Red Book™ for specifications.

10.1.2 Fire Safety Performance Requirement For External Walls

Where necessary the designer and builder must ensure the structural support framing, its connections and the STAAC WALL® installation are satisfactory when subject to fire conditions. The NCC Vol 2 & Housing Provisions outlines provisions for external walls for fire resistance in a residential building where an external wall is less than 900mm from an allotment boundary or 1.8m from another building on the same allotment. If this occurs an FRL of not less than 60/60/60 is required from the outside.

10.2 FIRE PERFORMANCE OF 75MM STAAC WALL®

The 75mm STAAC WALL® External Wall System can achieve a FRL of up to 180/180/180. Only the construction details identified in Construction Details section achieve a fire performance (See Figures 17.3.1, 17.3.2, 17.3.4, 17.4.6, 17.5.5, 17.5.7, 17.5.8, 17.6.1, 17.6.2, 17.6.5, 17.6.9, 17.6.10). Where other details are required to provide a fire performance or where a greater Fire Rating Level (FRL) is required, then seek design advice from a qualified fire engineer.

The STAAC WALL® wall system has been derived from CSIRO fire assessment report FCO-3003 for fire source from the STAAC WALL side and wall height up to 3300mm per level. 75mm STAAC WALL is suitable for walling applications at zero line allotment blocks and for external walls of multi-storey residential buildings.

10.3 BUSHFIRE ZONE REQUIREMENTS

The STAAC WALL® External Wall System had been tested for FRL performance in accordance to AS1530.4 that satisfied the construction requirements up to BAL - FZ as specified in Australian Standard AS3959. It is the responsibility of the building designer to ensure compliance to AS 3959 is achieved in accordance with the NCC, any state or territory or local government requirements.

10.4 DESIGN CONSIDERATIONS

10.4.1 Fire Stop Penetrations

Penetrations through STAAC WALL® to accommodate pipework, electrical cabling or ductwork will have to be protected (fire stop), to prevent the spread of fire through the penetration. The penetration can be protected with proprietary products such as:

- Fire rated sealants
- Fire collars and intumescent wraps
- Fire rated mortars
- Fire rated pillows
- Fire rated switch boxes

STAAC WALL® recommends contacting the manufacturer to obtain the appropriate product/solution and installation method for the application and wall configuration.

11. THERMAL DESIGN

Several international comparative studies have been conducted to investigate the benefits of incorporating AAC walls in place of conventional wall systems.

A common trend was the lower heating and cooling energy consumption and smaller mechanical equipment required to maintain a comfortable living environment, especially with regards to regions of mainly cold weather. The excellent performance is the result of three characteristics – thermal mass, thermal insulation and the air tightness of the construction.

The total R-Value of a wall assembly is provided by the amount of insulation in the wall. Higher total R-Value will require more insulation. STAAC WALL® External Wall System incorporating the recommended insulation can provide the R-Value ratings outlined in Table 11.2 and 11.3.

11.1 INSULATION

It is recommended that insulation materials be installed to enhance thermal insulation properties and occupant comfort. Insulation also improves the acoustic performance of the wall against outside noise.

The NCC provides Deemed-to-Satisfy Provisions for compliance and installation of the various types of insulation. The insulation should be installed with STAAC WALL® such that it forms a continuous barrier to contribute to the thermal barrier. All insulation installed in STAAC WALL® External Wall systems must comply with: AS/NZS 4859.1.

11.2 AIR TIGHTNESS

The thermal performance can be influenced by many factors. Most of these are related to the design decisions and properties of the adopted materials. Poor construction practices can significantly affect the thermal performance resulting in drafts. The tight construction tolerances of AAC provide a wall with low air infiltration rate. Testing at the CSIRO (Test Report DTM327) on AAC blockwork with thin bed adhesive joints has determined an air infiltration rate of 0.3L/s (0.014% of internal volume). For STAAC WALL® panels having fewer thin bed adhesive joints, a rate less than this may be achieved.

11.3 WALL WRAP (SARKING)

The design of the sarking arrangement can be complex and we highly recommend that condensation management should be confirmed by the appropriate project design consultant. To satisfy minimum performance requirement, Pliable building membrane commonly known as sarking or wall wrap when installed in an external wall must complies with AS 4200.1:2017 for material performance requirement and must be installed in accordance with AS 4200.2:2017. For climate zones 4, 5, 6, 7 and 8 as defined in NCC 2022 Vol. 1 Clause F8D3 & Housing Provisions Clause 10.8.1, the pliable building membrane must be a vapour permeable membrane. It must be located on the exterior side of the primary insulation layer of wall assemblies that form the external envelope of a building.

Table 11.1 Guidance on wall wrap/sarking

PERFORMANCE CRITERIA	GUIDANCE ON WALL WRAP / SARKING	RECOMMENDED WALL WRAP / SARKING	REFLECTIVE OR NON-REFLECTIVE
Vapour Permeable	Vapour permeable products are not recommended for use in tropical climate zones.	Enviroseal ProctorWrap RW	Non-reflective

The following tables show the performance levels required for walls as per NCC and the thermal performance of the STAAC WALL® External Wall System.

Table 11.2 Thermal performance of 75mm STAAC WALL® external wall system - timber stud frame

DESCRIPTION						TOTAL R-VALUE m².K/W	
PLASTERBOARD	STUD FRAME	BATTS	WALL WRAP	TOPHAT CAVITY	AAC	SUMMER	WINTER
10mm Plasterboard	70mm Timber Stud Frame	70mm Bradford Soundscreen R2.0 Batts	Thermoseal Wall Wrap XP	24mm	75mm STAAC WALL® Panel	3.03	3.15
		70mm Bradford Soundscreen R2.0 Batts	Enviroseal ProctorWrop RW			2.68	2.79
		70mm Bradford Soundscreen R2.0 Batts	Thermoseol Wall Wrap XP	35mm		3.03	3.15
		70mm Bradford Soundscreen R2.0 Batts	Enviroseal ProctorWrap RW			2.68	2.79
	90mm Timber Stud Frame	90mm Bradford Gold Wall Batts R2.0	Thermoseol Wall Wrap XP	24mm		3.07	3.23
		90mm Bradford Gold Wall Batts R2.5	Enviroseal ProctorWrap RW			3.09	3.24
		90mm Bradford Polymax Wall Batts R2.5	Enviroseal ProctorWrap RW			3.09	3.24
		90mm Bradford Gold Wall Batts R2.7	Enviroseal ProctorWrap RW			3.23	3.37
		90mm Bradford Gold Wall Batts R2.0	Thermoseal Wall Wrap XP	35mm		3.07	3.23
		90mm Bradford Gold Wall Batts R2.5	Enviroseal ProctorWrap RW			3.09	3.24
		90mm Bradford Polymax Wall Batts R2.5	Enviroseal ProctorWrap RW			3.09	3.24
		90mm Bradford Gold Wall Batts R2.7	Enviroseal ProctorWrop RW			3.23	3.37

NOTE:

1. Refer to NCC for state and territory variations.
2. The Total R-values provided in this table have been evaluated based on the properties of the specified components. Products with similar or equivalent properties may achieve the same performance. Consult product manufacturer for substitution recommendation and evidence of conformity.
3. Refer to NCC for alternative means of satisfying the required performance levels.
4. Refer to manufacturer's product literature for design & installation requirements on wall wrap/ sarking and insulation.
5. Stated R-values have been provided by J. Fricker in report i107e dated 29/04/2024.
6. Stated R-values include a 6mm skim render.

Table 11.3 Thermal performance of 75mm STAAC WALL® external wall system - steel stud frame

DESCRIPTION						TOTAL R-VALUE $m^2.K/W$	
PLASTERBOARD	STUD FRAME	BATTS	WALL WRAP	TOPHAT CAVITY	AAC	SUMMER	WINTER
10mm Plasterboard	64mm Steel Stud Frame	70mm Bradford Soundscreen R2.0 Batts	Thermoseal Wall Wrap XP	24mm	75mm STAAC WALL® Panel	2.97	3.03
		70mm Bradford Soundscreen R2.0 Batts	Enviroseal ProctorWrop RW			2.54	2.65
		70mm Bradford Soundscreen R2.0 Batts	Thermoseol Wall Wrap XP	35mm		2.91	3.03
		70mm Bradford Soundscreen R2.0 Batts	Enviroseal ProctorWrap RW			2.54	2.65
		90mm Bradford Gold Wall Batts R2.0	Thermoseol Wall Wrap XP	24mm		3.02	3.18
		90mm Bradford Gold Wall Batts R2.5	Enviroseal ProctorWrap RW			3.02	3.17
	92mm Steel Stud Frame	90mm Bradford Polymax Wall Batts R2.5	Enviroseal ProctorWrap RW			3.02	3.17
		90mm Bradford Gold Wall Batts R2.7	Enviroseal ProctorWrap RW			3.16	3.31
		90mm Bradford Gold Wall Batts R2.0	Thermoseal Wall Wrap XP	35mm		3.02	3.18
		90mm Bradford Gold Wall Batts R2.5	Enviroseal ProctorWrap RW			3.02	3.17
		90mm Bradford Polymax Wall Batts R2.5	Enviroseal ProctorWrap RW			3.02	3.17
		90mm Bradford Gold Wall Batts R2.7	Enviroseal ProctorWrop RW			3.16	3.31

NOTE:

1. Refer to NCC for state and territory variations.
2. The Total R-values provided in this table have been evaluated based on the properties of the specified components. Products with similar or equivalent properties may achieve the same performance. Consult product manufacturer for substitution recommendation and evidence of conformity.
3. Refer to NCC for alternative means of satisfying the required performance levels.
4. Refer to manufacturer's product literature for design & installation requirements on wall wrap/ sarking and insulation.
5. Stated R-values have been provided by J. Fricker in report i107e dated 29/04/2024.
6. Stated R-values include a 6mm skim render.

12. SOUND TRANSMISSION & INSULATION

12.1 CURRENT NCC SOUND TRANSMISSION AND INSULATION REQUIREMENTS

The 75mm STAAC WALL® External Wall System is primarily used in buildings that have a domestic type of activity purpose. The NCC generally classifies these buildings into Class 1 or 10. The acoustic performance requirements for external walls in these buildings or their building elements are not currently stated in the NCC, but may be set by the relevant authorities (i.e. local councils, client specific requirements, etc).

12.1.1 Design recommendations

Acoustic design is a complex science and there will be instances where a specialist acoustic consultant is required. For walls required to meet acoustic performance, it is recommended to:

1. Engage a reputable acoustic consultant on a project-by-project basis to provide design advice and installation inspections
2. When selecting the appropriate components for the 75mm STAAC WALL® External Wall System, the designer or specifier must be aware that the laboratory Rw values are almost always higher than the field measured values. Therefore, allowances should be made for the lower expected field values during the selection of the system
3. Separate advice from a specialist acoustic consultant should be sought to determine the effect on acoustic performance due to any changes to the 75mm STAAC WALL® External Wall System, and any required modification of the installation details pertaining to the systems
4. Increasing cavity widths, using higher density or thicker insulation or plasterboard, will generally maintain or increase the acoustic performance of the 75mm STAAC WALL® External Wall System.
5. The acoustic performance values provided in Tables 12.1 and 12.2 are the results of an acoustic analysis and assessment, Ref: 20140366.34/1909A/R3/GW, 19/09/2017)

Table 12.1 : Acoustic performance of 75mm STAAC WALL® external wall system - timber frame

DESCRIPTION					ACOUSTIC	
PLASTERBOARD	STUD FRAME	BATTS	TOPHAT CAVITY	AAC	RW	RW + CTR
10mm Plasterboard	70mm Timber Stud Frame	None	24mm	75mm STAAC WALL® Panel	38	23
		70mm Bradford Soundscreen R2.0 Batts			40	25
		70mm Bradford Soundscreen R2.0 Batts			40	25
		None	35mm		38	23
		70mm Bradford Soundscreen R2.0 Batts			41	26
		70mm Bradford Soundscreen R2.0 Batts			41	26
	90mm Timber Stud Frame	None	24mm		38	23
		90mm Bradford Gold Wall Batts R2.0			41	26
		90mm Bradford Gold Wall Batts R2.5			41	26
		90mm Bradford Gold Wall Batts R2.7			41	26
		None	35mm		38	23
		90mm Bradford Gold Wall Batts R2.0			42	27
		90mm Bradford Gold Wall Batts R2.5			42	27
		90mm Bradford Gold Wall Batts R2.7			42	27

Table 12.2 : Acoustic performance of 75mm STAAC WALL® external wall system - steel frame

DESCRIPTION					ACOUSTIC	
PLASTERBOARD	STUD FRAME	BATTS	TOPHAT CAVITY	AAC	RW	RW + CTR
10mm Plasterboard	64mm Steel Stud Frame	None	24mm	75mm STAAC WALL® Panel	40	30
		70mm Bradford Soundscreen R2.0 Batts			43	32
		70mm Bradford Soundscreen R2.0 Batts			43	32
		None	35mm		40	31
		70mm Bradford Soundscreen R2.0 Batts			44	33
		70mm Bradford Soundscreen R2.0 Batts			44	33
	92mm Steel Stud Frame	None	24mm		40	31
		90mm Bradford Gold Wall Batts R2.0			44	33
		90mm Bradford Gold Wall Batts R2.5			44	33
		90mm Bradford Gold Wall Batts R2.7			44	33
		None	35mm		40	31
		90mm Bradford Gold Wall Batts R2.0			44	33
		90mm Bradford Gold Wall Batts R2.5			44	33
		90mm Bradford Gold Wall Batts R2.7			44	33

NOTE: Acoustic values in tables above are based on acoustic assessment 20140366.34/1909A/R3/GW.The acoustic values provided in these tables have been evaluated based on the properties of the specified components. Products with similar or equivalent properties may achieve the same performance. Consult product manufacturer for substitution recommendation and evidence of conformity.

13. WEATHERPROOFING

13.1 SEALANTS

All control joints must be sealed with a suitable external grade acoustic and/or fire rated paintable sealant. All gaps between the 75mm STAAC WALL® panels and framing around windows must be caulked with an appropriate external grade sealant.

NOTE:

1. Caulking should be applied prior to base coat with care taken not to cut the caulking during application of trowelled on render coating.
2. The sealant should be installed in accordance with the sealant manufacturer's specifications.

13.2 WALL FLASHINGS

In general, flashings must be designed and installed in accordance with SA HB 39: 2015 – Installation Code for Metal Roofing and Wall Cladding.

13.3 WALL WRAP

For 75mm STAAC WALL®, wall wrap is only required for insulation and condensation control as well as a corrosion barrier over CCA treated timber frames. Although not a mandatory requirement, the installation of wall wrap is considered good building practice. Wall wrap must be designed and installed in accordance with AS 4200.1 for materials and AS 4200.2 for installation.

Where wall wraps are installed on a timber stud frame, the timber must be dry to prevent mould, decay or rotting of timber.

13.4 WEATHERPROOFING COMPLIANCE TO NCC

The 75mm STAAC WALL® External Wall System has been tested (and results of the test assessed by AECOM) in accordance with the Verification Methods of NCC 2022, specifically the verification methods F3V1 for clause F3P1 (Volume 1) and H2V1 for clause H2P2 (Volume 2).

The results of this test demonstrate the 75mm STAAC WALL® External Wall System with adhesive applied at the panel joints and with a suitable acrylic coating system applied over the panel, will comply with the performance requirements of NCC 2022 for Wind Categories N1, N2 & N3, specifically the verification methods F3V1 for clauses F3P1 (Volume 1) and H2V1 for clause H2P2 (Volume 2).

13.5 ZERO BOUNDARY WALL SYSTEM

STAAC WALL® zero boundary walls are used when access is unavailable from outside. The design and installation of the zero boundary walls should be based on the information and details provided in this guide. See construction detail Figure 17.3.4.

On zero boundary wall applications where the external wall is up against another existing building, it is good practice to flash the top of the wall to the adjacent property to shelter the wall from external weather conditions. In cases where the zero boundary wall is higher than the wall on the adjacent property, the STAAC WALL® panel at the upper level is considered an external wall system and therefore should be coated as per the recommendations in this guide. For more details refer to Figures 17.5.7 and 17.5.8.

14. DESIGN & DETAILING CONSIDERATIONS

14.1 BUILDING SETOUT

The 75mm STAAC WALL® External Wall System is principally designed for modular construction. The full benefit of savings in time and cost will be fully realised when the construction is designed to suit a 300mm module. In principle, thoughtful set out on the drawing board will minimise the site-cutting of the panels, which is time consuming and wasteful compared to the installation of stock panels.

14.1.1 External Wall Height

Typically the external wall height is the distance from the base of the slab step down and up to 50mm above the height of the eaves lining.

Window and door heights should also be considered when determining panel layout. Typically a 300mm distance below or above door or window heights is desirable.

14.1.2 Wall Length (Horizontal Dimensions)

Although not as critical as the wall height, the wall length designed in 300mm increments will help reduce waste.

14.2 TERMITES

It is the builder's responsibility to ensure that all council and NCC requirements are fully adhered to in regard to the design of the house for preventing termite attack. The construction details contained in this guide do not attempt to fully address the issues due to the variation of requirements from state to state. STAAC WALL® is ideally suited to the exposed edge method of perimeter protection. NCC 2022 Vol. 2 Part 3.4 deals with termite risk management and the full detail of termite management is covered comprehensively in AS 3660.

14.3 FOOTINGS & FOUNDATIONS

Footings to support STAAC WALL® system should be designed by a qualified engineer and comply with articulated masonry veneer construction as specified in Australian Standard AS 2870.

14.4 MOVEMENT CONTROL JOINTS

Building movements are due to many factors working together or individually, such as support structure movement (lateral sway or vertical deflection), thermal expansion and contraction and differential movements between materials. This movement, unless relieved or accommodated for, will induce stress in the materials, which may be relieved in the form of cracking. To accommodate these movements and relieve any induced stresses, which could potentially crack the wall, movement joints need to be installed.

Control joints are provided to relieve the induced stresses resulting from thermal expansion or contraction of the AAC, or differential movement between the AAC and another material or structure, such as abutting walls or columns of concrete or brickwork. Control joints can delineate coating shrinkage breaks.

Vertical control joints should coincide with control joints in the supporting structure and anywhere that significant structural movement is expected, where the wall abutts a vertical structure, such as an existing building, or adjacent to large openings. Refer to control joints details in construction details section.

Table 14.1 Spacing of vertical control joint based on site classification

SITE CLASS AS PER AS2870	MAXIMUM VERTICAL CONTROL JOINT SPACING
A, S	6m
M, M - D	5.5m
H1, H1 - D	5m
H2, H2 - D	4.5m

This guide proposes minimum widths for the movement joints. The project engineer will determine if the joints are sufficient to accommodate the movement of the specific project building. Typically, the vertical joint is nominally 10mm wide x 10mm deep and filled with an appropriate backing rod and flexible sealant.

At all control joints, the top hat should be discontinuous to allow for the effective movement of the building at these locations. A horizontal control joint is required beneath slabs or angles to accommodate any expected deflection. The magnitude of the deflection must be verified by the building designer. Typically, the horizontal joint is nominally 10mm wide and filled with an appropriate external grade acoustic and / or fire rated paintable sealant.

14.4.1 Design Tip

In order to reduce the load of the upper storey STAAC WALL panels and make installation easier, the lower storey panels should be specified as 2700mm/3300mm in length and the upper storey panels as 2400mm in length. The vertical dimensions can be adjusted to suit.

Figure 14.1 Side View – Horizontal Control Joint

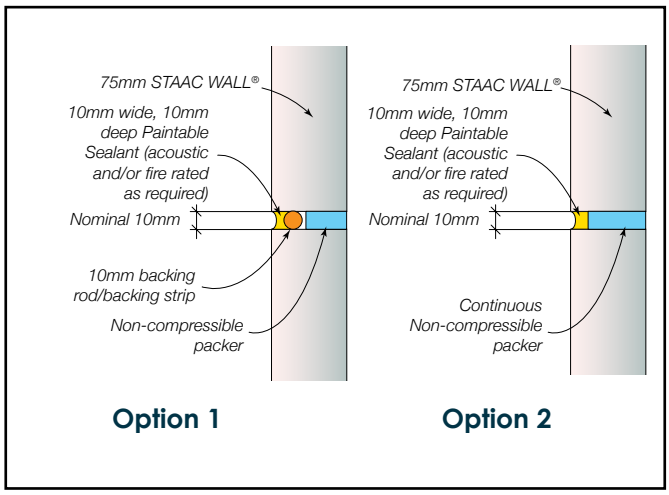

Figure 14.2 Top View – Horizontal Control Joint

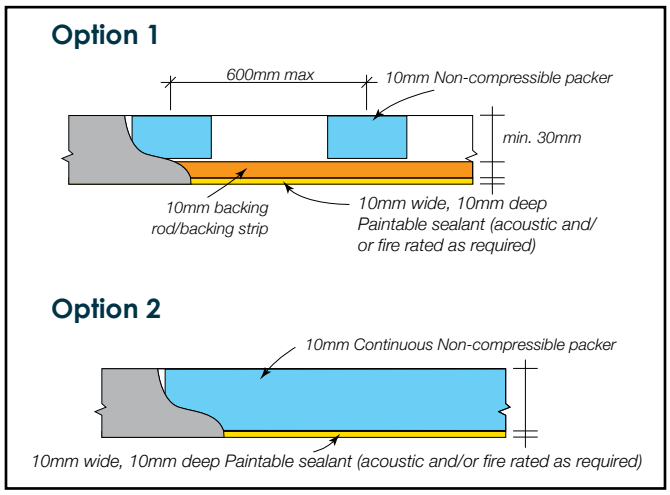

NOTE: Use 10mm wide by 10mm deep CSR Fireseal Sealant at vertical and horizontal control joints to achieve FRL of -/120/120 for the wall system. See section 2.2. Protect Fireseal Sealant from rain until sealant has developed a thick skin. Once cured, Fireseal should be painted over with a compatible external grade acrylic coating i.e Dulux Acratex or similar.

14.4.2 Steel Joists or Engineered Timber Joists (≤1% shrinkage)

Lower storey panels are to bear on the slab edge. However, consideration should be given to the sectional size of the lintels over openings on the lower storey. As the details reveal, only a dummy control joint (nominal 10mm packers, backing rod and an external grade acoustic and/or fire rated paintable sealant joint) is required at the horizontal junction between the upper and lower panels. The panel support packer should consist of a durable material that will not degrade during the life of the structure.

14.4.3 Timber Frame Construction (>1% shrinkage joist)

Movements in the order of 25mm can occur in a multi-storey timber frame with a timber first floor. The fixing method used in the STAAC WALL® External Wall System does not allow for this extent of differential movement between the external skin and the timber frame.

The allowances for shrinkage of timber framing in NCC 2022 Vol. 2, by providing gaps between framing and masonry, should be adopted as a minimum.

It is therefore recommended that the upper storey panels be installed 35mm clear of the lower storey panels. During construction a temporary packer is used to separate the panels and is then removed after the panels have been fixed. An architectural trim (feature moulding) must be used to hide the horizontal control joint. Contact STAAC WALL® Technical Services for further details.

The impact of this construction is to load the lower storey frame with the weight of the upper storey panels. In effect, an extra 35kg/m^2 (for the weight of the upper panels) is being added to the load already carried by the timber frame. The load approximates 0.84KN/m (2.4m wall height). To simplify the design implications of this extra load, it is recommended to add an extra 1.1m of tributary width for a 90kg/m^2 tile roof load (for 2.4m upper wall heights) for the design of the lower storey frame and timber lintels, when using AS 1684. – non-cyclonic areas.

14.5 CONTROL JOINT DETAILS

The following information provides the necessary rules for control joints when installing the 75mm STAAC WALL® External Wall System:

- Vertical control joint spacing based on site classification is shown in Table 14.1.
- Vertical control joints required at external and internal corners.
- Vertical control joints required above and below both sides of all doors, including sliding and garage doors.
- Vertical control joints required at the position where a wall changes height by more than 20% e.g a vertical control joint is required when wall height changes from 2700mm to ≥ 3240mm.
- Horizontal control joints required at every horizontal floor junction.
- Horizontal control joints required at a maximum height of 3.9m.

For openings < 2450mm in width

Control joint not required. If the straight joint that extends above or below the window jamb is less than 600mm long, a control joint or a glued and meshed joint is not required.

For openings ≥ 2450mm and < 3600mm wide

Control joint required to at least one side of the opening (i.e. above and below the opening). If the straight joint that extends above or below the window jamb is less than 600mm long a control joint or a glued and meshed joint is required to the opposite side of the opening.

For openings ≥ 3600mm in width

Control joint required to both sides of the opening (i.e. above and below the opening).

14.6 CONDENSATION

Condensation is a complex problem and can occur under a variety of conditions, not just cold conditions. Literature on this subject is available from CSIRO/BRANZ/ASHRAE and must be consulted when building in areas where condensation is likely to occur. In these cases, the appropriate use of sarking as a vapour barrier or as thermal insulation, or both, may be effective in controlling condensation.

14.7 PENETRATIONS

Small service penetrations through the panel should allow for differential movement between the panel and the service. All penetrations are a potential source for water ingress and should be sealed with an appropriate acoustic and/or fire rated paintable sealant.

14.8 INSTALLATION OF SERVICES

Services should be installed through the stud frame as much as possible. If service is installed on the panel, it should run parallel to the battens. Penetrations through the STAAC WALL® panel for services should be neatly filled and sealed. The sealant must be fire-rated if the wall structure is fire rated.

Figure 14.3 Install piping services prior to the installation of STAAC WALL® panel

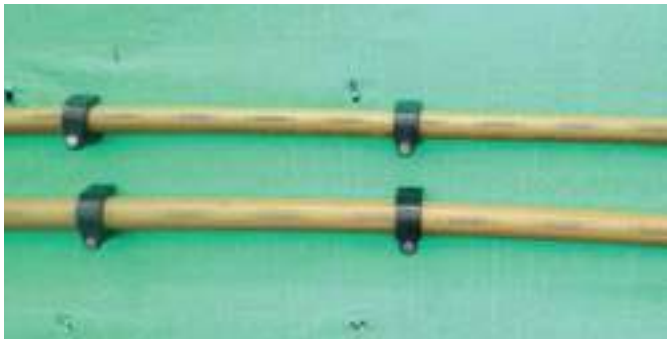

Figure 14.4 Neat finishing of installed services

14.9 WINDOWS

The builder should also ensure that the reveal size is correct to suit STAAC WALL®. Refer to the table below for recommendations. The sizes below typically apply to aluminium framed windows. If timber windows are being used similar tolerances and guidelines apply.

STUD SIZE 70mm		STUD SIZE 90mm	
TOP HAT SIZE	REVEAL SIZE[1]	TOP HAT SIZE	REVEAL SIZE[1]
24mm	100mm	24mm	120mm
35mm	115mm	35mm	135mm

NOTE:

1. Figures shown assume brace board is used on framework.
2. Reveal sizes may vary from one manufacturer to another.
3. The external sealant in the control joints adjacent to windows must be returned to the window frame, and sealant installed along the window head, sill and junction of the sides of window to the panel. No gap should exist between the external sealant and the window frame.

15. DURABILITY

15.1 OVERVIEW

Durability means the capability of a building or its parts to perform a function over a specified period of time. It is not an inherent property of a material or component, it is the outcome of complex interactions among a number of factors, including:

- The service conditions
- Material characteristics
- Design and detailing
- Workmanship
- Maintenance

The following sub-sections of the durability topic are written in order to provide general guidelines on how best to provide, enhance and maintain adequate durability of 75mm STAAC WALL® panels.

Stoddart Group does not recommend AAC Panel be exposed to the elements for more than 3 months to avoid deterioration of the panels and system components, else 2 coats of primer is recommended to minimize deterioration to the STAAC Wall.

15.2 MAINTENANCE

The durability of the 75mm STAAC WALL® External Wall System can be enhanced by periodic inspection and maintenance. Inspections should include but are not limited to the examination of the coatings, flashings and sealants. Paint finishes must be maintained in accordance with the manufacturer's recommendations. Any cracked or damaged finish or sealant, which would allow water ingress, must be repaired immediately by recoating or resealing the affected area. Any damaged flashings or panels must be replaced as for new work.

The durability of the system can also be increased by using Class 4 fixings as defined in AS3566 throughout, additional treatment of steelwork, and by painting all exposed sealants to the manufacturer's recommendations.

15.3 COASTAL AREAS

75mm STAAC WALL® panels can be used in coastal areas with additional precautions to ensure salt does not build up on the surface of the wall. For buildings which are ≤1000 metres from a shoreline or large expanse of salt water one of the following is required:

- All horizontal and vertical movement joints must be appropriately caulked; and
- All walls must be sufficiently exposed from above so that rain can perform natural wash-down of the wall; or
- Walls which are protected by soffits above must be washed down twice per year to remove salt and debris build-up particularly at the joints; and
- In all cases, Class 3 screws must be used as a minimum

15.4 FASTENER PROTECTION

Class 3 screws must be driven into the outer face of the 75mm STAAC WALL® panel by at least 5mm and filled with CSR Adhesive.

15.5 STAAC WALL® PANELS

75mm STAAC WALL® has many properties which make it a very durable product, including:

- Will not rot or burn
- Is not a food source for termites
- Approximately quarter the weight of conventional concrete
- Solid and strong with corrosion protection coated steel reinforcement

15.6 DURABILITY OF COMPONENTS

It is the responsibility of the building designer to ensure that the components such as screws, top hat battens and other steel components have the appropriate corrosion protection to be able to maintain their strength and integrity to suit the required design life of the project.

When assessing durability, the following documents can be referred to for guidance:

- ABCB Guideline Document – Durability in buildings: 2015.
- AS/NZS 2312: 2014 – Guide to the protection of structural steel against atmospheric corrosion by the use of protective coatings.
- ISO 9223: 2012 – Corrosion of metals and alloys – Corrosivity of atmospheres – Classification.
- AS 3566: 2002 – Self drilling screws for the building and construction industries.
- AS 2331: 2006 – Methods of test for metallic and related coatings.

Reference to AS 3566 should always be adhered to when selecting the screw's corrosion resistance classification.

15.7 WALL FRAMES

Consult frame manufacturer for guidance on framing durability and maintainence requirements.

16. DELIVERY, STORAGE & HANDLING

16.1 UNLOADING PANEL PACKS

Panel packs should only be unloaded and moved with approved lifting devices. Before use, the lifting devices should be checked for the required lifting tags. Packs should be unloaded as close as possible to the intended installation area. This will increase work efficiency and minimise the need for secondary lifting.

NOTE: Secondary handling increases the risk of panel damage. The repair of damage sustained during lifting and moving is the responsibility of the lifter. Where damage is excessive, the panels must be replaced.

16.2 STORAGE

All materials must be kept dry and preferably stored undercover. Care should be taken to avoid sagging or damage to ends, edges and surfaces.

All packs of STAAC WALL® products must be stacked on edge and properly supported off the ground, on a level platform. Panel bundles can be stacked two high. The project engineer should be consulted as to the adequacy of the structure to support the stacked bundles.

If outside, STAAC WALL® panels must be stored off the ground and protected from the weather. Only single packs positioned on the ground can be opened. To provide a level surface, we recommend placing temporary joists beneath the supporting cleats.

When storing, the panel orientation must be horizontal with the long edge supported to timber bearers.

16.3 UNSTRAPPING PACKS

Ensure appropriate bracing is installed to packs prior to removal of strapping to prevent panels from falling. Panels can be held together with sash clamps, ratchet straps or stabilising bars.

Figure 16.1 Stacking packs of STAAC WALL® panels

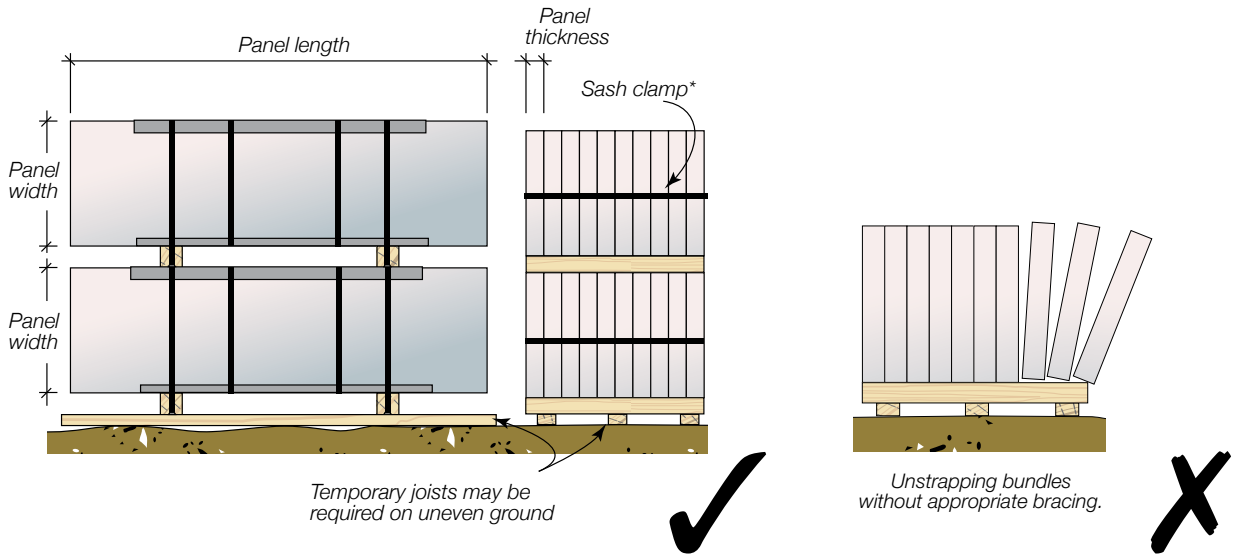

16.4 HANDLING

Moving and handling STAAC WALL® panels should be done as much as possible using mechanical aids such as forklifts, cranes or panels lifting trolleys. Manual handling where people physically move a panel should be kept to a minimum, with the weight being supported by an individual kept as small as possible. Any concerns regarding the weight to be handled should be discussed with the panel installation supervisor.

Follow the suggestions below to avoid injuries to installation personnel:

- Use mechanical lifting / support equipments, such as trolleys, forklifts, cranes and levers whenever possible
- Manual lifting and moving of panels should be done as a coordinated team work
- Keep the work place clean to reduce the risk of slips, trips and falls, which can cause injury
- Plan the sequence of installation to minimise panel movements and avoid unnecessary lifts
- Train employees in good lifting techniques to minimise the risk of injury
- Lift panels only from the edges and are not to be handled flat.

16.5 HEALTH, SAFETY & PERSONAL PROTECTIVE EQUIPMENT (PPE)

Always wear gloves when handling panels, AAC is produced from cement and may cause skin irritation.

Approved fit tested respirators to AS/NZS 1715 and AS/NZS 1716 and safety eyewear to AS 1336 must be worn at all times when cutting and chasing AAC material. Check the STAAC WALL® Material Safety Data Sheets for material safety information.

16.6 CUTTING

Cutting of cement based products may cause dust, which contains respirable crystalline silica, with the potential to cause bronchitis, silicosis and lung cancer after repeated and prolonged exposure. When using power or hand tools, on AAC products, wear a fit tested P1 or P2 respirator and eye protection. When cutting, routing or chasing AAC products with power tools, use dust extraction equipment that complies with AS/NZS 60335.2.69 Class M or H requirements and wear hearing protection. Wet cutting may be mandatory in certain Australian States. Please confirm with local work safe authority on cutting / chasing requirement for AAC products. Refer to the appropriate STAAC WALL® MSDS for further information.

Reinforcement exposed during cutting must be coated with a liberal application of STAAC WALL® recommended Anti-corrosion protection paint.

17. CONSTRUCTION DETAILS

DETAIL CATEGORY	DETAIL	FIGURE	PAGE
Single storey construction details	Isometric view detail panel supported at base	17.1.1	38
	Isometric view detail panel suspended	17.1.2	38
	Hip roof elevation	17.1.3	39
	Gable end elevation	17.1.4	39
	Typical section detail	17.1.5	40
	High wall section detail (3900mm max.)	17.1.6	40
Multi-storey construction details	Isometric view detail	17.2.1	41
	Hip roof elevation	17.2.2	42
	Gable end elevation	17.2.3	42
	Typical timber frame section using joists with >1% shrinkage	17.2.4	43
	Steel frame section or engineered joists with ≤1% shrinkage	17.2.5	43
Multi-storey addition details	External wall cladding detail extending above first floor	17.2.6	44
	Isometric view detail	17.2.7	44
	Typical section with brick veneer below	17.2.8	45
	Typical section with double brick below	17.2.9	45
Fixing & installation details	75mm STAAC WALL® External Wall System fixing detail	17.3.1	46
	75mm STAAC WALL® Zero Boundary Wall System fixing detail	17.3.2	46
	Screw layout drawing	17.3.2	46
	75mm STAAC WALL® Zero Boundary Wall System	17.3.4	46

DETAIL CATEGORY	DETAIL	FIGURE	PAGE
Footing junction details	Junction to shallow concrete footing	17.4.1	47
	Junction to deep concrete edge beam	17.4.2	47
	Junction to masonry earth retaining wall	17.4.3	47
	Junction to masonry dwarf wall	17.4.4	47
	Junction to existing piers/stumps	17.4.5	48
	Junction to shallow concrete edge beam	17.4.6	48
	Base detail suspended floor – pier connection	17.4.7	48
	Junction to steel angle	17.4.8	48
Wall junction details & sections	Typical roof eaves detail – Option 1	17.5.1	49
	Typical roof eaves detail – Option 2	17.5.2	49
	Roof to wall junction detail – Option 1	17.5.3	49
	Roof to wall junction detail – Option 2	17.5.4	49
	Typical roof eaves detail for zero boundary wall systems	17.5.5	49
	Balcony detail	17.5.6	49
	Zero boundary wall detail to 75mm STAAC WALL® external wall system	17.5.7	50
	Zero boundary wall detail to brick veneer	17.5.8	50
	Parapet capping	17.5.9	50
	STAAC WALL® to pitched roof junction	17.5.10	50
	Gable end wall detail	17.5.11	51
	Gable end wall detail - lintel panel over window	17.5.12	51
	Beam penetration detail	17.5.13	51
	Column detail (glued and screwed)	17.5.14	51

DETAIL CATEGORY	DETAIL	FIGURE	PAGE
Control joint details	Internal corner	17.6.1	52
	External corner	17.6.2	52
	Typical detail for control joints positioned on corner	17.6.3	53
	Typical detail for control joints positioned away from a corner	17.6.4	53
	Typical horizontal control joint – engineered timber or steel frame	17.6.5	54
	Horizontal control joint – cavity brickwork to STAAC WALL® panel	17.6.6	54
	Horizontal control joint – brick veneer to STAAC WALL® panel - Option 1	17.6.7	54
	Horizontal control joint – brick veneer to STAAC WALL® panel - Option 2	17.6.8	54
	Typical vertical control joint	17.6.9	55
	Typical vertical control joint with double studs	17.6.10	55
	Control joint – discontinuous top hats on a single stud	17.6.11	55
	Typical window control joint detail – lintel over	17.6.12	55
Door and window details	Typical window sill detail – aluminium window frame – Option 1	17.7.1	56
	Typical window sill detail – aluminium window frame – Option 2	17.7.2	56
	Typical window sill detail – aluminium window frame – Option 3	17.7.3	56
	Header detail	17.7.4	56
	Garage head detail	17.7.5	56
	Garage door – jamb detail – Option 1	17.7.6	56
	Garage door – jamb detail – Option 2	17.7.7	56
	Sliding door sill detail – Concrete sill < 270mm	17.7.8	57
	Sliding door sill detail – 50mm STAAC WALL® sill > 270mm	17.7.9	57
Miscellaneous detail	Panel layout drawing – Plan view	17.8.1	58

17.1 SINGLE STOREY CONSTRUCTION DETAIL

Figure 17.1.1 Single storey construction – isometric view detail panel supported at base

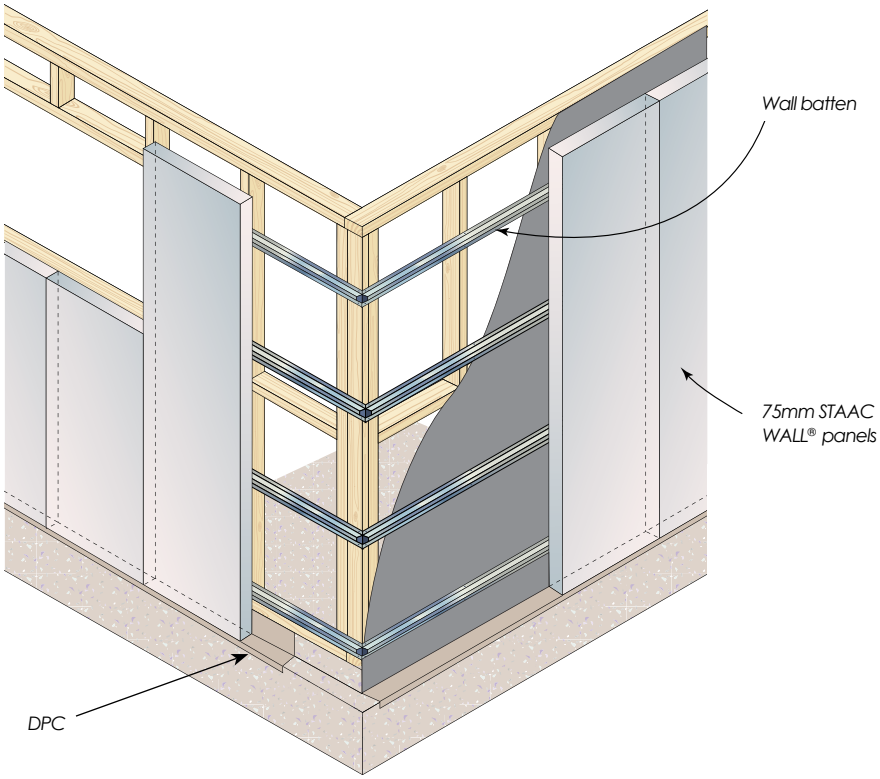

Figure17.1.2 Single storey construction – isometric view detail panel suspended

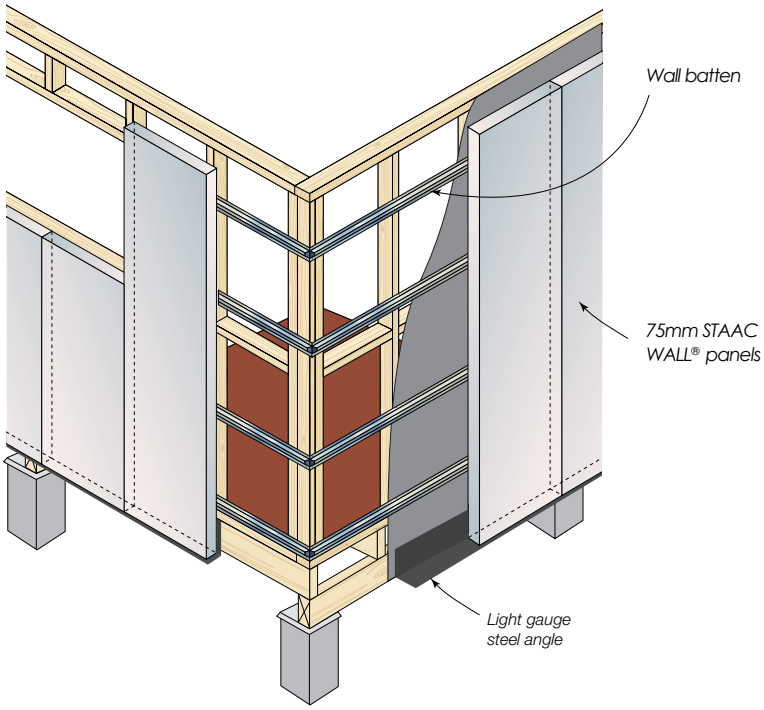

NOTE:

1. This detail is not considered to achieve a fire rating level.
2. The light gauge steel angle is for the purpose of closing the cavity at the base of the wall.
3. The angle is optional and is not supplied by STAAC WALL®.

Figure 17.1.3 Single storey construction – hip roof elevation

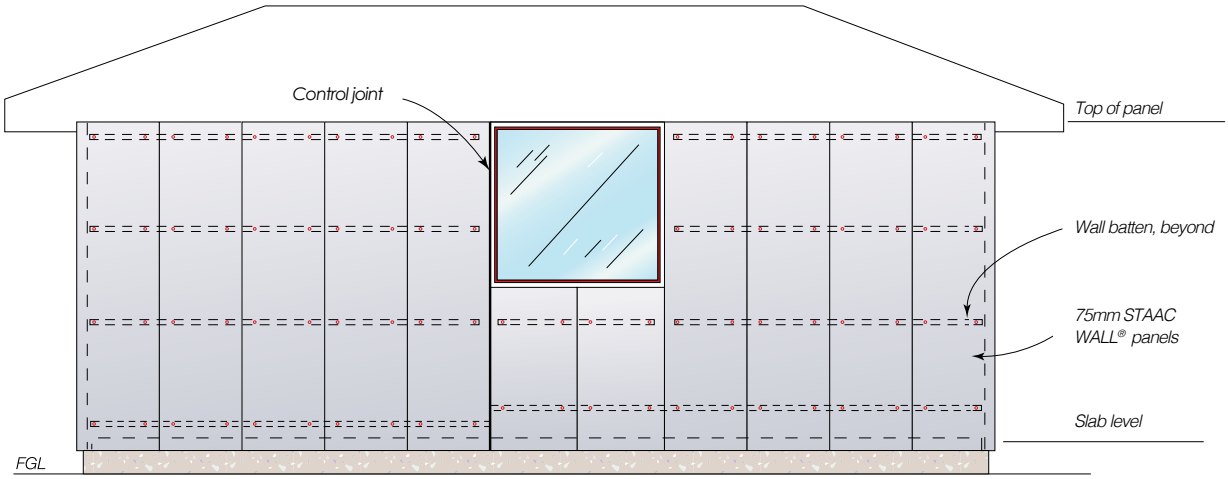

Figure 17.1.4 Single storey construction – gable end elevation

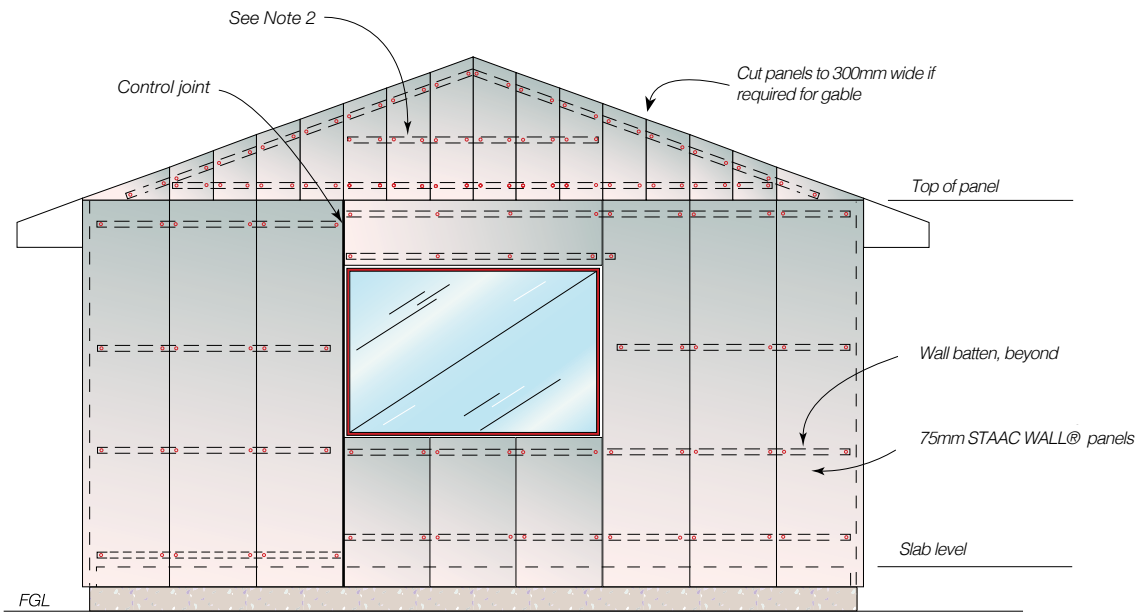

NOTE:

1. Number of wall battens and wall batten spacing to be confirmed by the building designer.
2. Additional wall battens may be required, for suspended panels. Refer to Table 9.3 of this guide.
3. These details have not shown the set-out of wall battens to accommodate control joint locations. This is the responsibility of the building designer.

Figure 17.1.5 Single storey construction – typical section detail

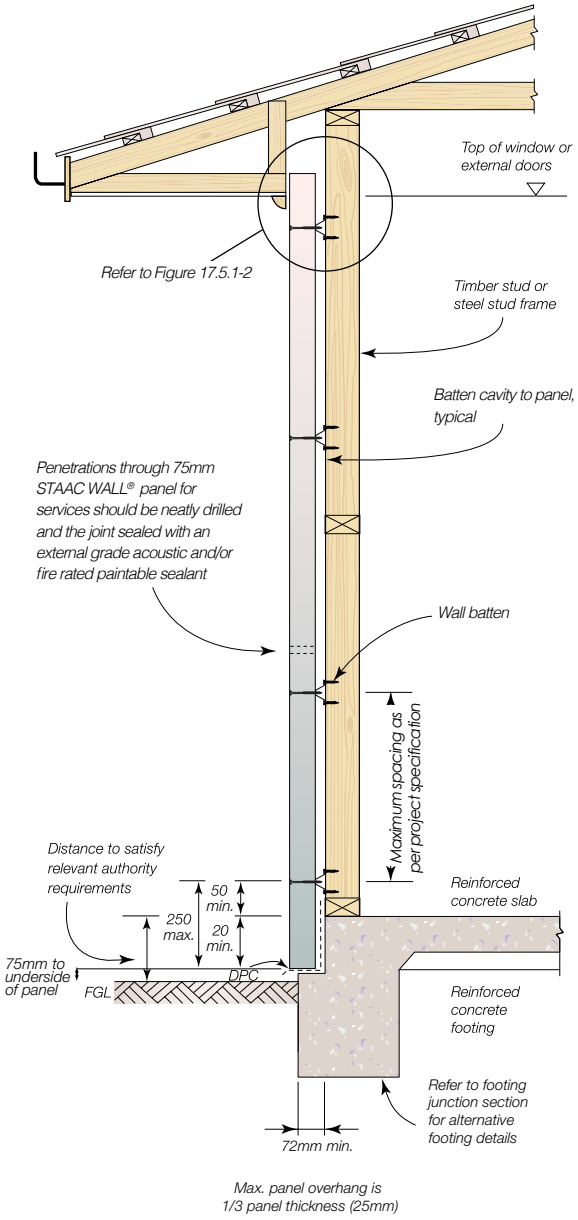

Figure 17.1.6 Single storey construction – high wall section detail (3900mm max.)

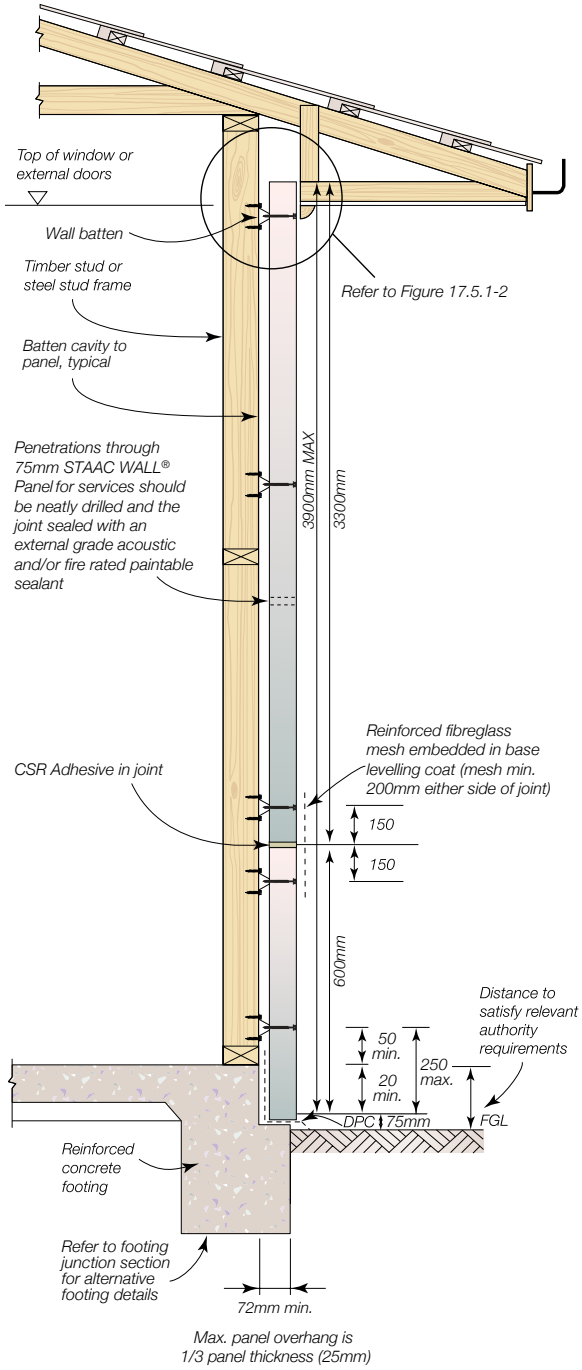

NOTE:

1. Figures 17.1.5 and 17.1.6 slab edge details do not comply with the termite visible inspection zone requirements. Alternate termite management systems must be used when selecting these details. It is the responsibility of the builder to provide a suitable physical or chemical barrier in accordance with AS 3660.
2. STAAC WALL® panels are supported at the base on concrete slab edge.

17.2 MULTI-STOREY CONSTRUCTION DETAILS

Figure 17.2.1 Multi-storey construction – isometric view detail

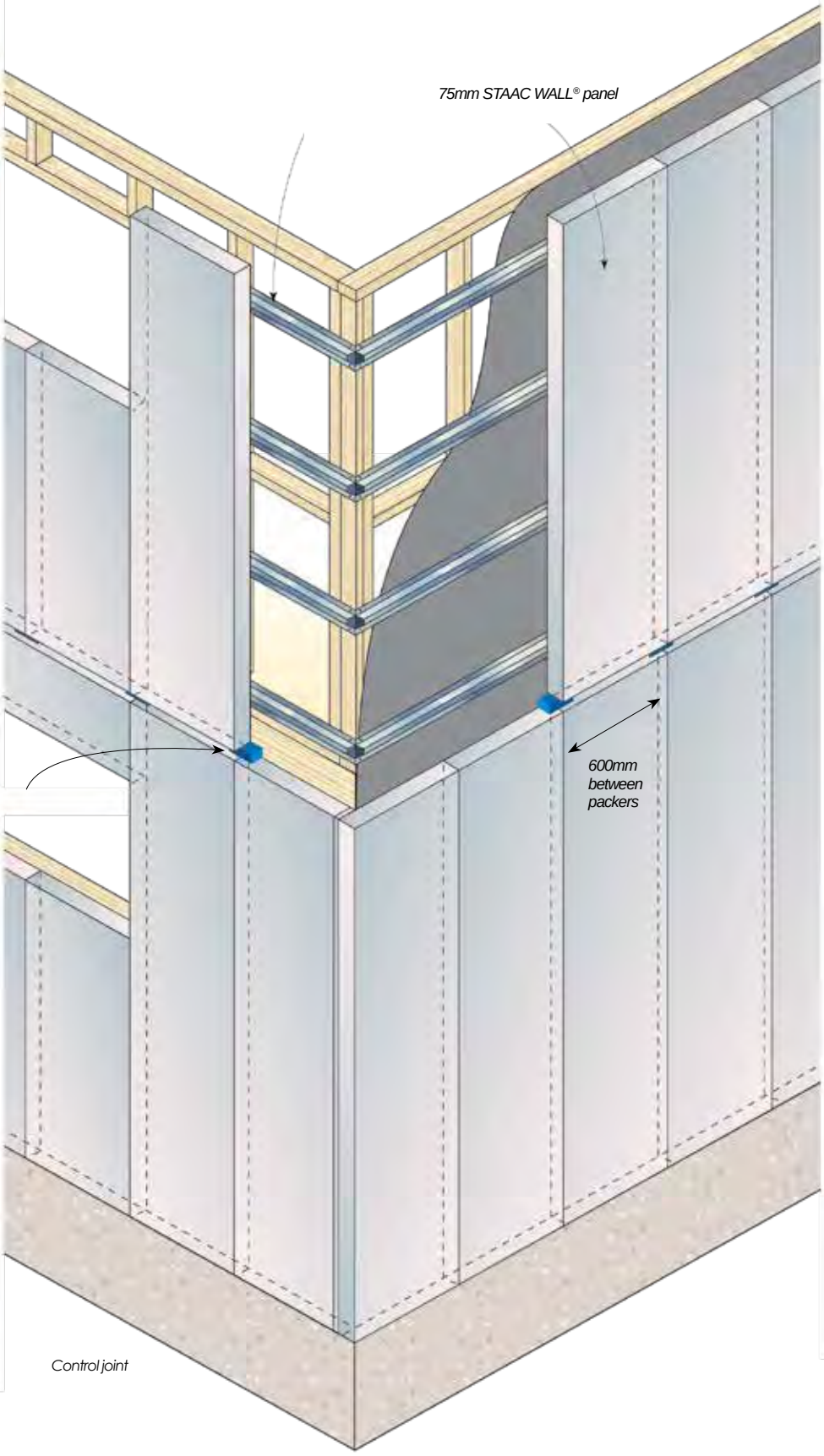

Figure 17.2.2 Multi-storey construction – hip roof elevation

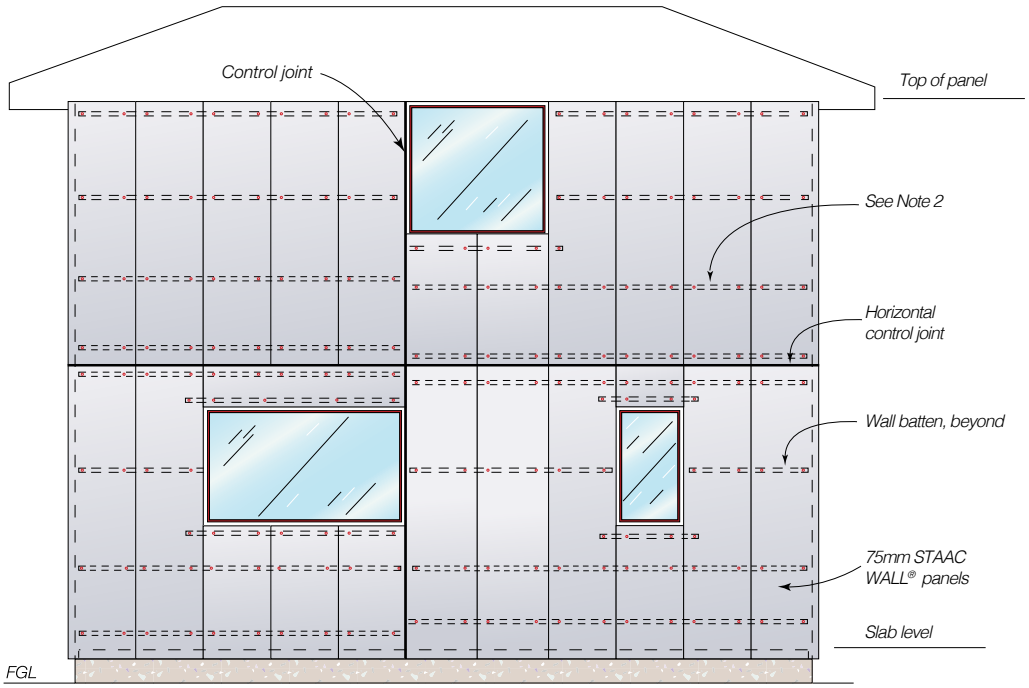

Figure 17.2.3 Multi-storey construction – gable end elevation

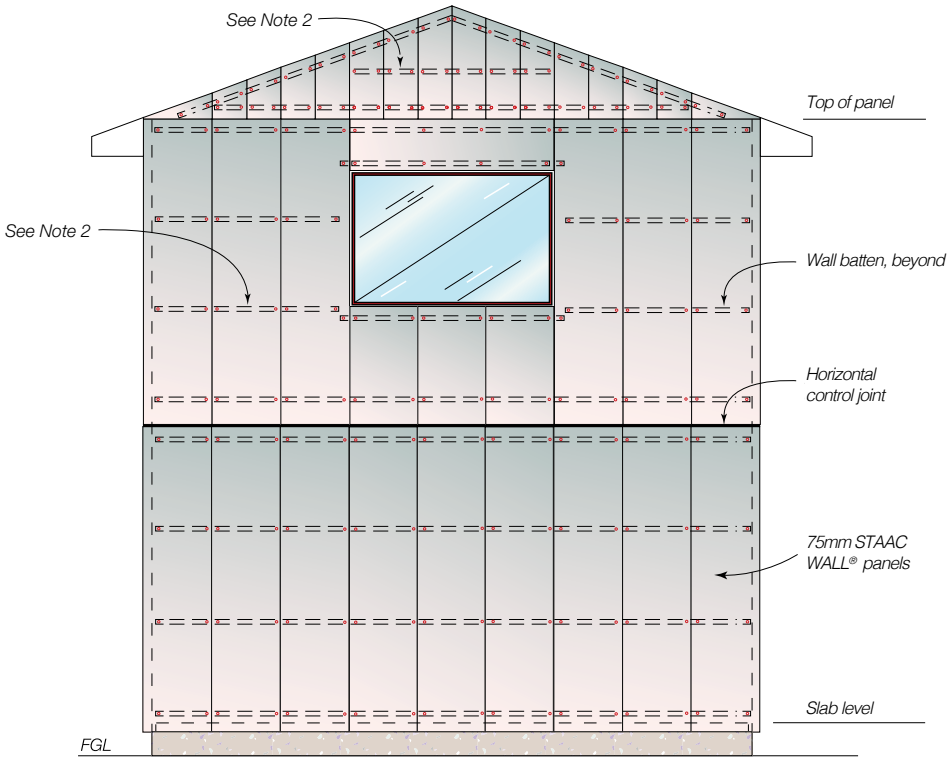

NOTE:

1. Number of wall battens and wall batten spacing to be confirmed by the building designer.
2. Additional wall battens may be required, for suspended panels. Refer to Table 9.3 of this guide.
3. These details have not shown set-out of wall battens to accommodate control joint locations. This is the responsibility of the building designer.
4. Frame design of lower floor to allow for extra load on wall from upper floor 75mm STAAC WALL® panels.
5. Minimum four horizontal wall battens required for upper floor 75mm STAAC WALL® panels.

Figure 17.2.4 Multi-storey construction – typical timber frame section using joists with >1% shrinkage

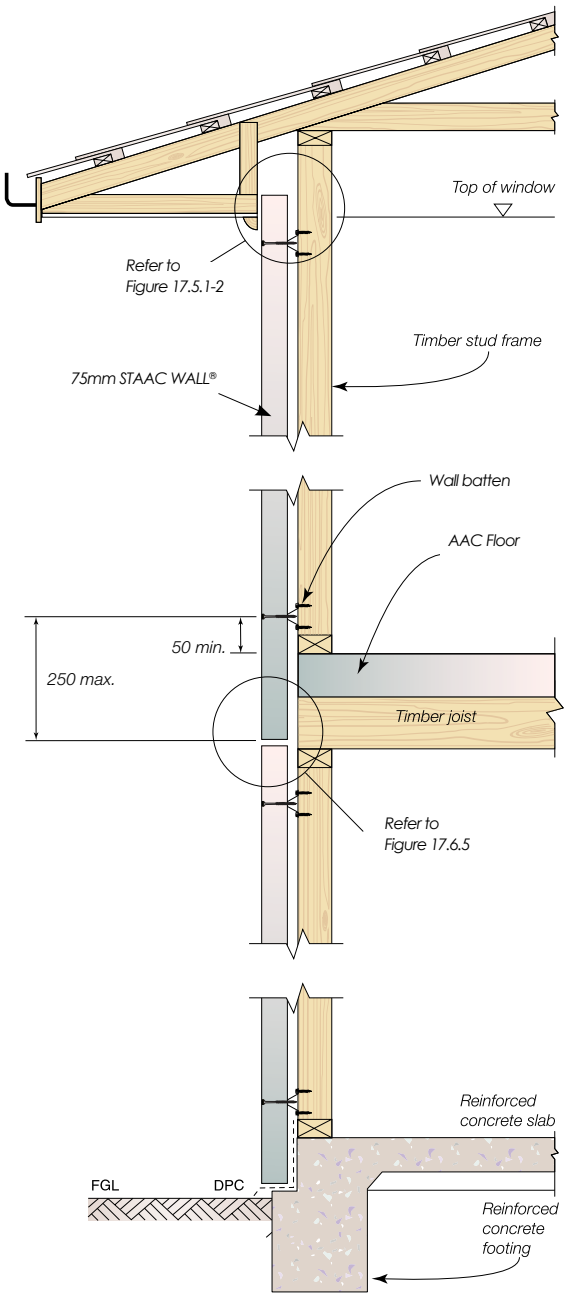

Figure 17.2.5 Multi-storey construction – steel frame section or engineered joists with ≤1% shrinkage

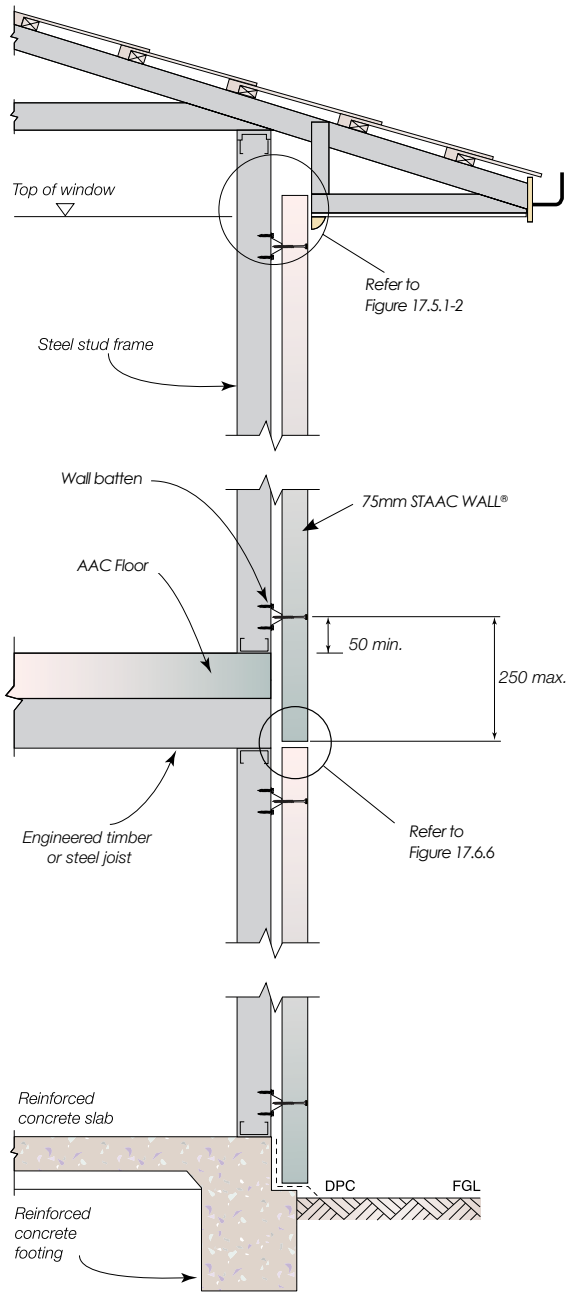

NOTE: These gap widths can be reduced for low shrinkage floor systems. Contact the floor system manufacturer for guidance on acceptable gap width. Refer also to NCC Vol. 2 and AS 1684.

Figure 17.2.6 External wall cladding detail extending above first floor

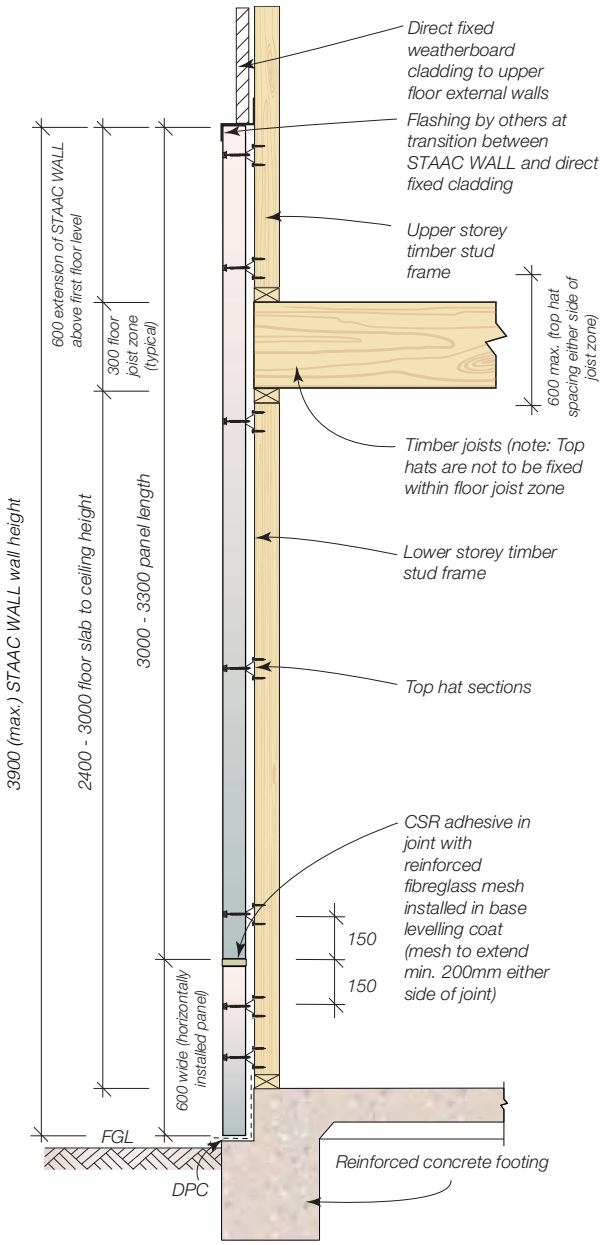

Figure 17.2.7 Multi-storey addition – isometric view detail

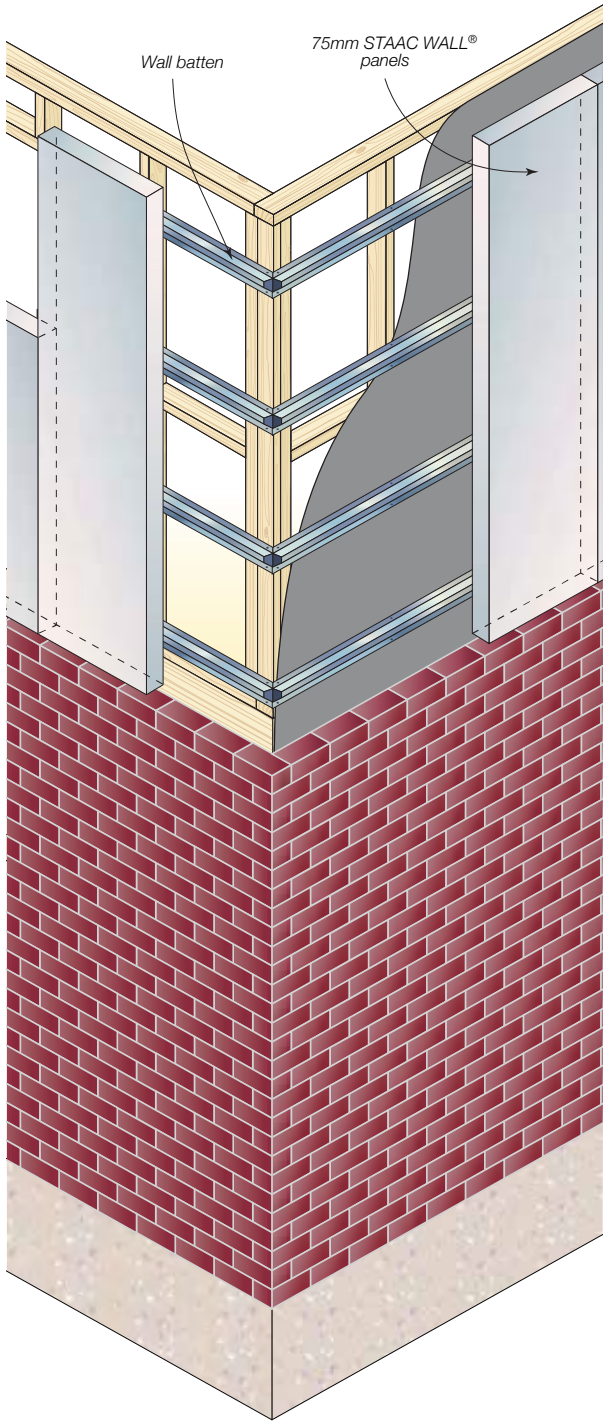

Figure 17.2.8 Multi-storey additions – typical section with brick veneer below

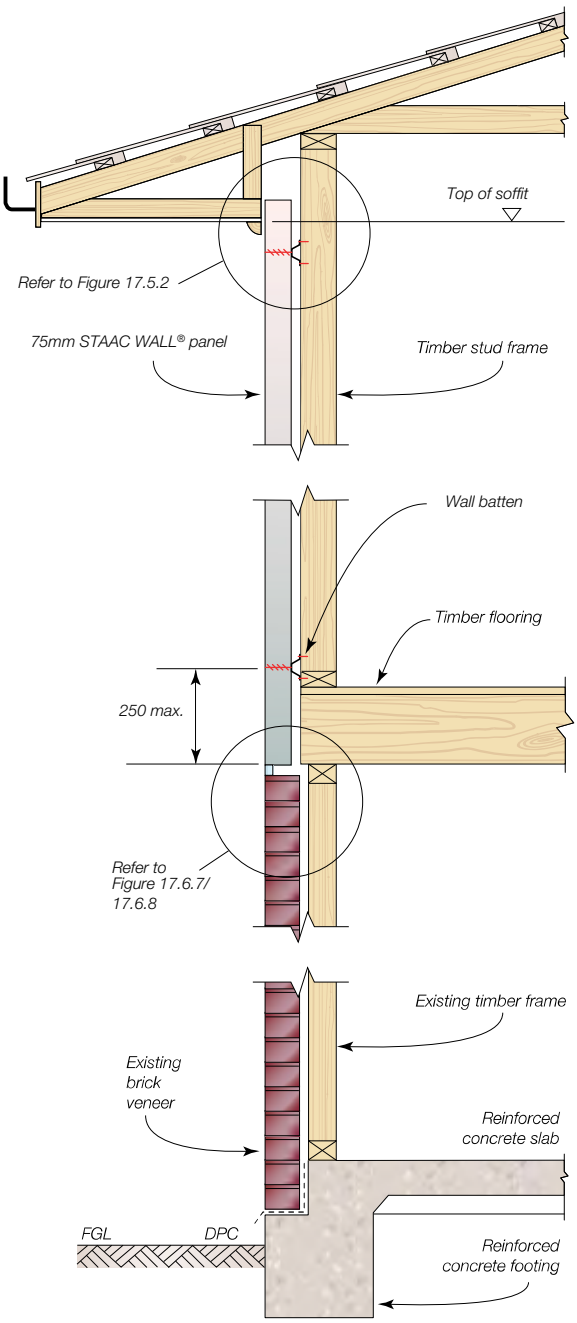

Figure 17.2.9 Multi-storey additions – typical section with double brick below

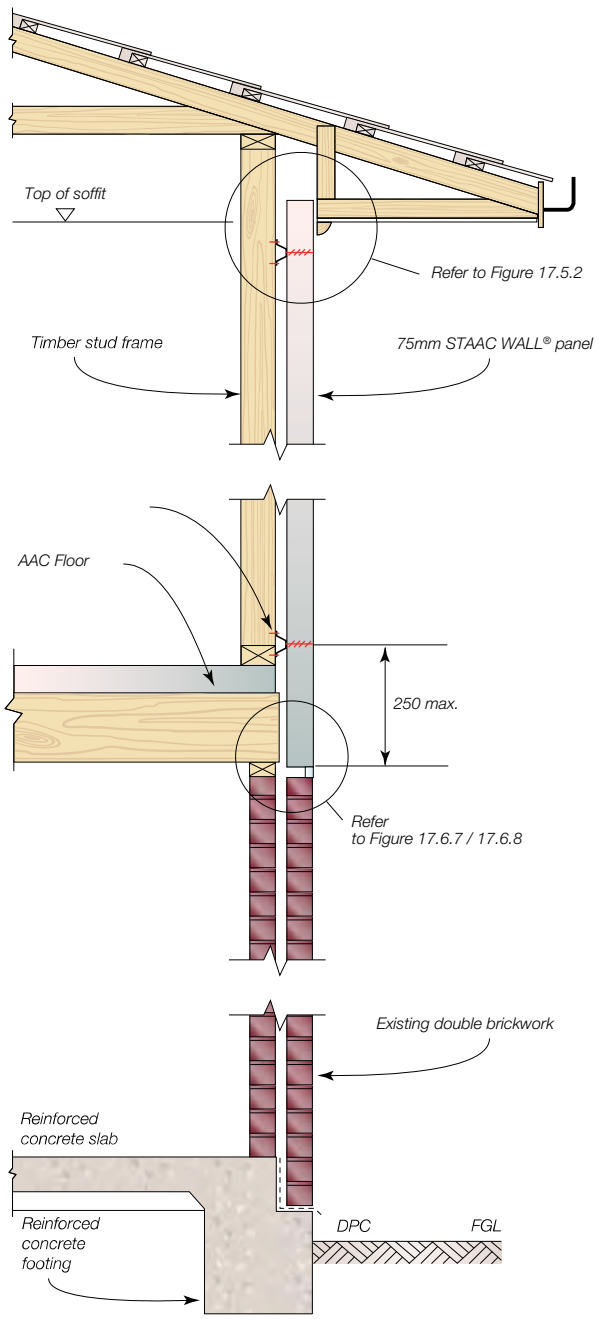

NOTE: Minimum 4 rows of battens are required for panels that are suspended off the frame. Refer to Table 9.3 of this guide.

17.3 FIXING & INSTALLATION DETAILS

Figure 17.3.1 75mm STAAC WALL® External Wall System fixing detail (Achieves FRL 90/90/90 when installed as part of the wall system. See Section 10)

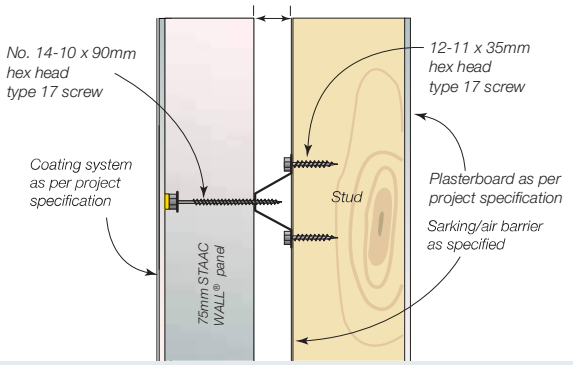

NOTE: When positioning the stud frames allow 5-7mm extra cavity width for the sheet bracing between top hat and timber stud.

Figure 17.3.2 75mm STAAC WALL® Zero Boundary Wall System fixing detail (Achieves FRL 90/90/90 when installed as part of the wall system. See Section 10)

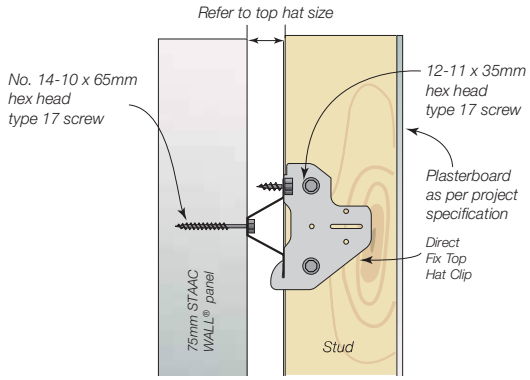

IMPORTANT: Top hat clip is fixed on the left hand side of the stud (when looking from inside to the outside of the building) except at the last stud, only when the clip may be installed upside down.

Installing the clip upside down i.e where the screw fixing from the clip to the top hat is at the bottom flange of the top hat, will be acceptable provided that:

A: The upside down clip is fixed on the right hand side of the stud (when looking from the inside to the outside of the building)
B: The upside down clip installation is to the last stud of a wall run (only), such that the spacing between the last and second last studs is no greater than 600mm,
C: The top hat is continuous in this region for a minimum of two spans i.e top hat extends across two stud spacings,
D: In all other locations, clips are to be installed to the left hand side of the stud with the screw fixing to the top side of the clip i.e into the top flange of the horizontal top hat.

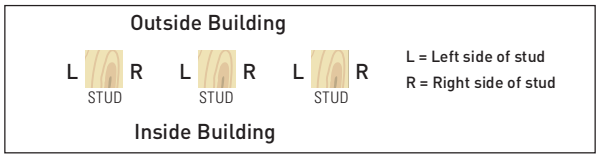

Figure 17.3.3 Screw layout drawing

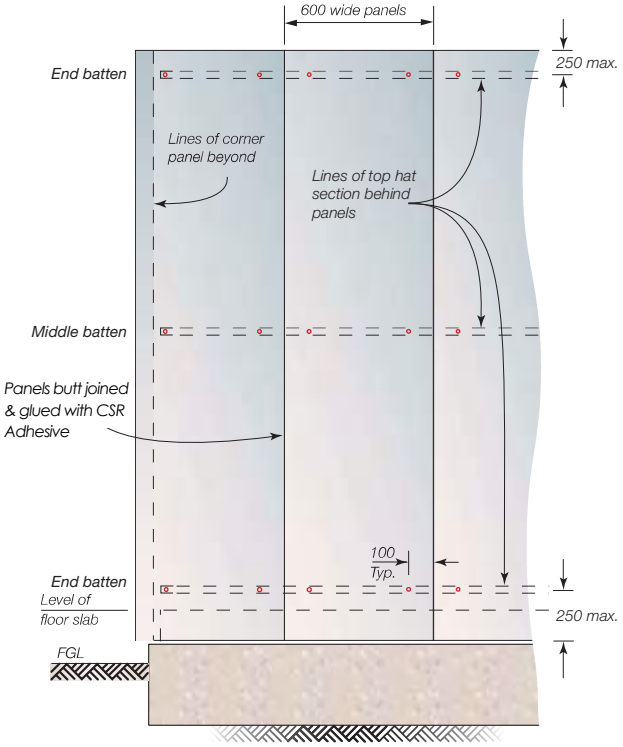

75mm STAAC WALL® panel setout – elevation view

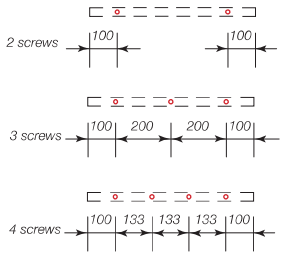

Screw layout

Figure 17.3.4 75mm STAAC WALL® Zero Boundary Wall System (Achieves FRL 90/90/90 when installed as part of the wall system. See Section 10)

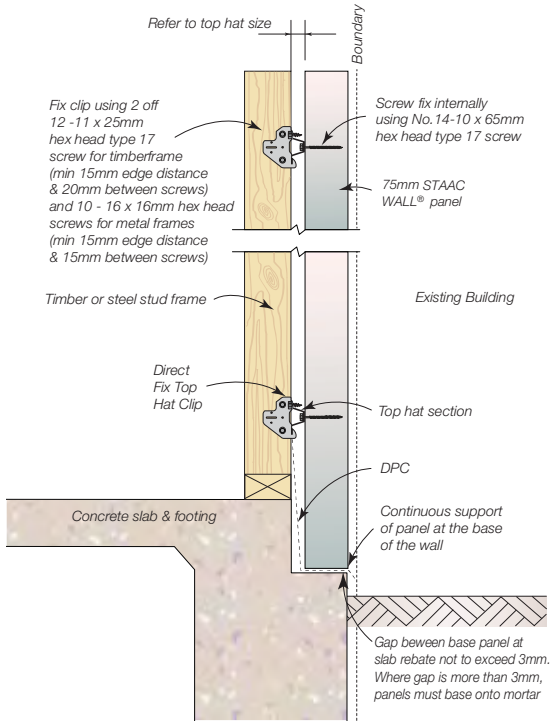

17.4 FOOTING JUNCTION DETAILS

Figure 17.4.1 Junction to shallow concrete footing

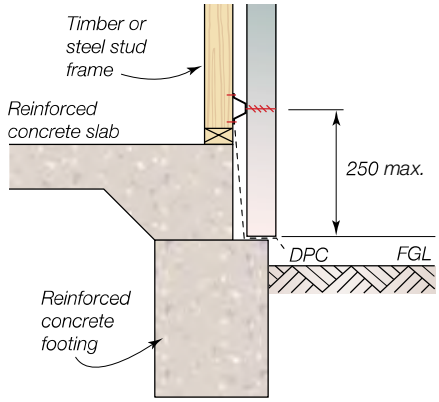

Figure 17.4.2 Junction to deep concrete edge beam

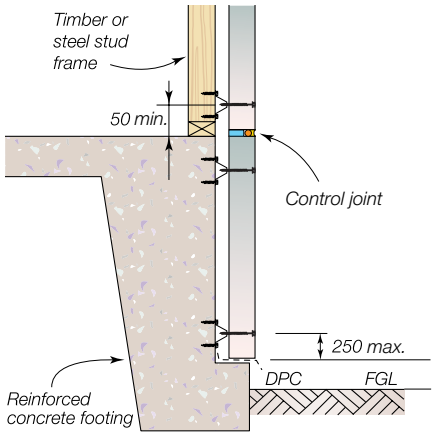

Figure 17.4.3 Junction to masonry earth retaining wall

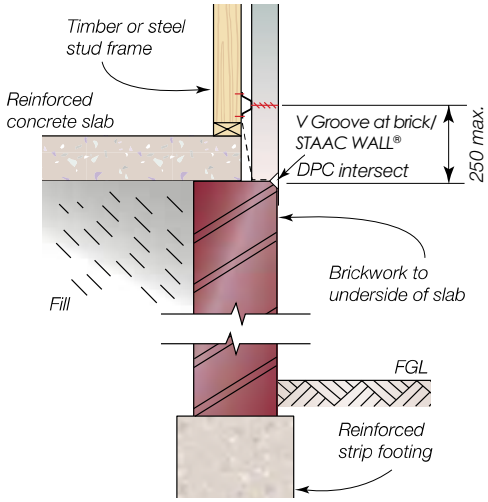

Figure 17.4.4 Junction to masonry dwarf wall

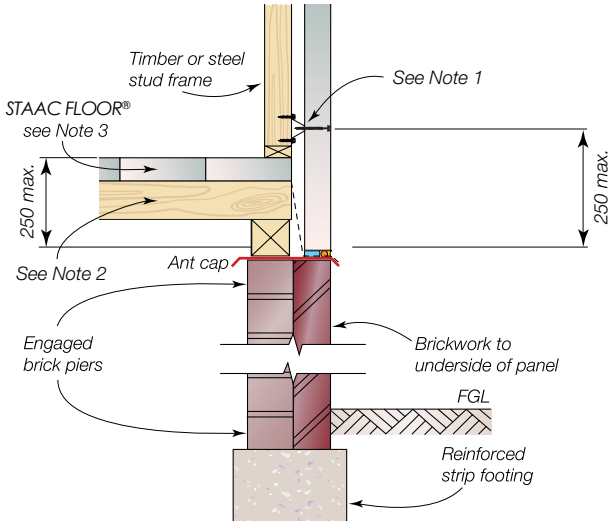

NOTE:

1. Do not fix top hat to floor joists.
2. If non-shrink floor joists are used, gap may be reduced or eliminated. Seek further technical advice from the framing manufacturer.
3. Refer to 75mm STAAC FLOOR® manual for floor details.
4. Refer AS 3660 for termite protection.
5. When fixing batten to concrete, contact the fixing manufacturer for details.
6. Refer to Table 9.6 for top hat requirements for deep concrete edge beam applications.

Figure 17.4.5 Junction to existing piers/stumps

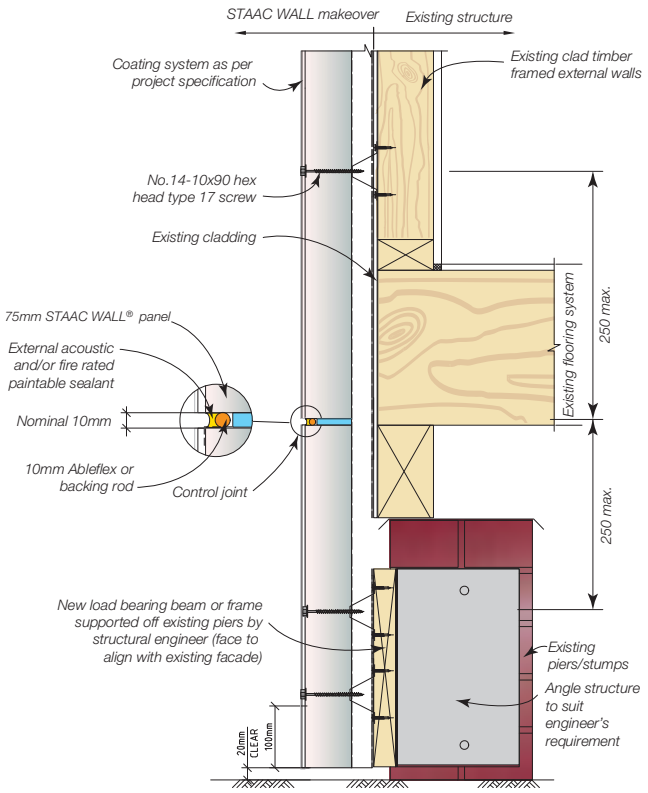

NOTE

1. Refer to Tables 9.3 and 9.5 for wall batten requirement for suspended applications
2. This detail is not considered to achieve a fire rating level
3. This slab edge detail does not comply with the termite visible inspection zone requirements. Alternate termite management systems must be used when selection this detail. It is the responsibility of the builder to provide a suitable physical or chemical barrier in accordance with AS 3660.

Figure 17.4.7 Base detail suspended floor – pier connection

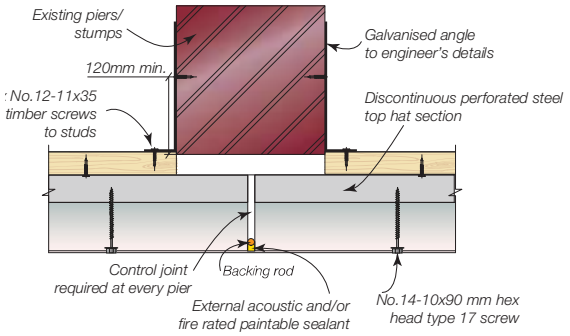

Figure 17.4.6 Junction to shallow concrete edge beam (Achieves FRL 180/180/180 when installed as part of the wall system. See Section 10)

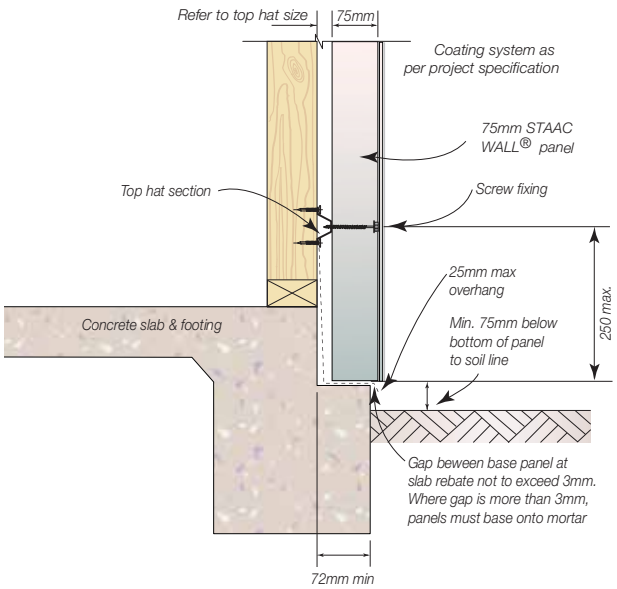

NOTE:

1. All garden beds and /or finished soil line must remain a minimum of 75mm below the bottom of the finished rendered wall.
2. This slab edge detail does not comply with the termite visible inspection zone requirements. Alternate termite management systems must be used when selecting this detail. It is the responsibility of the builder to provide a suitable physical or chemical barrier in accordance with AS 3660.

Figure 17.4.8 Junction to steel angle

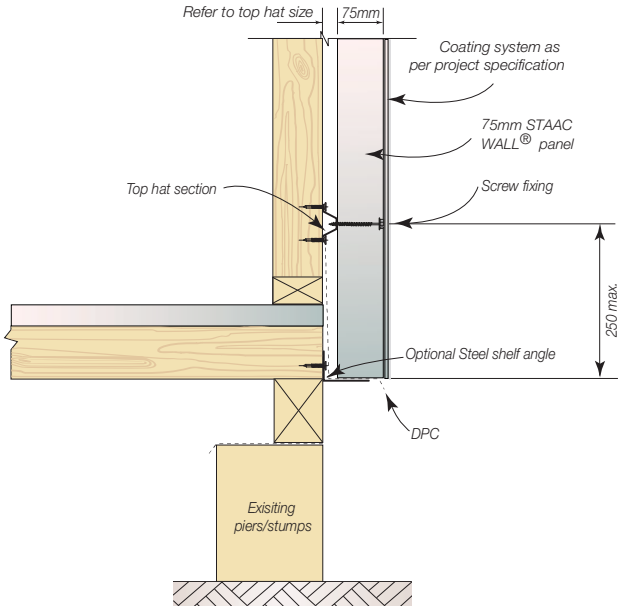

NOTE:

1. This detail is not considered to achieve a fire rating level.
2. The light guage steel angle is for the purpose of closing the cavity at the base of the wall.

17.5 WALL JUNCTION DETAILS & SECTIONS

Figure 17.5.1 Typical roof eaves detail - Option 1

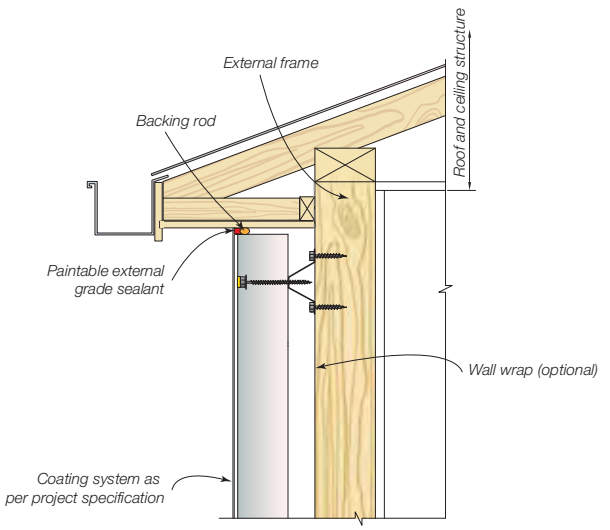

Figure 17.5.2 Typical roof eaves detail - Option 2

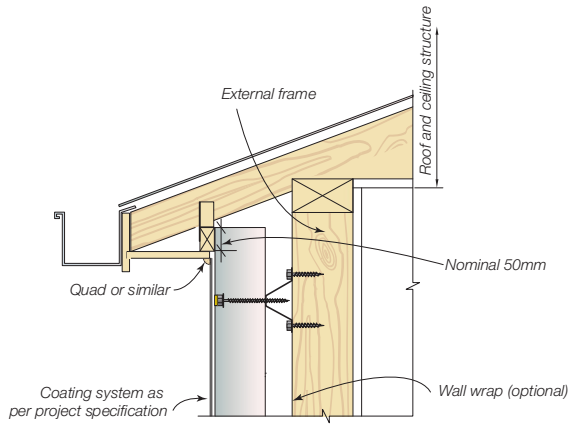

Figure 17.5.3 Roof to wall junction detail – Option 1

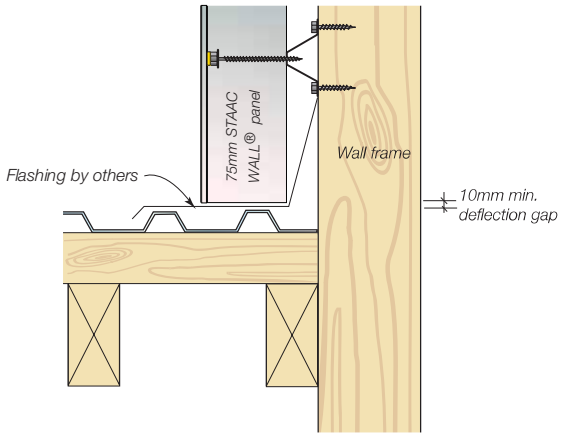

Figure 17.5.4 – Roof to wall junction detail – Option 2

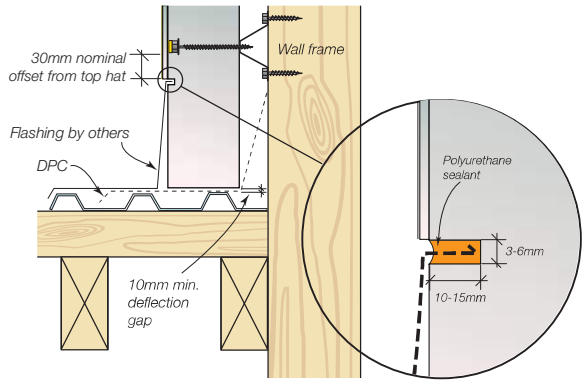

Figure 17.5.5 Typical roof eaves detail for zero boundary wall systems (Achieves FRL 90/90/90 when installed as part of the wall system. See Section 10)

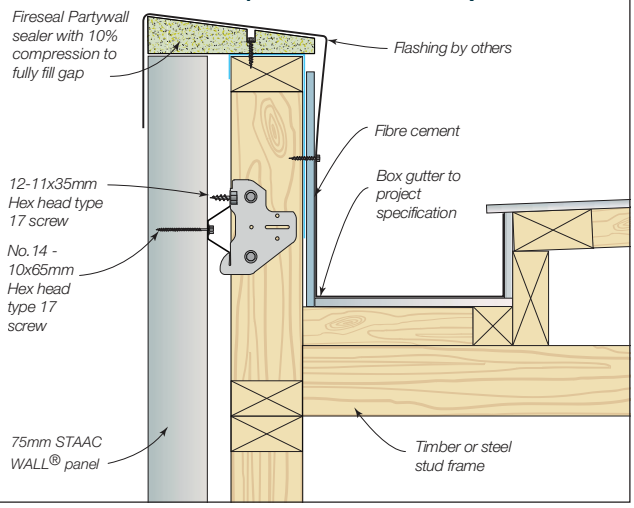

Figure 17.5.6 Balcony detail

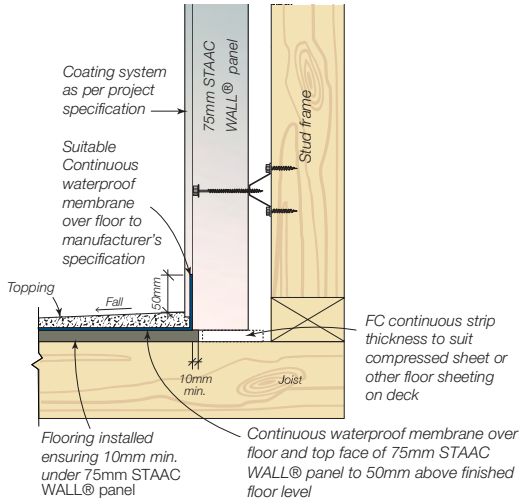

Figure 17.5.7 Zero boundary wall detail to 75mm STAAC WALL® external wall system (Achieves FRL 90/90/90 when installed as part of the wall system. See Section 10)

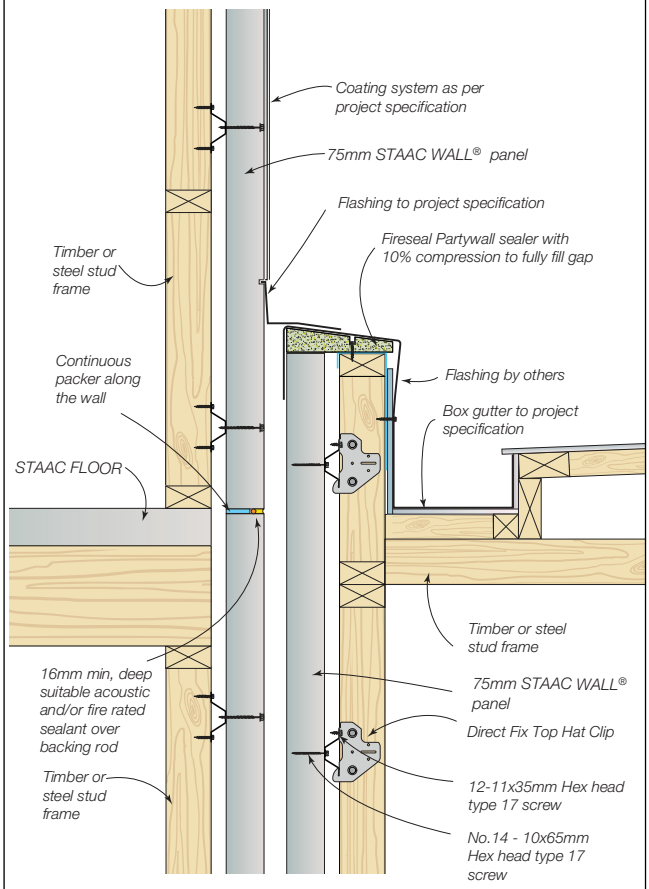

Figure 17.5.8 Zero boundary wall detail to brick veneer (Achieves FRL 90/90/90 when installed as part of the wall system. (See Section 10)

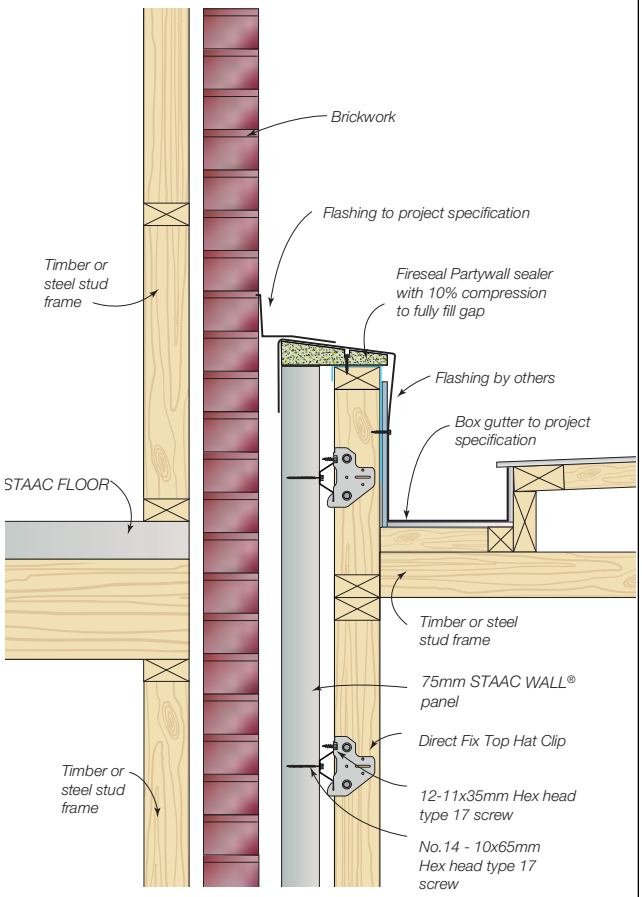

Figure 17.5.9 Parapet capping

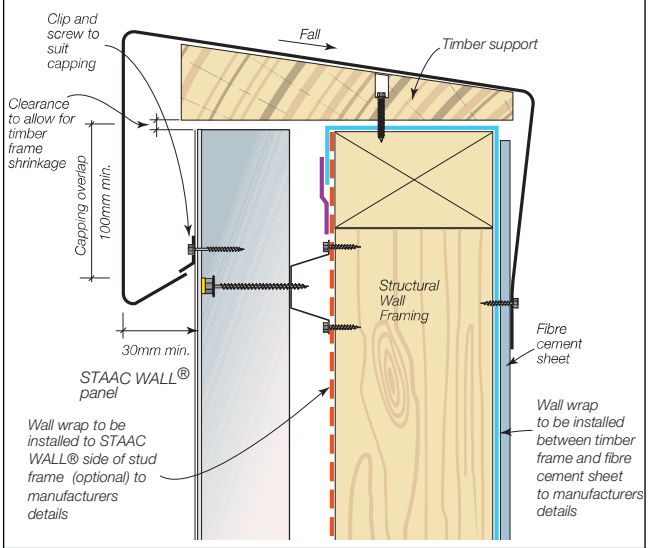

NOTE: Parapet capping shall be designed and fastened in accordance with SAA - HB39 2015 - Installation Code for Metal Roofing and Wall Cladding. Stop ends shall be incorporated to all flashings.

Figure 17.5.10 STAAC WALL® to pitched roof junction

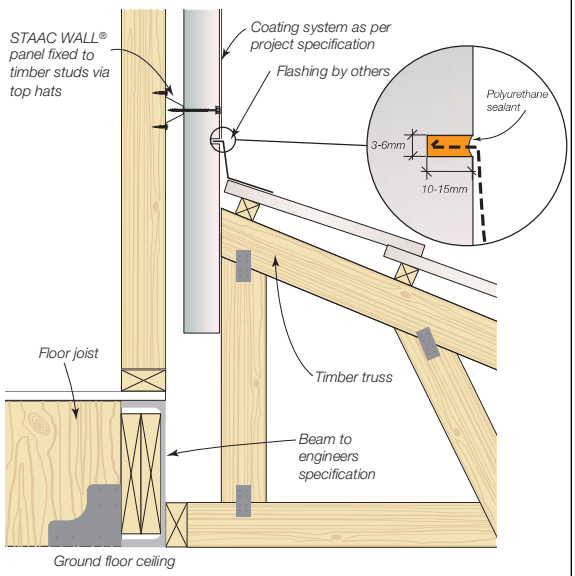

Note: 75mm STAAC WALL® panels are suspended from frame.

Figure 17.5.11 Gable end wall detail

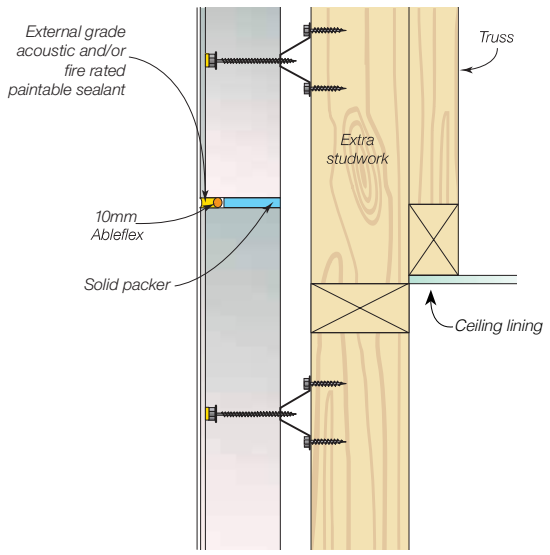

Figure 17.5.12 Gable end wall detail - lintel panel over window

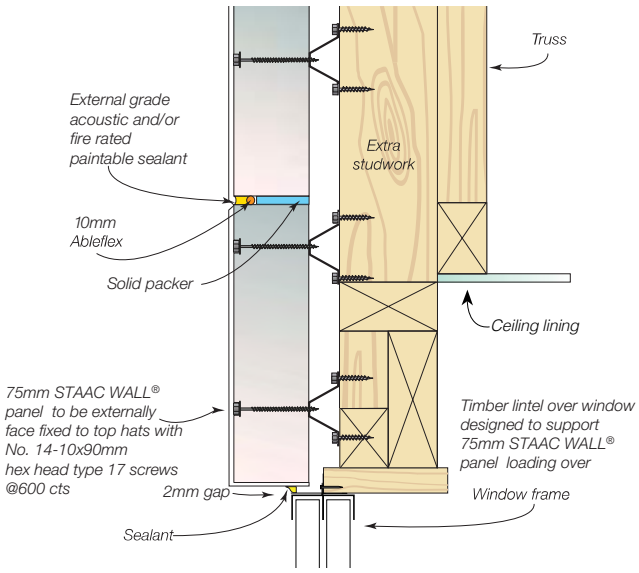

Figure 17.5.13 Beam penetration detail

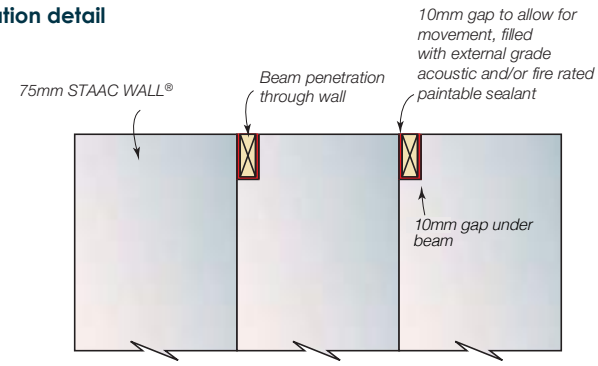

Figure 17.5.14 Column detail (glued and screwed)

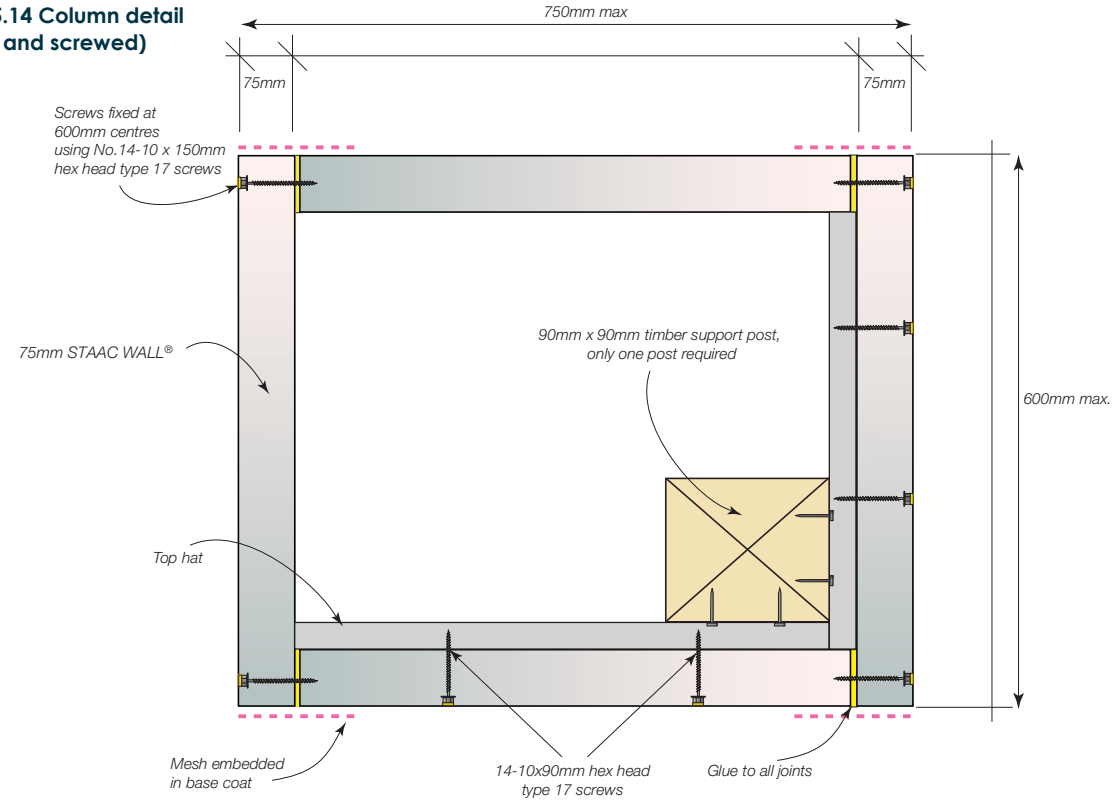

NOTE: Additional framing is required for column dimensions exceeding 600mm x 750mm

17.6 CONTROL JOINT DETAILS

Figure 17.6.1 Internal corner (Achieves FRL -/120/120 when installed as part of the wall system. See Section 10)

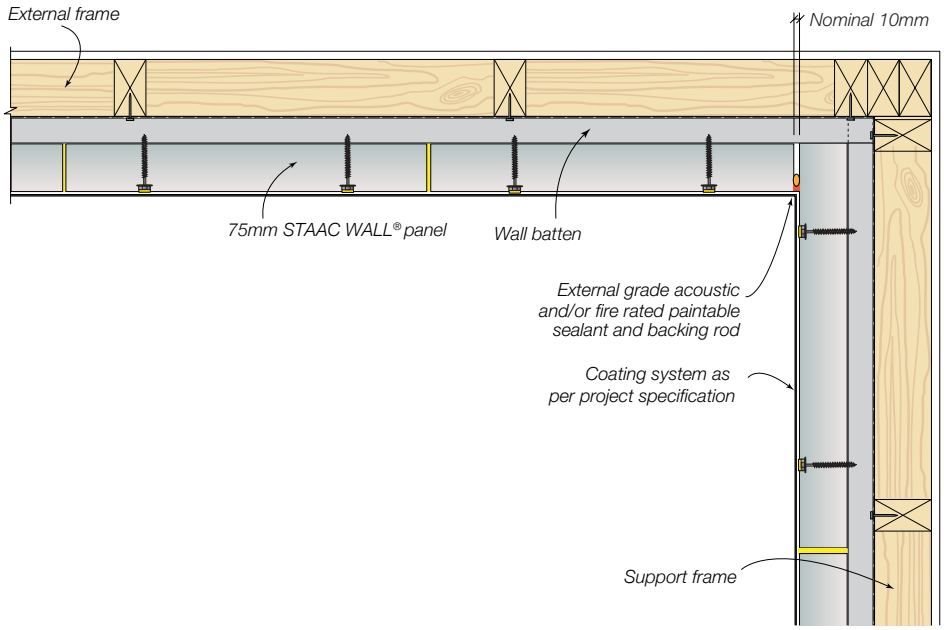

Figure 17.6.2 External corner (Achieves FRL -/120/120 when installed as part of the wall system. See Section 10)

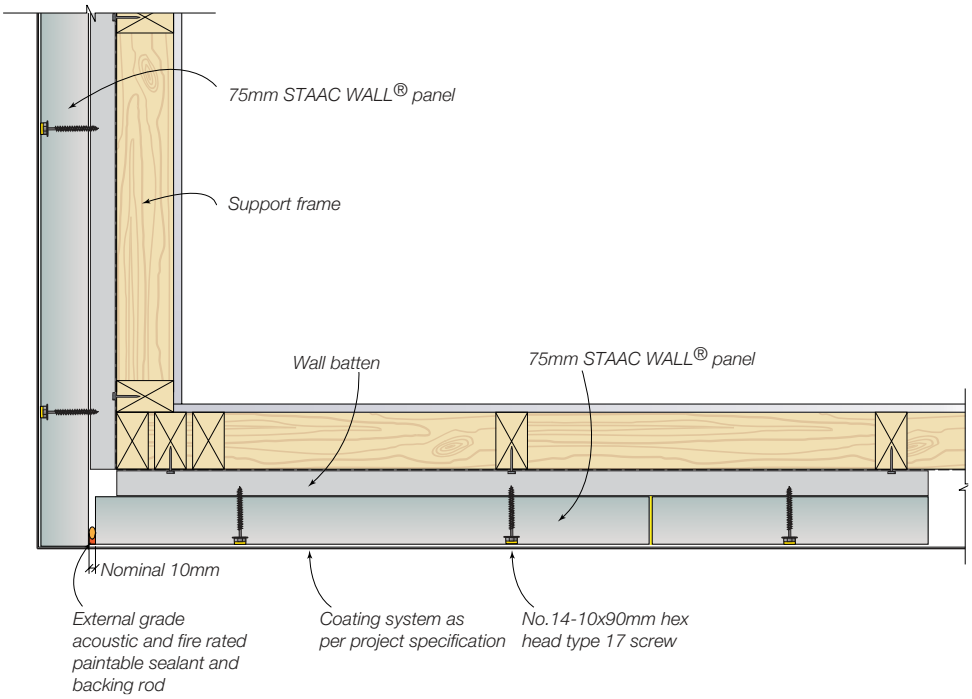

Figure 17.6.3 Typical detail for control joints positioned on corner

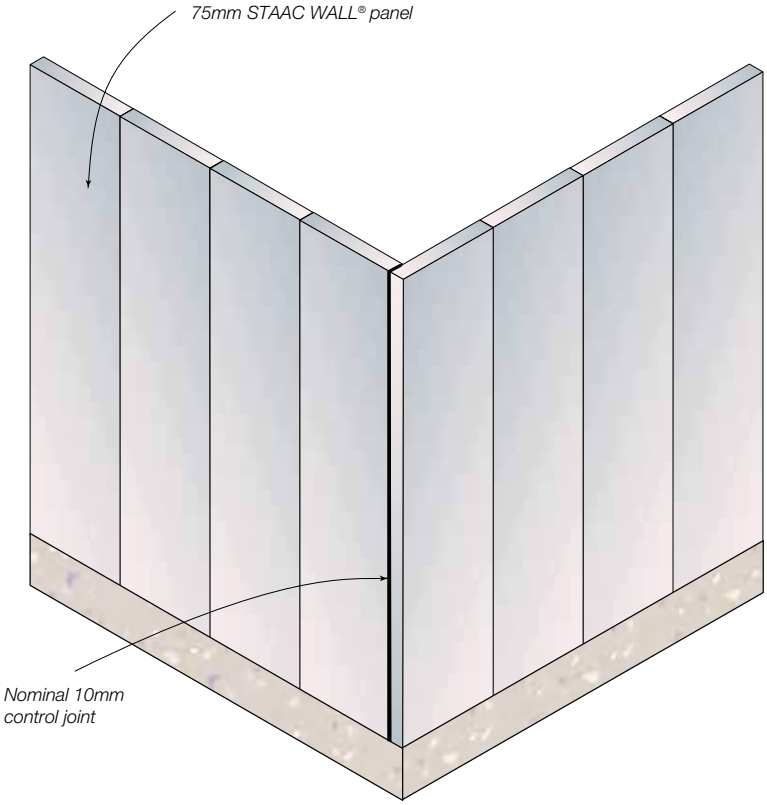

Figure 17.6.4 Typical detail for control joints positioned away from a corner

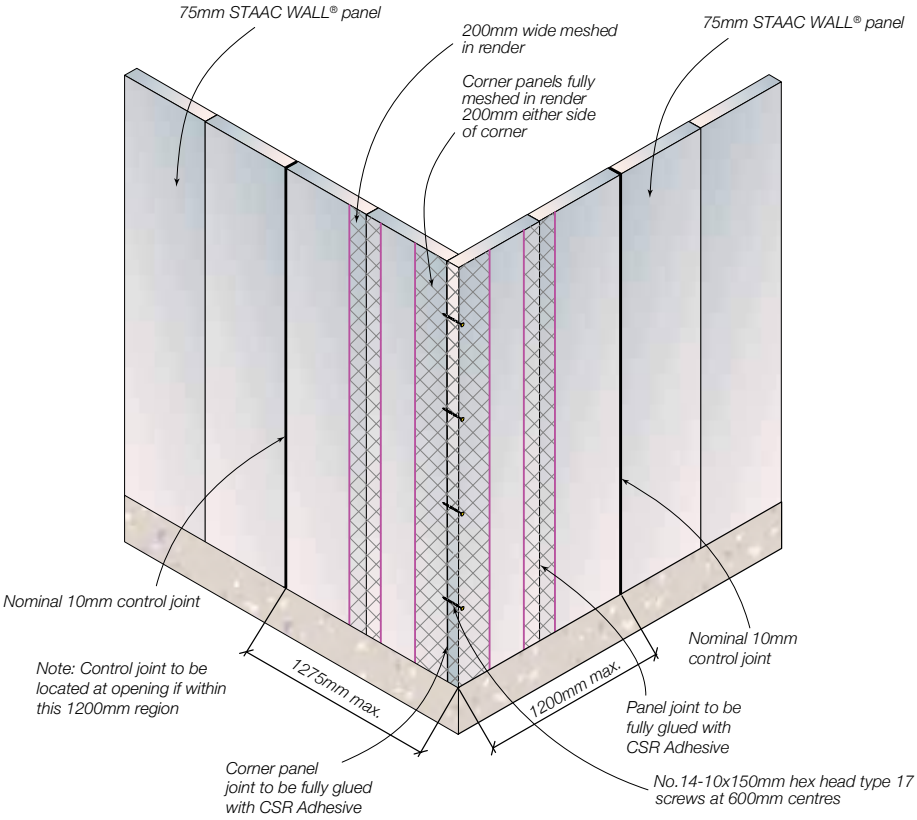

Figure 17.6.5 Typical horizontal control joint – engineered timber or steel frame (Achieves FRL -/120/120 when installed as part of the wall system. (See Section 10)

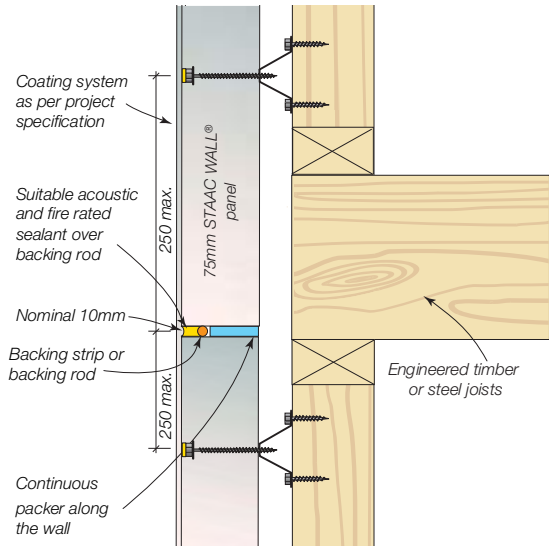

Figure 17.6.6 Horizontal control joint - Cavity brickwork to 75mm STAAC WALL® panel

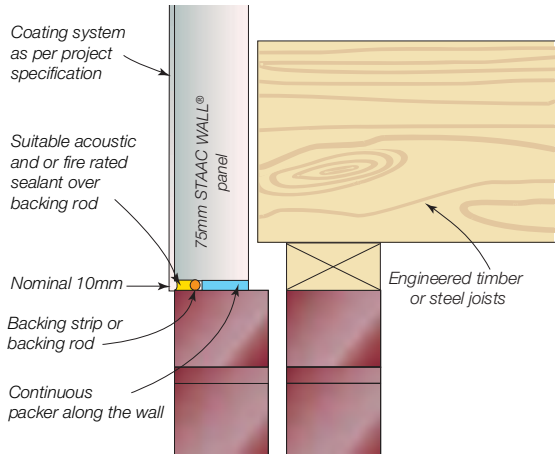

Figure 17.6.7 Horizontal control joint – Brick veneer to 75mm STAAC WALL® panel - Option 1

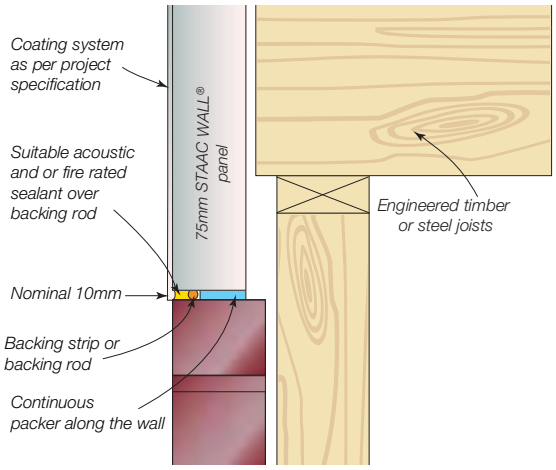

Figure 17.6.8 Horizontal control joint – Brick veneer to 75mm STAAC WALL® panel - Option 2

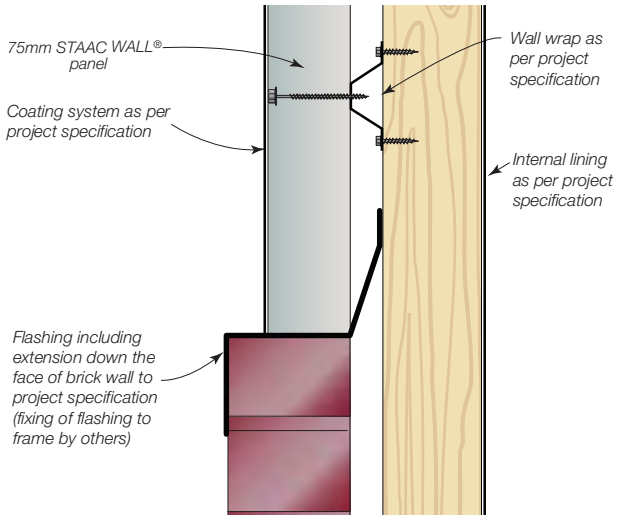

Figure 17.6.9 Typical vertical control joint (Achieves FRL -/120/120 when installed as part of the wall system. (See Section 10)

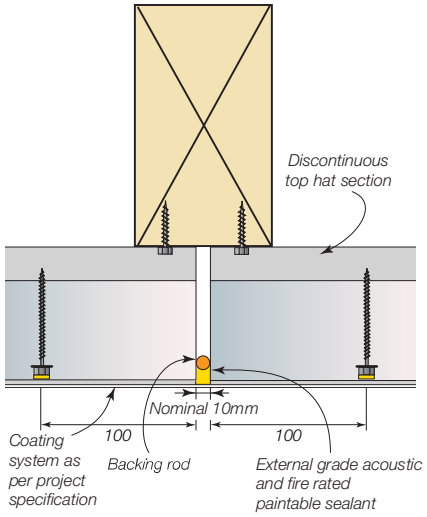

Figure 17.6.10 Typical vertical control joint with double studs (Achieves FRL -/120/120 when installed as part of the wall system. (See Section 10)

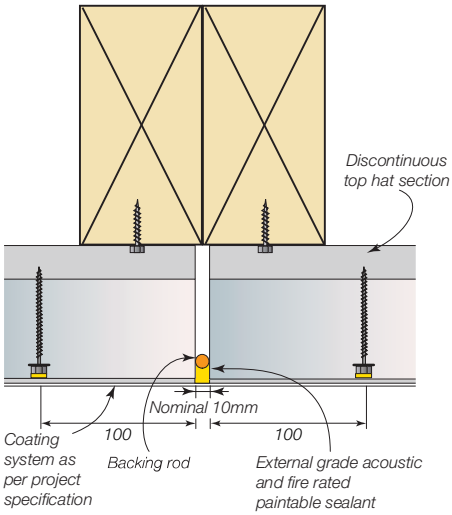

Figure 17.6.11 Control joint - discontinuous top hats on a single stud

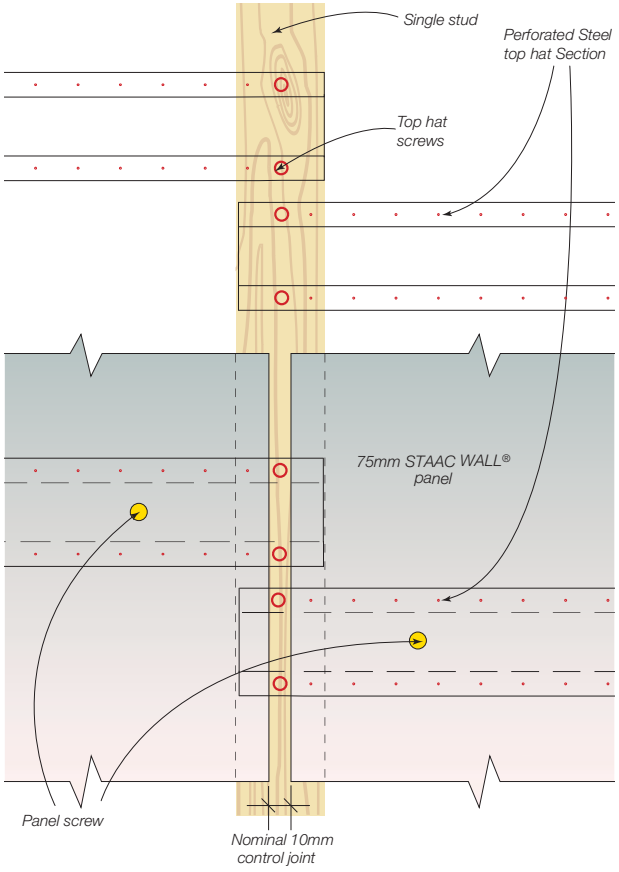

Figure 17.6.12 Typical window control joint detail - lintel over

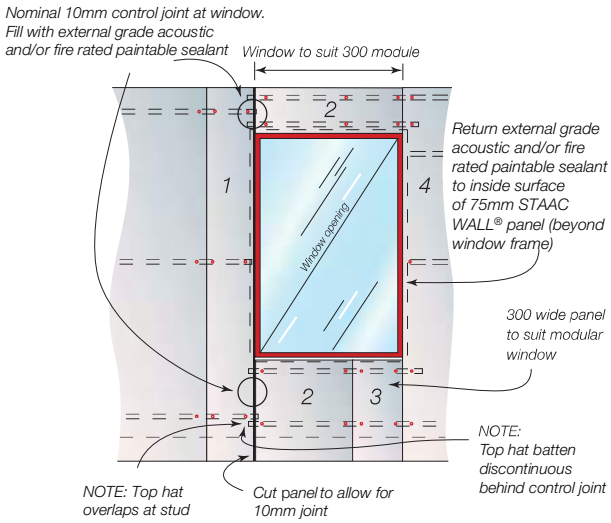

NOTE: The installation sequence of the 75mm STAAC WALL® panels around the openings should be followed as numbered if there is no control joint at the opening, to maintain glue thickness on the edge of the panel.

17.7 DOOR & WINDOW DETAILS

Figure 17.7.1 Typical window sill detail – aluminium window frame – Option 1

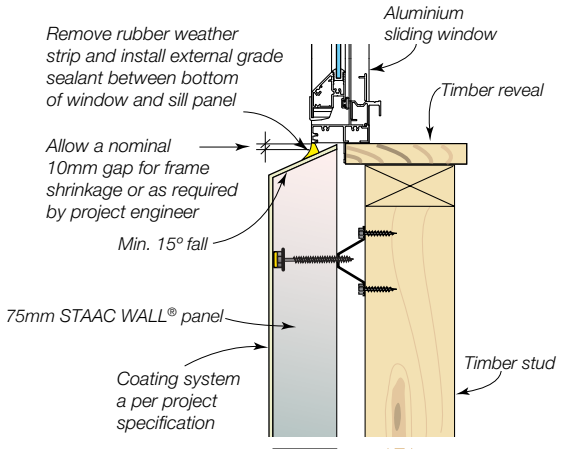

NOTE: Include suitable backing rod and sealant for 5-10mm gaps.

Figure 17.7.2 Typical window sill detail – aluminium window frame – Option 2

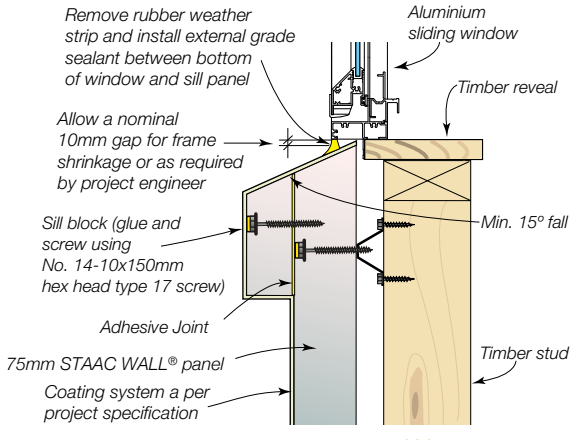

NOTE: Include suitable backing rod and sealant for 5-10mm gaps.

Figure 17.7.3 Typical window sill detail – aluminium window frame – Option 3

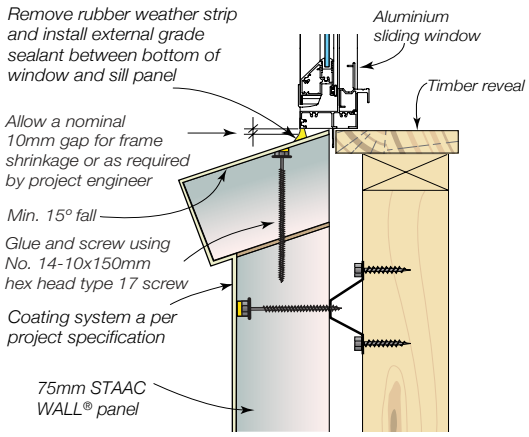

NOTE: Include suitable backing rod and sealant for 5-10mm gaps.

Figure 17.7.4 Header detail

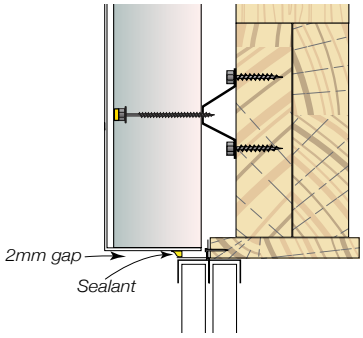

NOTE: Drainage of window and door sills, in either aluminium or timber, should be directed to the outside of the building, on top of the window sill.

Figure 17.7.5 Garage head detail

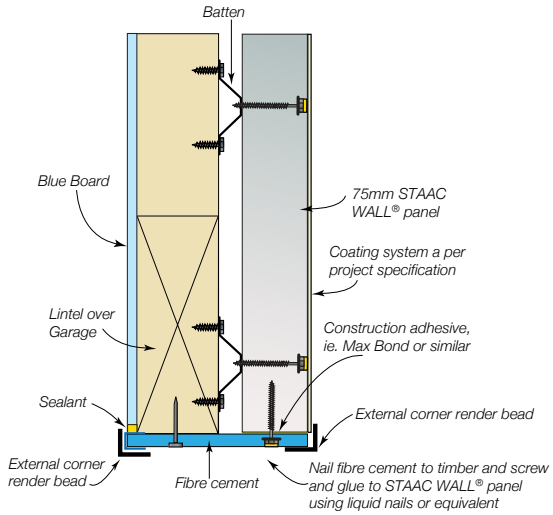

Figure 17.7.6 Garage door – jamb detail – Option 1

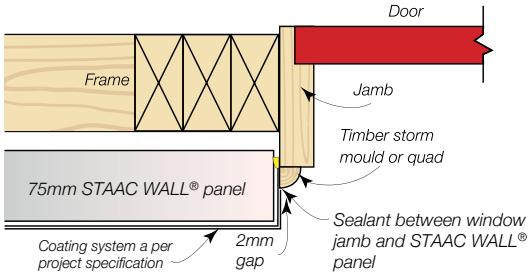

Figure 17.7.7 Garage door – jamb detail – Option 2

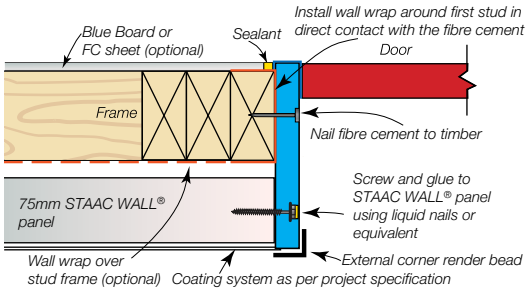

Figure 17.7.8 Sliding door sill detail – Concrete sill < 270mm

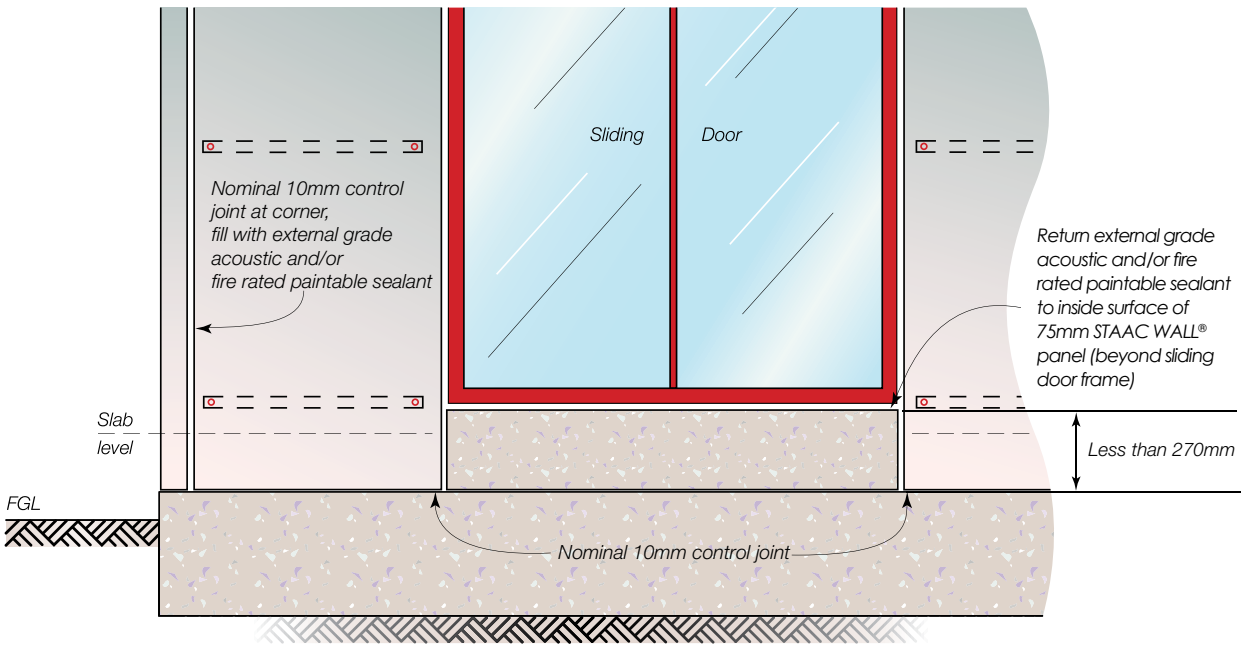

Figure 17.7.9 Sliding door sill detail – section view - 75mm STAAC WALL® sill > 270mm

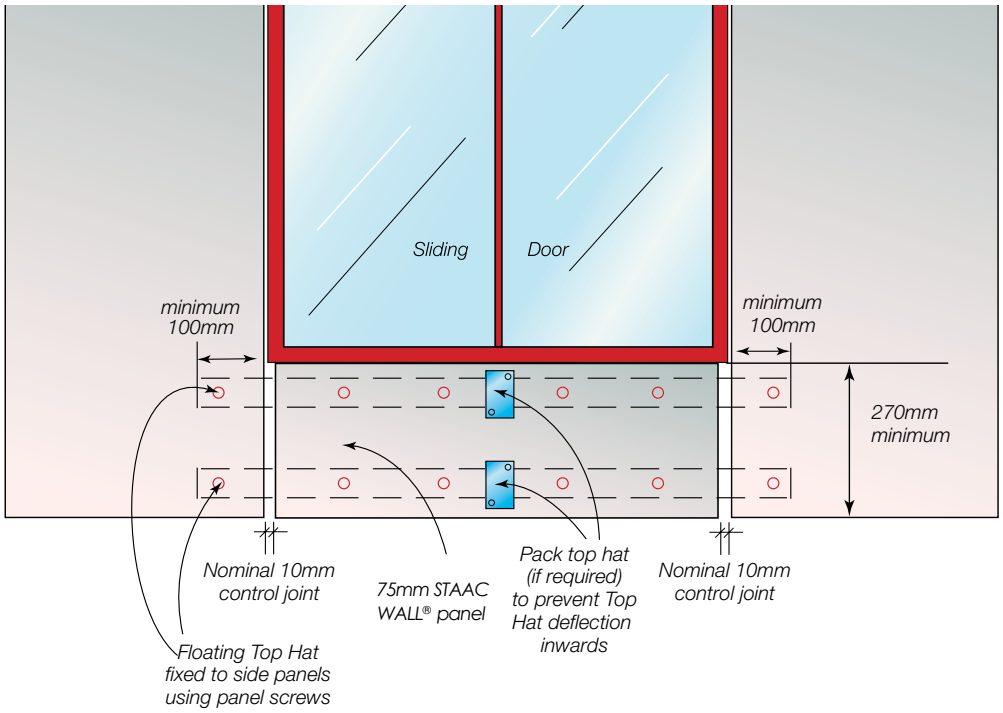

NOTE: Consider a min. 15° fall for door sill.

16.8 MISCELLANEOUS DETAILS

Figure 17.8.1 Panel layout drawing – Plan view

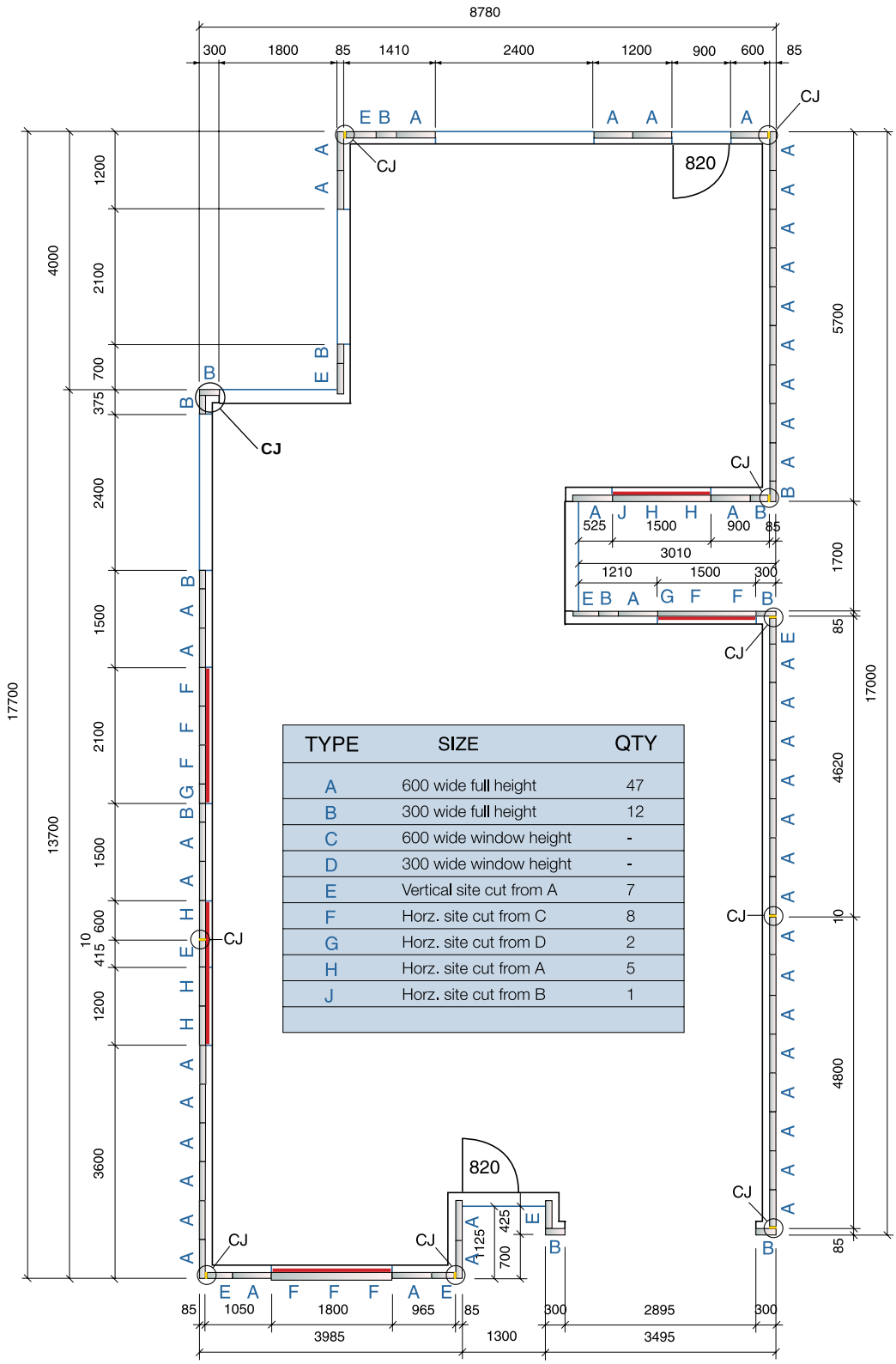

TYPE	SIZE	QTY
A	600 wide full height	47
B	300 wide full height	12
C	600 wide window height	-
D	300 wide window height	-
E	Vertical site cut from A	7
F	Horz. site cut from C	8
G	Horz. site cut from D	2
H	Horz. site cut from A	5
J	Horz. site cut from B	1

NOTE:

1. At corners, panels can be laid out at 300mm multiples in one direction and 300mm multiples + 85mm in the other direction
2. Width of panels may vary + or - 1.5mm

18. APPENDIX: REFERENCING CODES AND STANDARDS

- AS 2870:2011 – Residential slabs and footings
- AS 3566.1:2002 – Self-drilling screws for the building and construction industries Part 1: General requirements and mechanical properties
- AS 3959:2018 – Construction of buildings in bushfire-prone areas
- AS 3660 Suite - Termite Management
- AS 4200.1:2017 – Pliable building membranes and underlays Materials
- AS 4200.2:2017/Amdt 1:2018 Pliable building membranes and underlays Installation
- AS 5146.1:2015 – Reinforced Autoclaved Aerated Concrete Part 1: Structures (Incorporating Amendment No.1)
- AS 5146.2:2018 – Reinforced Autoclaved Aerated Concrete Part 2: Design
- AS 5146.3:2018 – Reinforced Autoclaved Aerated Concrete Part 3: Construction
- AS/NZS 1170.2:2021 – Structural design actions Wind actions
- AS/NZS 1336:2014 – Eye and face protection – Guidelines
- AS/NZS 1715:2009 – Selection, use and maintenance of respiratory protective equipment
- AS/NZS 1716:2012 – Respiratory protective devices
- AS/NZS 4600:2018 – Cold-formed steel structures
- AS/NZS 4859.1:2018 – Thermal insulation materials for buildings General criteria and technical provisions
- ISO 9223:2012 – Corrosion of metals and alloys - Corrosivity of atmospheres -- Classification, determination and estimation
- NASH Hand book – Design of residential & low-rise steel framing
- NASH Standard – Residential and low-rise steel framing Part 1: Design Criteria
- NASH Standard – Residential and low-rise steel framing Part 2: Design Solutions
- National Construction Code 2022 Volume One: Building Code of Australia - Class 2 to Class 9 Buildings
- National Construction Code 2022 Volume Two & Housing Provisions - Class 1 and 10 Buildings

37 Gravel Pit Rd, Darra QLD 4076
P. (07) 3725 5935 / stoddartgroup.com.au

DISCLAIMER
Information presented in this document is supplied in good faith and to the best of our knowledge was accurate at the time of preparation. The provision of this information should not be construed as a recommendation to use any of our products in violation of any patent rights or in breach of any statute or regulation. Users are advised to make their own determination as to the suitability of this information in relation to their particular purpose or specific circumstances. Since the information contained in this document may be applied under conditions beyond our control, no responsibility can be accepted by Stoddart Group, or its staff for any loss or damage caused by any person acting or refraining from action as a result of misuse of this information.

STODDART®
GROUP