Printed circuit board - 90° DIN Sockets

A range of right -angled printed circuit board mounting DIN sockets
Which enable any DIN plug to be interfaced with a PCB.

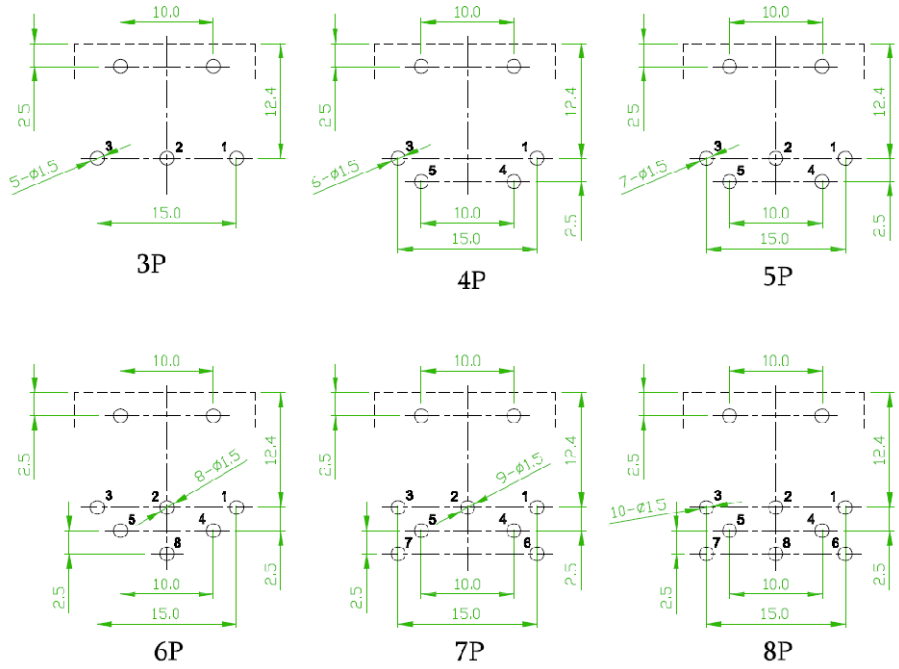

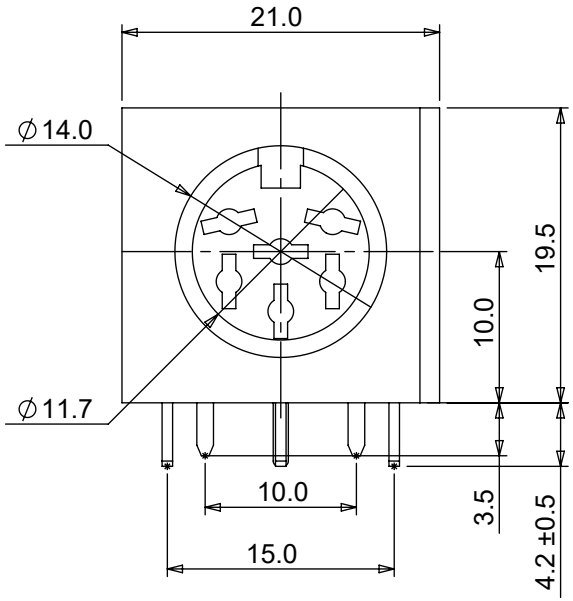

Example
6 way variation

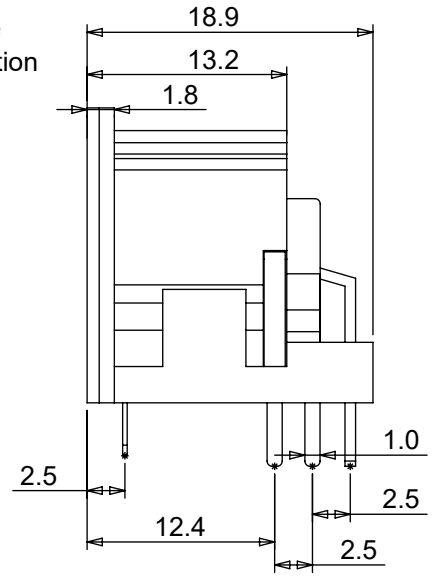

PART	MATERIAL	PLATED	REMARK
COVER	PBT-94V0		BLACK
HOUSING	PBT-94V0		BLACK
SLEEVE	H62	TIN	RoHS
CONTACT	H62	TIN	RoHS

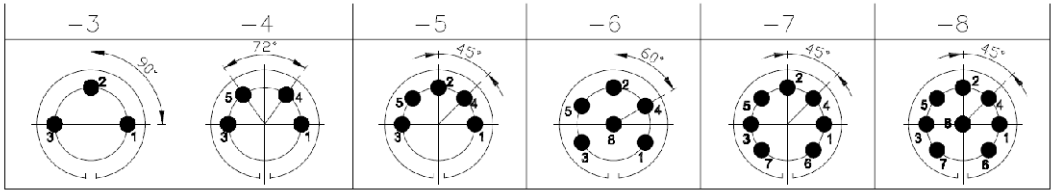

ELECTRICAL	
Rated Voltage	100V AC
Current Rating	2A
Contact Resistance	100M Ω
CLIMATIC	
Operating Temperature	-20°C to +70°C
MECHANICAL	
Insertion/Extraction Force	0.5kgf - 5.0kgf

PART No	PIN VARIATION	DESCRIPTION
671-0301	3 WAY	90°PCB MOUNT
671-0401	4 WAY	90°PCB MOUNT
671-0501	5 WAY	90°PCB MOUNT
671-0601	6 WAY	90°PCB MOUNT
671-0701	7 WAY	90°PCB MOUNT
671-0801	8 WAY	90°PCB MOUNT

DELTRON Components
DELTRON Enclosures
ROXBURGH EMC
b·e·s
DEM
Alpha3 manufacturing
+44(0)1724 273200
www.dem-uk.com

PROPRIETARY AND CONFIDENTIAL:
THE INFORMATION CONTAINED IN THIS DRAWING IS THE SOLE PROPERTY OF **ALPHA 3 MANUFACTURING**. ANY REPRODUCTION IN PART OR AS A WHOLE WITHOUT THE WRITTEN PERMISSION OF **ALPHA 3 MANUFACTURING** IS PROHIBITED.
DEM Manufacturing is a division of Alpha 3 Manufacturing LTD
DEM Manufacturing, Deltron Emcon House, Hargreaves Way, Sawcliffe Ind. Park, Scunthorpe, North Lincolnshire, DN15 8RF, UK

UNLESS OTHERWISE SPECIFIED DIMENSIONS ARE IN MILLIMETRES
LINEAR & RADIAL TOLERANCE:
GENERAL SPECIFICATION ONLY

IF IN DOUBT ASK! DO NOT SCALE DRAWING!

FINISH	SEE TABLE	AUTHOR	DT
MATERIAL	SEE TABLE	EDITOR	DT
		APPROVER	DT

THE FINISHED PRODUCT SHOULD BE CLEAN AND FREE FROM ALL LIQUIDS AND DEBRIS. SURFACES SHOULD BE OF UNIFORM APPEARANCE FREE FROM SHARP EDGES, BURRS AND CORROSION

THIRD ANGLE PROJECTION | SHEET 1 OF 1 | SCALE 2:1 | A4

TITLE	671/01 - SERIES		
FILE	671- SERIES		
PART	PCB - DIN SOCKET		
ISSUE/REV.	003	EDIT DATE	09/04/2024
	RELEASED	RELEASE DATE	09/04/2024