SAS International

MBS Architectural

SAS205

Overview

SYSTEM GROUP	GRID
Suspended Ceiling	Concealed Grid SAS J-Bar suspension

TILE	
Hook-on	Square edge

ACOUSTICS	
A–D	**15-41dB**
Absorption class	Insulation

ACCESS	SYSTEM WEIGHT	LIFE EXPECTANCY
Full – Lift and swing down	**9kg/m²** Approx. Based on 1200 x 300mm tiles 30mm deep*	**25yr** In excess of

***Note** This includes the entire system and full associated components (suspension, tile, acoustic pad and associated fixings.)

SAS**205**

SAS205 is a SAS200 variant, designed specifically for corridor applications. The suspended ceiling system is supported at it perimeters, up to a maximum of 3000mm widths.

Areas requiring frequent access for maintenance, such as hospitals, residential-blocks and hotels are ideal applications. SAS205 is also commonly specified for commercial offices to blend seamlessly with other SAS suspended ceiling systems.

Module Sizes
There are no standard tile sizes for SAS205. Tiles can be up to 3000mm in length and no less than 300mm wide. Bespoke module sizes and shapes are available on request.

Access
Swing down and hang. Tiles can pivot on one edge to hang in place, offering full void access while keeping tiles safe from harm. This access method is subject to corridor height and width.

Finishes
SAS205 is available in all standard SAS finishes, please refer to page 105. Bespoke finishes are available on request.

Perforations
SAS205 can be manufactured with any standard SAS perforation. For our full range of perforations, please refer to page 83. Bespoke perforations are also an option.

Acoustic Materials
16mm deep, 80Kg density mineral wool pad with black tissue face, foil back and sides. Other acoustic materials are available, please refer to page 20.

Service Integration
Tiles can be formed with apertures during manufacturing and post painted for integration with lights and other services.

Please note Loads in excess of 6Kg require independent suspension.

Technical Support
Please contact our technical team for all questions relating to access, security, bespoke features, service integration or load support.

SAS**205**

Perspective Drawing

1 Closure Angle Support
2 J-Bar
3 SAS 205 Tile

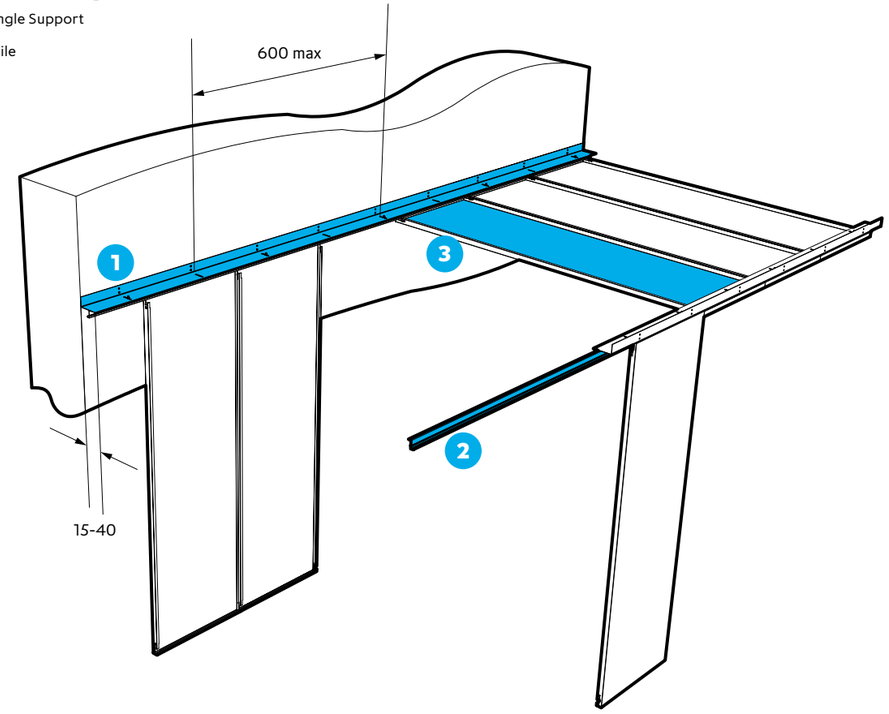

Section drawing

Overall construction depth

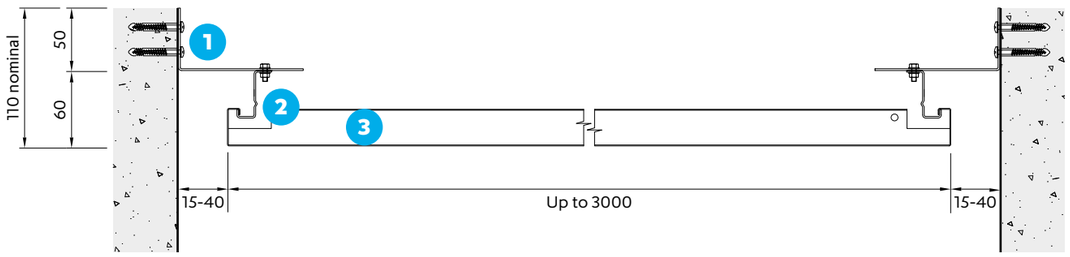

Swing Down Tile

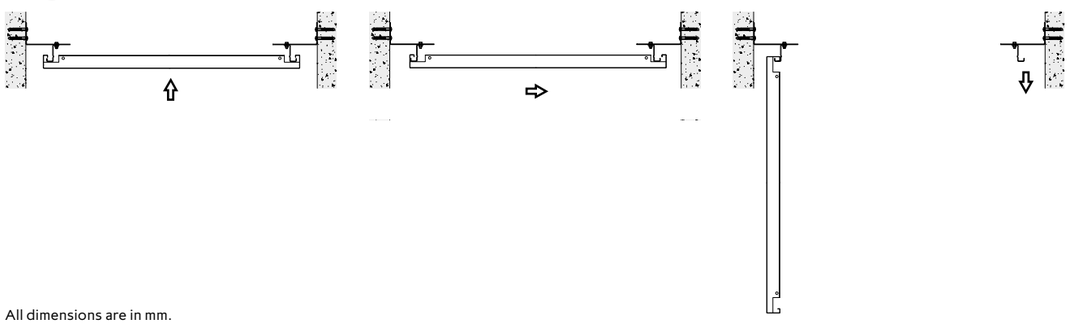

All dimensions are in mm.

SAS**205**

Hospital General de Asturias, Oviedo

Location
Oviedo, Spain
Architect
Herraiz Arquitectura, S.L./Navarro Baldeweg Asociados S.L.P

Contractor
Constructora San Jose/ Sacyr Vallehermoso/ UTE Huca
Purpose
Healthcare

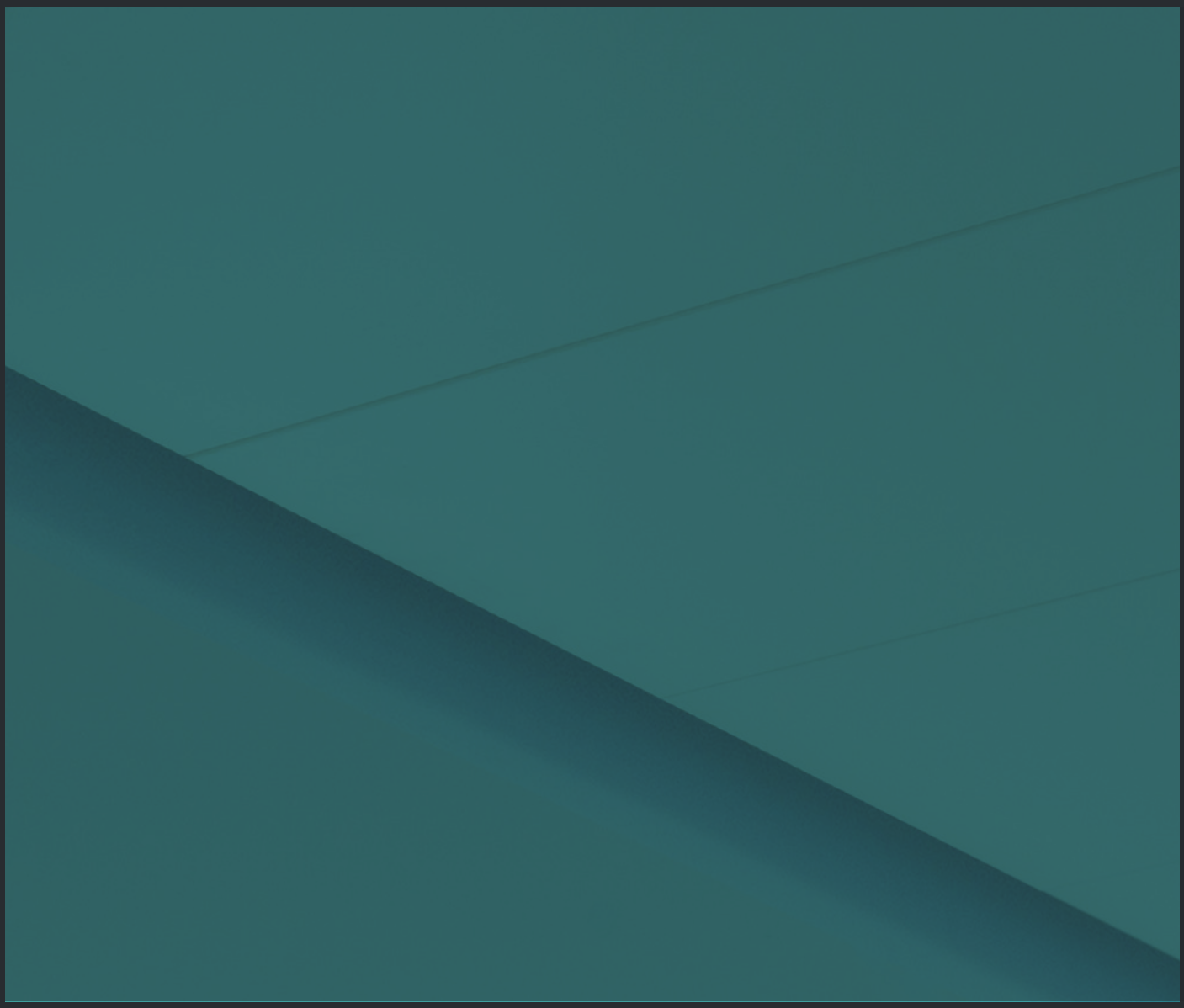

MBS
Architectural

INSPIRED BY QUALITY.
DRIVEN BY INNOVATION.

Architectural Ceiling & Wall Systems

Reach out to our team for support, samples and advice.
hello@mbsarchitectural.com.au | mbsarchitectural.com.au

VIC
03 9580 7800
7 Haymer Court
Braeside 3195

QLD
07 2116 0717
13 Pease Court
Bethania 4205