# ADJUSTABLE OPEN SPELTER SOCKETS

MORE PRODUCT INFO

## WITH PIN

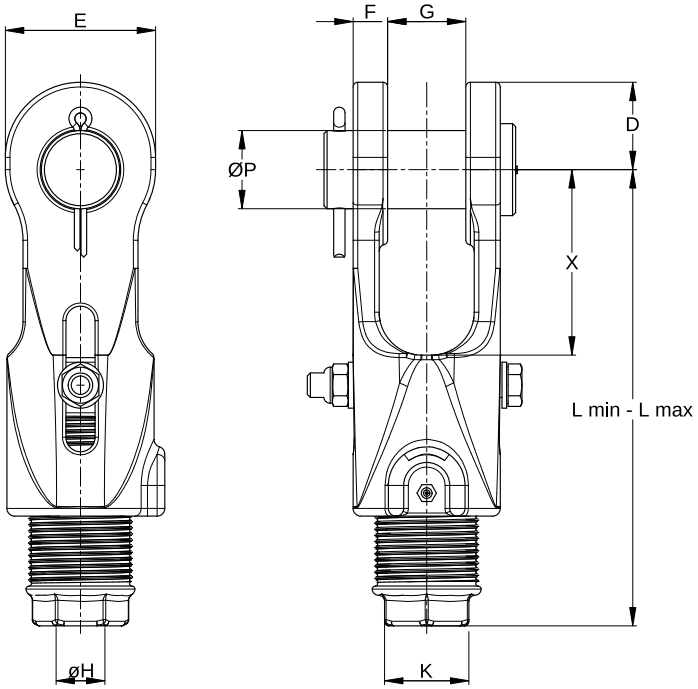


## WITH BOLT

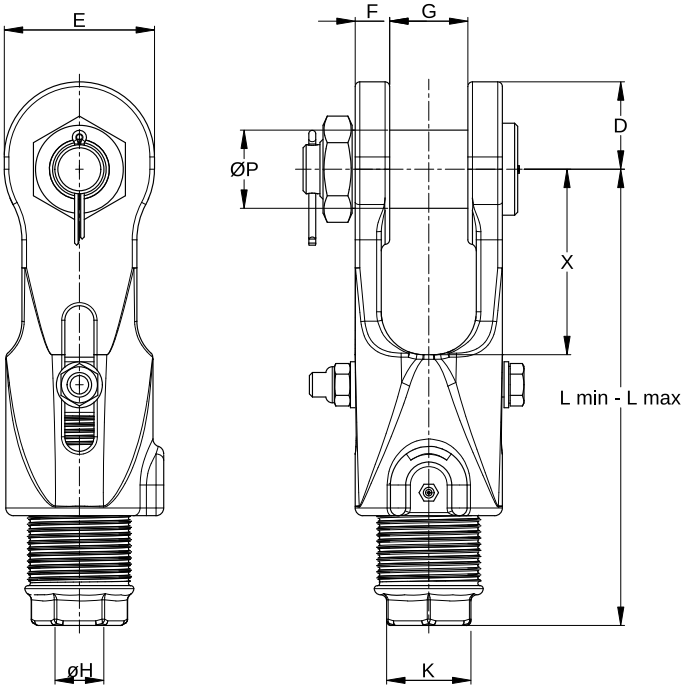


METRIC

| MODEL NUMBER | MBL (MTONS) | WIRE ROPE Ø (MM) | APPROX. RESIN VOLUME (CC) | DIMENSIONS (MM) | | | | | | | | | | | WEIGHT (KG) |
|---|---|---|---|---|---|---|---|---|---|---|---|---|---|---|---|
| | | | | D | E | F | G | ØH | K | ØP | X | L MIN | L MAX | ADJUSTMENT RANGE | |
| **AOSS 800** | 40 | 18 - 19 | 80 | 45 | 74 | 16.5 | 38 | 22.5 | 41 | 35 | 90 | 185 | 240 | 55 | 5 |
| **AOSS 804** | 55 | 20 - 22 | 125 | 53 | 90 | 20.5 | 45 | 26.8 | 50 | 41 | 100 | 207 | 272 | 65 | 8 |
| **AOSS 808** | 80 | 23 - 26 | 160 | 57 | 98 | 22.5 | 51 | 29.5 | 55 | 51 | 120 | 245 | 320 | 75 | 12 |
| **AOSS 811** | 100 | 27 - 30 | 210 | 67 | 114 | 25 | 57 | 34 | 65 | 57 | 130 | 280 | 380 | 100 | 17 |
| **AOSS 815** | 130 | 31 - 36 | 350 | 77 | 135 | 28 | 63 | 40 | 75 | 63 | 150 | 325 | 415 | 90 | 23 |
| **AOSS 818** | 160 | 37 - 39 | 425 | 83 | 146 | 30 | 76 | 44.5 | 80 | 70 | 170 | 370 | 470 | 100 | 33 |
| **AOSS 820** | 200 | 40 - 42 | 500 | 89 | 156 | 33 | 76 | 48 | 90 | 76 | 180 | 400 | 510 | 110 | 40 |
| **AOSS 825** | 250 | 43 - 48 | 700 | 102 | 178 | 39 | 89 | 53 | 100 | 89 | 215 | 485 | 605 | 120 | 60 |

**MBL =** Minimum Breaking Load | **Mtons =** Metric tonnes | Assembly weights may vary depending on the selected configuration

**FINISH** Hot-dip galvanised with zinc-nickel plated components

GLOBAL ROPE FITTINGS
AQUALLINE PRODUCTS