ADJUSTABLE OPEN TURNBUCKLE SOCKETS

MORE PRODUCT INFO

WITH PIN

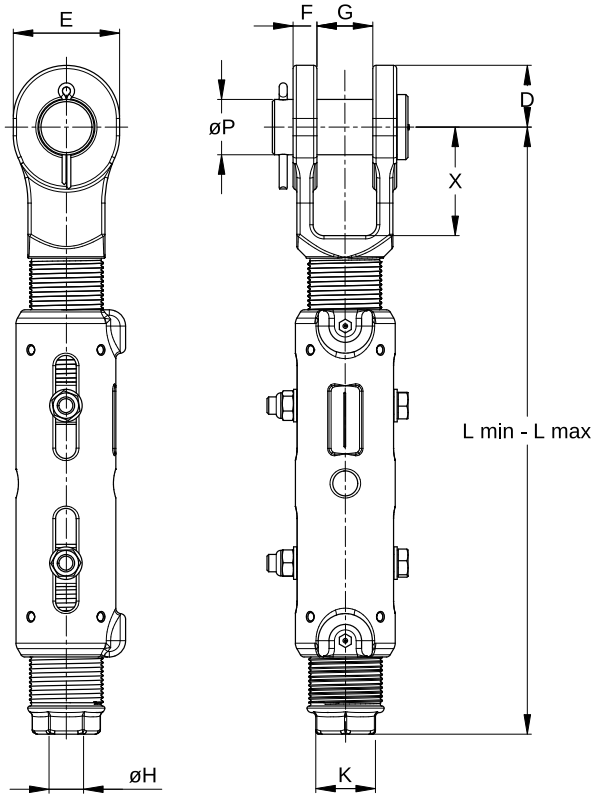

WITH BOLT

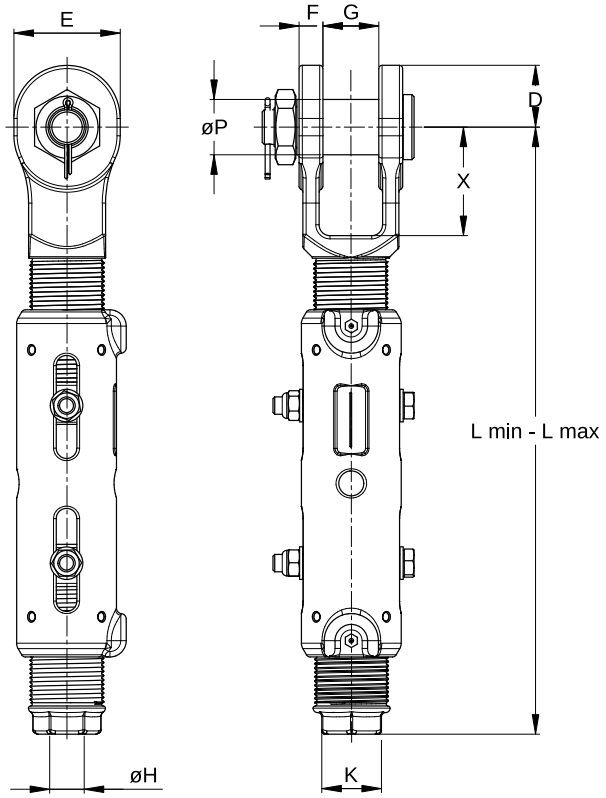

IMPERIAL

MODEL NUMBER	MBL (MTONS)	WIRE ROPE Ø (INCH)	APPROX. RESIN VOLUME (CC)	DIMENSIONS (INCH)											WEIGHT (LBS)
				D	E	F	G	ØH	K	ØP	X	L MIN	L MAX	ADJUSTMENT RANGE	
AOTS 800	40	3/4	80	1.77	2.91	0.65	1.50	0.89	1.61	1.38	2.17	13.39	17.72	4.33	19.2
AOTS 804	55	7/8	125	2.09	3.54	0.81	1.77	1.06	1.97	1.61	2.44	15.35	20.47	5.12	23.4
AOTS 808	80	1	160	2.24	3.86	0.89	2.01	1.16	2.17	2.01	3.94	18.31	25.20	6.89	38.1
AOTS 811	100	1 1/8	210	2.64	4.49	0.98	2.24	1.34	2.56	2.24	3.35	19.88	27.76	7.88	51.2
AOTS 815	130	1 1/4 - 1 3/8	350	3.03	5.31	1.10	2.48	1.57	2.95	2.48	3.74	23.62	31.10	7.48	84.7
AOTS 818	160	1 1/2	425	3.27	5.75	1.18	2.99	1.75	3.15	2.76	4.13	25.59	33.46	7.87	101.4
AOTS 820	200	1 5/8	500	3.50	6.14	1.30	2.99	1.89	3.54	2.99	4.53	27.56	36.22	8.66	127.9
AOTS 825	250	1 3/4 - 1 7/8	700	4.02	7.01	1.54	3.50	2.09	3.94	3.50	5.31	32.48	42.32	9.84	189.6

MBL = Minimum Breaking Load | **Mtons =** Metric tonnes | Assembly weights may vary depending on the selected configuration

FINISH Zinc-nickel plated with additional primer RAL 170 60 45 on connector tube

GLOBAL ROPE FITTINGS
AQUALLINE PRODUCTS