ANCHOR PENDANT SOCKETS

MORE PRODUCT INFO

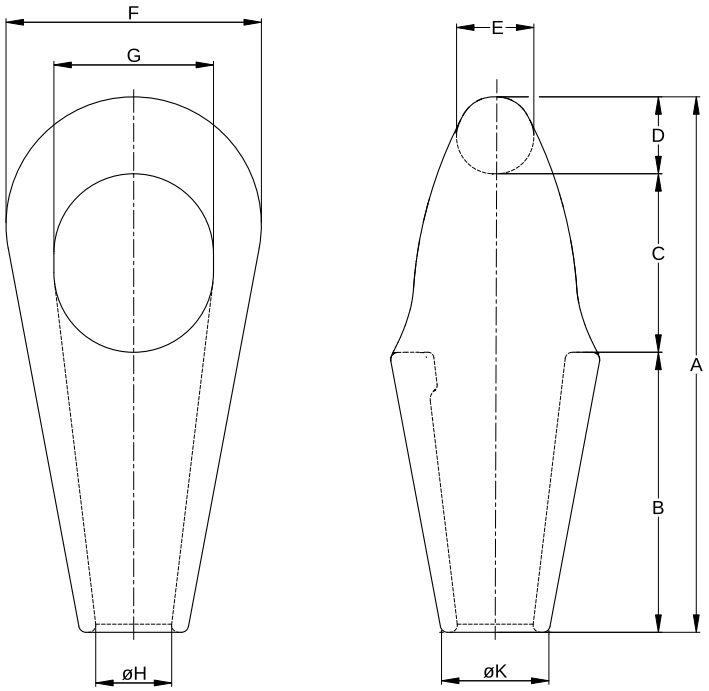

IMPERIAL

MODEL NUMBER	MBL (MTONS)	WIRE ROPE Ø (INCH)	APPROX. RESIN VOLUME (CC)	DIMENSIONS (INCH)									WEIGHT (LBS)
				A	B	C	D	E	F	G	ØH	ØK	
APS 512	130	1 1/4 - 1 3/8	350	10.63	5.55	3.46	1.57	1.42	5.51	3.23	1.61	2.36	16.8
APS 517	160	1 1/2 - 1 5/8	500	12.17	6.38	4.06	1.73	1.57	5.98	3.62	1.81	2.64	23.1
APS 519	200	1 3/4 - 1 7/8	700	14.53	7.60	4.84	2.09	1.89	6.93	4.33	2.09	2.91	35.3
APS 522	250	2 - 2 1/8	1250	16.06	8.27	5.51	2.28	2.05	7.87	4.92	2.30	3.27	47.4
APS 524	320	2 1/4 - 2 3/8	1425	17.80	9.06	6.18	2.56	2.28	8.90	5.51	2.68	3.78	68.3
APS 526	400	2 1/2 - 2 5/8	1850	19.65	9.84	6.85	2.95	2.60	9.84	6.14	2.99	4.21	91.9
APS 527	500	2 3/4 - 2 7/8	2300	21.69	11.02	7.52	3.15	2.76	10.83	6.73	3.15	4.53	121.3
APS 528	600	3 - 3 1/8	3400	23.27	12.17	7.72	3.39	2.99	11.42	7.09	3.50	4.92	153.2
APS 529	700	3 1/4 - 3 3/8	4100	25.31	13.07	8.31	3.94	3.54	11.97	7.40	3.70	5.24	184.7
APS 530	800	3 1/2 - 3 5/8	5200	26.97	14.17	8.66	4.13	3.74	13.07	8.27	3.90	5.59	240.3
APS 531	900	3 3/4 - 4	7700	28.43	14.76	9.25	4.41	3.98	14.41	8.66	4.33	6.18	299.8
APS 533	1000	4 1/4 - 4 1/2	10500	32.20	16.54	10.63	4.96	4.41	15.94	9.45	5.04	7.09	496.3
APS 540	1200	4 3/4 - 5	14000	36.22	19.29	11.42	5.51	4.96	17.72	10.87	5.51	7.87	705.5

MBL = Minimum Breaking Load | **Mtons =** Metric tonnes

FINISH Hot-dip galvanised | Primer RAL 170 60 45 (for APS 522 - APS 540)

GLOBAL ROPE FITTINGS
AQUALLINE PRODUCTS