CLOSED WEDGE SOCKETS

MORE PRODUCT INFO

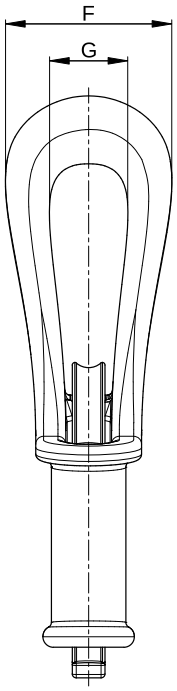

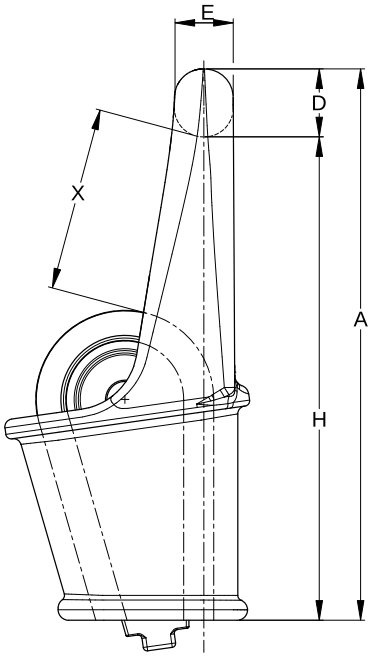

METRIC

MODEL NUMBER	MBL (MTONS)	WIRE ROPE Ø (MM)	DIMENSIONS (MM)							WEIGHT (KG)
			A	D	E	F	G	H	X	
CWS 303	40	17 - 19	317	40	36	100	42	277	100	7.5
CWS 304	55	20 - 22	368	45	40	115	50	323	110	11.5
CWS 305	80	23 - 26	422	52	45	130	60	370	125	17.4
CWS 306	100	27 - 29	473	58	50	150	65	415	140	38.7
CWS 307	120	30 - 32	519	62	55	160	72	457	160	46.2
CWS 308	130	34 - 36	580	66	60	168	76	514	175	38.4
CWS 309	160	37 - 39	620	72	66	175	82	548	190	49
CWS 310	200	40 - 42	665	80	72	195	90	585	210	62.7
CWS 311	250	43 - 48	750	90	80	220	100	660	240	93
CWS 312	300	49 - 52	820	100	90	242	110	720	260	118
CWS 313	375	54 - 58	890	106	95	255	120	784	280	170
CWS 314	450	60 - 68	1045	120	105	280	130	925	330	240
CWS 315	600	72 - 76	1200	140	120	330	150	1060	400	380
CWS 316	650	81 - 86	1340	155	130	375	170	1185	475	490

MBL = Minimum Breaking Load | **Mtons =** Metric tonnes | **X =** Depending on the actual wire rope diameter, rope construction and fill factor

FINISH Hot-dip galvanised | Primer RAL 170 60 45

GLOBAL ROPE FITTINGS
AQUALLINE PRODUCTS