CLOSED WEDGE SOCKETS

MORE PRODUCT INFO

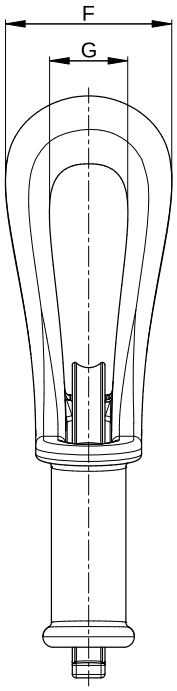

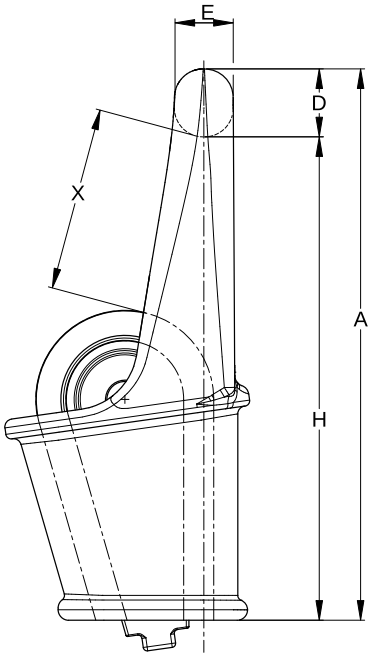

IMPERIAL

MODEL NUMBER	MBL (MTONS)	WIRE ROPE Ø (INCH)	DIMENSIONS (INCH)							WEIGHT (LBS)
			A	D	E	F	G	H	X	
CWS 303	40	3/4	12.48	1.57	1.42	3.94	1.65	10.91	3.94	16.5
CWS 304	55	7/8	14.49	1.77	1.57	4.53	1.97	12.72	4.33	25.4
CWS 305	80	1	16.61	2.05	1.77	5.12	2.36	14.57	4.92	38.4
CWS 306	100	1 1/8	18.62	2.28	1.97	5.91	2.56	16.34	5.51	85.3
CWS 307	120	1 1/4	20.43	2.44	2.17	6.30	2.83	17.99	6.30	101.9
CWS 308	130	1 3/8	22.83	2.60	2.36	6.61	2.99	20.24	6.89	84.7
CWS 309	160	1 1/2	24.41	2.83	2.60	6.89	3.23	21.57	7.48	108
CWS 310	200	1 5/8	26.18	3.15	2.83	7.68	3.54	23.03	8.27	138.2
CWS 311	250	1 3/4 - 1 7/8	29.53	3.54	3.15	8.66	3.94	25.98	9.45	205
CWS 312	300	2	32.28	3.94	3.54	9.53	4.33	28.35	10.24	260.1
CWS 313	375	2 1/4	35.04	4.17	3.74	10.04	4.72	30.87	11.02	374.8
CWS 314	450	2 1/2	41.14	4.72	4.13	11.02	5.12	36.42	12.99	529.1
CWS 315	600	3	47.24	5.51	4.72	12.99	5.91	41.73	15.75	837.8
CWS 316	650	3 1/4 - 3 3/8	52.76	6.10	5.12	14.76	6.69	46.65	18.70	1080.3

MBL = Minimum Breaking Load | **Mtons =** Metric tonnes | **X =** Depending on the actual wire rope diameter, rope construction and fill factor

FINISH Hot-dip galvanised | Primer RAL 170 60 45

GLOBAL ROPE FITTINGS
AQUALLINE PRODUCTS